Storage switches

Cluster and storage switches

NetApp
April 25, 2024

Table of Contents

Storage switches

Cisco Nexus 9336C-FX2

Overview

Overview of installation and configuration for Cisco Nexus 9336C-FX2 storage switches

The Cisco Nexus 9336C-FX2 storage switch is part of the Cisco Nexus 9000 platform and can be installed in a NetApp system cabinet. Storage switches allow you to route data between servers and storage arrays in a Storage Area Network (SAN).

Initial configuration overview

To initially configure a Cisco Nexus 9336C-FX2 switch on systems running ONTAP, follow these steps:

1. Complete cabling worksheet.
2. Install the switch.
3. Configure switch.
4. Install switch in NetApp cabinet.

   Depending on your configuration, you can install the Cisco Nexus 9336C-FX2 switch and pass-through panel in a NetApp cabinet with the standard brackets that are included with the switch.

5. Prepare to install NX-OS and RCF.
6. Install the NX-OS software.
7. Install the RCF config file.

   Install the RCF after setting up the Nexus 9336C-FX2 switch for the first time. You can also use this procedure to upgrade your RCF version.

Additional information

Before you begin installation or maintenance, be sure to review the following:

- Configuration requirements
- Components and part numbers
- Required documentation
- Smart Call Home requirements

Configuration requirements for Cisco Nexus 9336C-FX2 storage switches

For Cisco Nexus 9336C-FX2 switch installation and maintenance, be sure to review configuration and network requirements.

ONTAP support

From ONTAP 9.9.1, you can use Cisco Nexus 9336C-FX2 switches to combine storage and cluster functionality into a shared switch configuration.

If you want to build ONTAP clusters with more than two nodes, you need two supported network switches.

Configuration requirements

For configuration, you need the appropriate number and type of cables and cable connectors for your switches.

Depending on the type of switch you are initially configuring, you need to connect to the switch console port with the included console cable; you also need to provide specific network information.

Network requirements

You need the following network information for all switch configurations.

- IP subnet for management network traffic
- Host names and IP addresses for each of the storage system controllers and all applicable switches
- Most storage system controllers are managed through the e0M interface by connecting to the Ethernet service port (wrench icon). On AFF A800 and AFF A700s systems, the e0M interface uses a dedicated Ethernet port.
- Refer to the Hardware Universe for the latest information.

For more information about the initial configuration of your switch, see the following guide: Cisco Nexus 9336C-FX2 Installation and Upgrade Guide.

Components and part numbers for Cisco Nexus 9336C-FX2 storage switches

For Cisco Nexus 9336C-FX2 switch installation and maintenance, be sure to review the list of components and part numbers.

The following table lists the part number and description for the 9336C-FX2 switch, fans, and power supplies:

Part number	Description
X190200-CS-PE	N9K-9336C-FX2, CS, PTSX, 36PT10/25/40/100GQSFP28
X190200-CS-PI	N9K-9336C-FX2, CS, PSIN, 36PT10/25/40/100GQSFP28
X190210-FE-PE	N9K-9336C, FTE, PTSX, 36PT10/25/40/100GQSFP28
X190210-FE-PI	N9K-9336C, FTE, PSIN, 36PT10/25/40/100GQSFP28
X190002	Accessory Kit X190001/X190003
X-NXA-PAC-1100W-PE2	N9K-9336C AC 1100W PSU - Port side exhaust airflow
X-NXA-PAC-1100W-PI2	N9K-9336C AC 1100W PSU - Port side Intake airflow

Part number	Description
X-NXA-FAN-65CFM-PE	N9K-9336C 65CFM, Port side exhaust airflow
X-NXA-FAN-65CFM-PI	N9K-9336C 65CFM, Port side intake airflow

Documentation requirements for Cisco Nexus 9336C-FX2 storage switches

For Cisco Nexus 9336C-FX2 switch installation and maintenance, be sure to review specific switch and controller documentation to set up your Cisco 9336-FX2 switches and ONTAP cluster.

Switch documentation

To set up the Cisco Nexus 9336C-FX2 switches, you need the following documentation from the Cisco Nexus 9000 Series Switches Support page:

Document title	Description
Nexus 9000 Series Hardware Installation Guide	Provides detailed information about site requirements, switch hardware details, and installation options.
Cisco Nexus 9000 Series Switch Software Configuration Guides (choose the guide for the NX-OS release installed on your switches)	Provides initial switch configuration information that you need before you can configure the switch for ONTAP operation.
Cisco Nexus 9000 Series NX-OS Software Upgrade and Downgrade Guide (choose the guide for the NX-OS release installed on your switches)	Provides information on how to downgrade the switch to ONTAP supported switch software, if necessary.
Cisco Nexus 9000 Series NX-OS Command Reference Master Index	Provides links to the various command references provided by Cisco.
Cisco Nexus 9000 MIBs Reference	Describes the Management Information Base (MIB) files for the Nexus 9000 switches.
Nexus 9000 Series NX-OS System Message Reference	Describes the system messages for Cisco Nexus 9000 series switches, those that are informational, and others that might help diagnose problems with links, internal hardware, or the system software.
Cisco Nexus 9000 Series NX-OS Release Notes (choose the notes for the NX-OS release installed on your switches)	Describes the features, bugs, and limitations for the Cisco Nexus 9000 Series.

Document title	Description
Regulatory Compliance and Safety Information for Cisco Nexus 9000 Series	Provides international agency compliance, safety, and statutory information for the Nexus 9000 series switches.

ONTAP systems documentation

To set up an ONTAP system, you need the following documents for your version of the operating system from the ONTAP 9 Documentation Center.

Name	Description
Controller-specific *Installation and Setup Instructions*	Describes how to install NetApp hardware.
ONTAP documentation	Provides detailed information about all aspects of the ONTAP releases.
Hardware Universe	Provides NetApp hardware configuration and compatibility information.

Rail kit and cabinet documentation

To install a Cisco 9336-FX2 switch in a NetApp cabinet, see the following hardware documentation.

Name	Description
42U System Cabinet, Deep Guide	Describes the FRUs associated with the 42U system cabinet, and provides maintenance and FRU replacement instructions.
Install a Cisco 9336-FX2 switch in a NetApp Cabinet	Describes how to install a Cisco Nexus 9336C-FX2 switch in a four-post NetApp cabinet.

Smart Call Home requirements

To use Smart Call Home feature, review the following guidelines.

Smart Call Home monitors the hardware and software components on your network. When a critical system configuration occurs, it generates an email-based notification and raises an alert to all the recipients that are configured in your destination profile. To use Smart Call Home, you must configure a cluster network switch to communicate using email with the Smart Call Home system. In addition, you can optionally set up your cluster network switch to take advantage of Cisco's embedded Smart Call Home support feature.

Before you can use Smart Call Home, be aware of the following considerations:

- An email server must be in place.
- The switch must have IP connectivity to the email server.
- The contact name (SNMP server contact), phone number, and street address information must be configured. This is required to determine the origin of messages received.
- A CCO ID must be associated with an appropriate Cisco SMARTnet Service contract for your company.

- Cisco SMARTnet Service must be in place for the device to be registered.

The Cisco support site contains information about the commands to configure Smart Call Home.

Install hardware

Install the 9336C-FX2 storage switch

Follow this procedure to install the Cisco Nexus 9336C-FX2 storage switch.

What you'll need

- Access to an HTTP, FTP or TFTP server at the installation site to download the applicable NX-OS and reference configuration file (RCF) releases.
- Applicable NX-OS version, downloaded from the Cisco Software Download page.
- Applicable licenses, network and configuration information, and cables.
- Completed cabling worksheets.
- Applicable NetApp cluster network and management network RCFs downloaded from the NetApp Support Site at mysupport.netapp.com. All Cisco cluster network and management network switches arrive with the standard Cisco factory-default configuration. These switches also have the current version of the NX-OS software but do not have the RCFs loaded.
- Required switch documentation. See Required documentation for more information.

Steps

1. Rack the cluster network and management network switches and controllers.

If you are installing your…	Then…
Cisco Nexus 9336C-FX2 in a NetApp system cabinet	See Install switch in NetApp cabinet for instructions to install the switch in a NetApp cabinet.
Equipment in a Telco rack	See the procedures provided in the switch hardware installation guides and the NetApp installation and setup instructions.

2. Cable the cluster network and management network switches to the controllers using the completed cabling worksheets.
3. Power on the cluster network and management network switches and controllers.

What's next?

Go to Configure Cisco Nexus 9336C-FX2 storage switch.

Configure the 9336C-FX2 storage switch

Follow this procedure to configure the Cisco Nexus 9336C-FX2 switch.

What you'll need

- Access to an HTTP, FTP or TFTP server at the installation site to download the applicable NX-OS and reference configuration file (RCF) releases.
- Applicable NX-OS version, downloaded from the Cisco software download page.

- Applicable licenses, network and configuration information, and cables.
- Completed cabling worksheets.
- Applicable NetApp cluster network and management network RCFs downloaded from the NetApp Support Site at mysupport.netapp.com. All Cisco cluster network and management network switches arrive with the standard Cisco factory-default configuration. These switches also have the current version of the NX-OS software but do not have the RCFs loaded.
- Required switch documentation. See Required documentation for more information.

Steps

1. Perform an initial configuration of the cluster network switches.

   Provide applicable responses to the following initial setup questions when you first boot the switch. Your site's security policy defines the responses and services to enable.

Prompt	Response
Abort Auto Provisioning and continue with normal setup? (yes/no)	Respond with **yes**. The default is no.
Do you want to enforce secure password standard? (yes/no)	Respond with **yes**. The default is yes.
Enter the password for admin.	The default password is "admin"; you must create a new, strong password. A weak password can be rejected.
Would you like to enter the basic configuration dialog? (yes/no)	Respond with **yes** at the initial configuration of the switch.
Create another login account? (yes/no)	Your answer depends on your site's policies on alternate administrators. The default is **no**.
Configure read-only SNMP community string? (yes/no)	Respond with **no**. The default is no.
Configure read-write SNMP community string? (yes/no)	Respond with **no**. The default is no.
Enter the switch name.	The switch name is limited to 63 alphanumeric characters.
Continue with Out-of-band (mgmt0) management configuration? (yes/no)	Respond with **yes** (the default) at that prompt. At the mgmt0 IPv4 address: prompt, enter your IP address: ip_address.
Configure the default-gateway? (yes/no)	Respond with **yes**. At the IPv4 address of the default-gateway: prompt, enter your default_gateway.

Prompt	Response
Configure advanced IP options? (yes/no)	Respond with **no**. The default is no.
Enable the telnet service? (yes/no)	Respond with **no**. The default is no.
Enabled SSH service? (yes/no)	Respond with **yes**. The default is yes. SSH is recommended when using Cluster Switch Health Monitor (CSHM) for its log collection features. SSHv2 is also recommended for enhanced security.
Enter the type of SSH key you want to generate (dsa/rsa/rsa1).	The default is **rsa**.
Enter the number of key bits (1024-2048).	Enter the number of key bits from 1024 to 2048.
Configure the NTP server? (yes/no)	Respond with **no**. The default is no.
Configure default interface layer (L3/L2)	Respond with **L2**. The default is L2.
Configure default switch port interface state (shut/noshut)	Respond with **noshut**. The default is noshut.
Configure CoPP system profile (strict/moderate/lenient/dense)	Respond with **strict**. The default is strict.
Would you like to edit the configuration? (yes/no)	You should see the new configuration at this point. Review and make any necessary changes to the configuration you just entered. Respond with **no** at the prompt if you are satisfied with the configuration. Respond with **yes** if you want to edit your configuration settings.
Use this configuration and save it? (yes/no)	Respond with **yes** to save the configuration. This automatically updates the kickstart and system images. If you do not save the configuration at this stage, none of the changes will be in effect the next time you reboot the switch.

2. Verify the configuration choices you made in the display that appears at the end of the setup, and make sure that you save the configuration.
3. Check the version on the cluster network switches, and if necessary, download the

NetApp-supported version of the software to the switches from the Cisco software download page.

What's next?

Optionally, you can install a Cisco Nexus 9336C-FX2 switch in a NetApp cabinet. Otherwise, go to Prepare to install NX-OS and RCF.

Install a Cisco Nexus 9336C-FX2 switch in a NetApp cabinet

Depending on your configuration, you might need to install the Cisco Nexus 9336C-FX2 switch and pass-through panel in a NetApp cabinet. Standard brackets are included with the switch.

What you'll need

- For each switch, you must supply the eight 10-32 or 12-24 screws and clip nuts to mount the brackets and slider rails to the front and rear cabinet posts.
- You must use the Cisco standard rail kit to install the switch in a NetApp cabinet.

> The jumper cords are not included with the pass-through kit and should be included with your switches. If they were not shipped with the switches, you can order them from NetApp (part number X1558A-R6).

Required documentation

Review the initial preparation requirements, kit contents, and safety precautions in the Cisco Nexus 9000 Series Hardware Installation Guide.

Steps

1. Install the pass-through blanking panel in the NetApp cabinet.

   The pass-through panel kit is available from NetApp (part number X8784-R6).

   The NetApp pass-through panel kit contains the following hardware:

   - One pass-through blanking panel
   - Four 10-32 x .75 screws
   - Four 10-32 clip nuts

     a. Determine the vertical location of the switches and blanking panel in the cabinet.

        In this procedure, the blanking panel will be installed in U40.

     b. Install two clip nuts on each side in the appropriate square holes for front cabinet rails.

     c. Center the panel vertically to prevent intrusion into adjacent rack space, and then tighten the screws.

     d. Insert the female connectors of both 48-inch jumper cords from the rear of the panel and through the brush assembly.

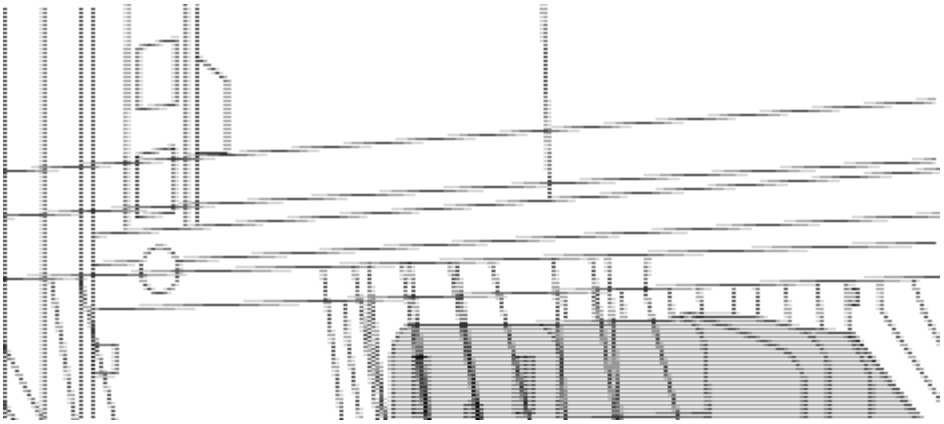

(1) Female connector of the jumper cord.

2. Install the rack-mount brackets on the Nexus 9336C-FX2 switch chassis.
   a. Position a front rack-mount bracket on one side of the switch chassis so that the mounting ear is aligned with the chassis faceplate (on the PSU or fan side), and then use four M4 screws to attach the bracket to the chassis.

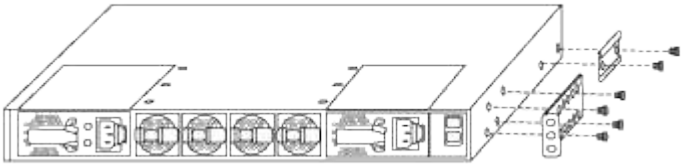

   b. Repeat step 2a with the other front rack-mount bracket on the other side of the switch.
   c. Install the rear rack-mount bracket on the switch chassis.
   d. Repeat step 2c with the other rear rack-mount bracket on the other side of the switch.
3. Install the clip nuts in the square hole locations for all four IEA posts.

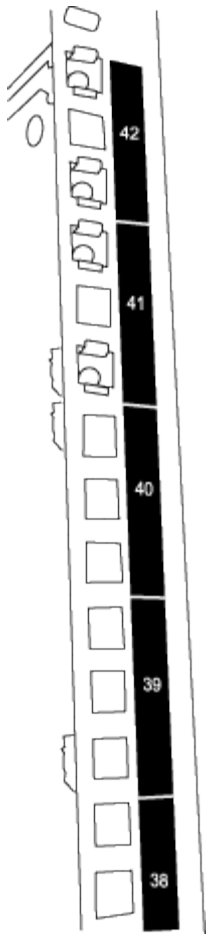

The two 9336C-FX2 switches will always be mounted in the top 2U of the cabinet RU41 and 42.

4. Install the slider rails in the cabinet.
   a. Position the first slider rail at the RU42 mark on the back side of the rear left post, insert screws with the matching thread type, and then tighten the screws with your fingers.

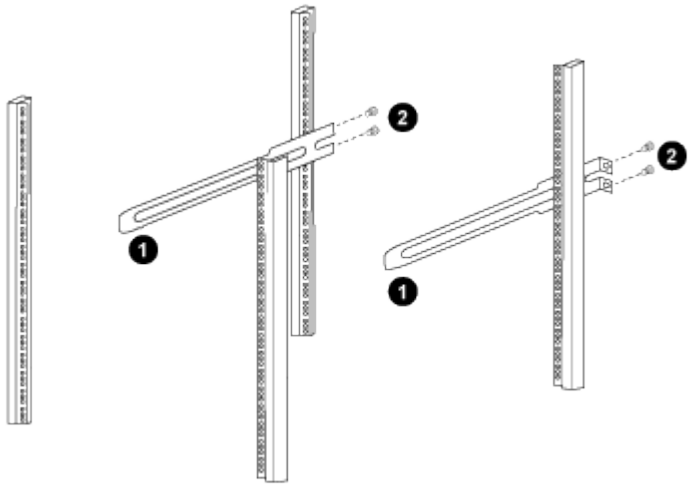

   (1) As you gently slide the slider rail, align it to the screw holes in the rack.

   (2) Tighten the screws of the slider rails to the cabinet posts.

   b. Repeat step 4a for the right side rear post.

c. Repeat steps 4a and 4b at the RU41 locations on the cabinet.

5. Install the switch in the cabinet.

> This step requires two people: one person to support the switch from the front and another to guide the switch into the rear slider rails.

a. Position the back of the switch at RU41.

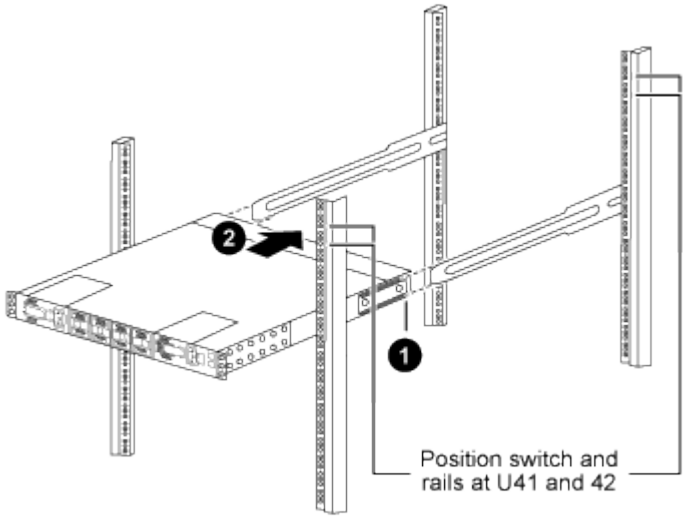

(1) As the chassis is pushed toward the rear posts, align the two rear rack-mount guides with the slider rails.

(2) Gently slide the switch until the front rack-mount brackets are flush with the front posts.

b. Attach the switch to the cabinet.

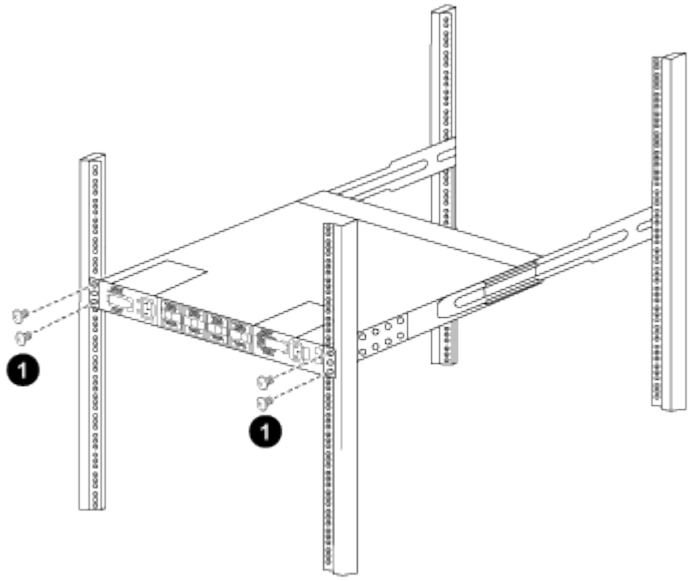

(1) With one person holding the front of the chassis level, the other person should fully tighten the four rear screws to the cabinet posts.

c. With the chassis now supported without assistance, fully tighten the front screws to the posts.

d. Repeat steps 5a through 5c for the second switch at the RU42 location.

> By using the fully installed switch as a support, it is not necessary to hold the front of the second switch during the installation process.

6. When the switches are installed, connect the jumper cords to the switch power inlets.
7. Connect the male plugs of both jumper cords to the closest available PDU outlets.

> To maintain redundancy, the two cords must be connected to different PDUs.

8. Connect the management port on each 9336C-FX2 switch to either of the management switches (if ordered) or connect them directly to your management network.

   The management port is the upper-right port located on the PSU side of the switch. The CAT6 cable for each switch needs to be routed through the pass-through panel after the switches are installed to connect to the management switches or management network.

Configure software

Software install workflow for Cisco Nexus 9336C-FX2 storage switches

To install and configure software for a Cisco Nexus 9336C-FX2 switch, follow these steps:

1. Prepare to install NX-OS and RCF.
2. Install the NX-OS software.
3. Install the RCF config file.

   Install the RCF after setting up the Nexus 9336C-FX2 switch for the first time. You can also use this procedure to upgrade your RCF version.

Prepare to install NX-OS software and RCF

Before you install the NX-OS software and the Reference Configuration File (RCF), follow this procedure.

About the examples

The examples in this procedure use the following switch and node nomenclature:

- The names of the two Cisco switches are cs1 and cs2.
- The node names are cluster1-01 and cluster1-02.
- The cluster LIF names are cluster1-01_clus1 and cluster1-01_clus2 for cluster1-01 and cluster1-02_clus1 and cluster1-02_clus2 for cluster1-02.
- The `cluster1::*>` prompt indicates the name of the cluster.

About this task

The procedure requires the use of both ONTAP commands and Cisco Nexus 9000 Series Switches commands; ONTAP commands are used unless otherwise indicated.

Steps

1. If AutoSupport is enabled on this cluster, suppress automatic case creation by invoking an AutoSupport message: `system node autosupport invoke -node * -type all -message MAINT=x h`

   where x is the duration of the maintenance window in hours.

   > The AutoSupport message notifies technical support of this maintenance task so that automatic case creation is suppressed during the maintenance window.

2. Change the privilege level to advanced, entering **y** when prompted to continue:

   ```
   set -privilege advanced
   ```

   The advanced prompt (`*>`) appears.

3. Display how many cluster interconnect interfaces are configured in each node for each cluster interconnect switch:

   ```
   network device-discovery show -protocol cdp
   ```

   Show example

   ```
   cluster1::*> network device-discovery show -protocol cdp

   Node/       Local  Discovered
   Protocol    Port   Device (LLDP: ChassisID)  Interface
   Platform
   ----------- ------ ------------------------- -----------------
   --------
   cluster1-02/cdp
               e0a    cs1                       Eth1/2            N9K-
   C9336C
               e0b    cs2                       Eth1/2            N9K-
   C9336C
   cluster1-01/cdp
               e0a    cs1                       Eth1/1            N9K-
   C9336C
               e0b    cs2                       Eth1/1            N9K-
   C9336C

   4 entries were displayed.
   ```

4. Check the administrative or operational status of each cluster interface.

   a. Display the network port attributes:

```
`network port show -ipspace Cluster`
```

Show example

```
cluster1::*> network port show -ipspace Cluster

Node: cluster1-02
                                                        Speed(Mbps)
Health
Port      IPspace      Broadcast Domain Link MTU  Admin/Oper
Status
--------- ------------ ---------------- ---- ---- -----------
------
e0a       Cluster      Cluster          up   9000  auto/10000
healthy
e0b       Cluster      Cluster          up   9000  auto/10000
healthy

Node: cluster1-01
                                                        Speed(Mbps)
Health
Port      IPspace      Broadcast Domain Link MTU  Admin/Oper
Status
--------- ------------ ---------------- ---- ---- -----------
------
e0a       Cluster      Cluster          up   9000  auto/10000
healthy
e0b       Cluster      Cluster          up   9000  auto/10000
healthy

4 entries were displayed.
```

b. Display information about the LIFs:

```
network interface show -vserver Cluster
```

Show example

```
cluster1::*> network interface show -vserver Cluster

            Logical            Status     Network
Current       Current Is
Vserver     Interface          Admin/Oper Address/Mask       Node
Port    Home
----------- ------------------ ---------- ------------------
------------- ------- ----
Cluster
            cluster1-01_clus1  up/up      169.254.209.69/16
cluster1-01   e0a     true
            cluster1-01_clus2  up/up      169.254.49.125/16
cluster1-01   e0b     true
            cluster1-02_clus1  up/up      169.254.47.194/16
cluster1-02   e0a     true
            cluster1-02_clus2  up/up      169.254.19.183/16
cluster1-02   e0b     true

4 entries were displayed.
```

5. Ping the remote cluster LIFs:

   ```
   cluster ping-cluster -node node-name
   ```

Show example

```
cluster1::*> cluster ping-cluster -node cluster1-02
Host is cluster1-02
Getting addresses from network interface table...
Cluster cluster1-01_clus1 169.254.209.69 cluster1-01     e0a
Cluster cluster1-01_clus2 169.254.49.125 cluster1-01     e0b
Cluster cluster1-02_clus1 169.254.47.194 cluster1-02     e0a
Cluster cluster1-02_clus2 169.254.19.183 cluster1-02     e0b
Local = 169.254.47.194 169.254.19.183
Remote = 169.254.209.69 169.254.49.125
Cluster Vserver Id = 4294967293
Ping status:

Basic connectivity succeeds on 4 path(s)
Basic connectivity fails on 0 path(s)

Detected 9000 byte MTU on 4 path(s):
    Local 169.254.19.183 to Remote 169.254.209.69
    Local 169.254.19.183 to Remote 169.254.49.125
    Local 169.254.47.194 to Remote 169.254.209.69
    Local 169.254.47.194 to Remote 169.254.49.125
Larger than PMTU communication succeeds on 4 path(s)
RPC status:
2 paths up, 0 paths down (tcp check)
2 paths up, 0 paths down (udp check)
```

6. Verify that the auto-revert command is enabled on all cluster LIFs:

```
network interface show -vserver Cluster -fields auto-revert
```

Show example

```
cluster1::*> network interface show -vserver Cluster -fields auto-
revert

          Logical
Vserver   Interface           Auto-revert
--------- -------------------- ------------
Cluster
          cluster1-01_clus1   true
          cluster1-01_clus2   true
          cluster1-02_clus1   true
          cluster1-02_clus2   true
4 entries were displayed.
```

7. For ONTAP 9.8 and later, enable the Ethernet switch health monitor log collection feature for collecting switch-related log files, using the commands:

   `system switch ethernet log setup-password` and `system switch ethernet log enable-collection`

Show example

```
cluster1::*> system switch ethernet log setup-password
Enter the switch name: <return>
The switch name entered is not recognized.
Choose from the following list:
cs1
cs2

cluster1::*> system switch ethernet log setup-password

Enter the switch name: cs1
RSA key fingerprint is
e5:8b:c6:dc:e2:18:18:09:36:63:d9:63:dd:03:d9:cc
Do you want to continue? {y|n}::[n] y

Enter the password: <enter switch password>
Enter the password again: <enter switch password>

cluster1::*> system switch ethernet log setup-password

Enter the switch name: cs2
RSA key fingerprint is
57:49:86:a1:b9:80:6a:61:9a:86:8e:3c:e3:b7:1f:b1
Do you want to continue? {y|n}:: [n] y

Enter the password: <enter switch password>
Enter the password again: <enter switch password>

cluster1::*> system  switch ethernet log enable-collection

Do you want to enable cluster log collection for all nodes in the
cluster?
{y|n}: [n] y

Enabling cluster switch log collection.

cluster1::*>
```

If any of these commands return an error, contact NetApp support.

8. For ONTAP releases 9.5P16, 9.6P12, and 9.7P10 and later patch releases, enable the Ethernet switch health monitor log collection feature for collecting switch-related log files, using the commands:

   `system cluster-switch log setup-password` and `system cluster-switch log enable-`

```
collection
```

Show example

```
cluster1::*> system cluster-switch log setup-password
Enter the switch name: <return>
The switch name entered is not recognized.
Choose from the following list:
cs1
cs2

cluster1::*> system cluster-switch log setup-password

Enter the switch name: cs1
RSA key fingerprint is
e5:8b:c6:dc:e2:18:18:09:36:63:d9:63:dd:03:d9:cc
Do you want to continue? {y|n}::[n] y

Enter the password: <enter switch password>
Enter the password again: <enter switch password>

cluster1::*> system cluster-switch log setup-password

Enter the switch name: cs2
RSA key fingerprint is
57:49:86:a1:b9:80:6a:61:9a:86:8e:3c:e3:b7:1f:b1
Do you want to continue? {y|n}:: [n] y

Enter the password: <enter switch password>
Enter the password again: <enter switch password>

cluster1::*> system cluster-switch log enable-collection

Do you want to enable cluster log collection for all nodes in the
cluster?
{y|n}: [n] y

Enabling cluster switch log collection.

cluster1::*>
```

If any of these commands return an error, contact NetApp support.

What's next?

Install the NX-OS software.

Install the NX-OS software

Follow this procedure to install the NX-OS software on the Nexus 9336C-FX2 cluster switch.

Before you begin, complete the procedure in Prepare to install NX-OS and RCF.

Review requirements

What you'll need

- A current backup of the switch configuration.
- A fully functioning cluster (no errors in the logs or similar issues).
- Cisco Ethernet switch page. Consult the switch compatibility table for the supported ONTAP and NX-OS versions.
- Appropriate software and upgrade guides available on the Cisco web site for the Cisco switch upgrade and downgrade procedures. See Cisco Nexus 9000 Series Switches.

About the examples

The examples in this procedure use the following switch and node nomenclature:

- The names of the two Cisco switches are cs1 and cs2.
- The node names are cluster1-01, cluster1-02, cluster1-03, and cluster1-04.
- The cluster LIF names are cluster1-01_clus1, cluster1-01_clus2, cluster1-02_clus1, cluster1-02_clus2 , cluster1-03_clus1, cluster1-03_clus2, cluster1-04_clus1, and cluster1-04_clus2.
- The `cluster1::*>` prompt indicates the name of the cluster.

Install the software

The procedure requires the use of both ONTAP commands and Cisco Nexus 9000 Series Switches commands; ONTAP commands are used unless otherwise indicated.

Steps

1. Connect the cluster switch to the management network.
2. Use the ping command to verify connectivity to the server hosting the NX-OS software and the RCF.

   Show example

   This example verifies that the switch can reach the server at IP address 172.19.2.1:

   ```
   cs2# ping 172.19.2.1
   Pinging 172.19.2.1 with 0 bytes of data:

   Reply From 172.19.2.1: icmp_seq = 0. time= 5910 usec.
   ```

3. Copy the NX-OS software and EPLD images to the Nexus 9336C-FX2 switch.

Show example

```
cs2# copy sftp: bootflash: vrf management
Enter source filename: /code/nxos.9.3.5.bin
Enter hostname for the sftp server: 172.19.2.1
Enter username: user1

Outbound-ReKey for 172.19.2.1:22
Inbound-ReKey for 172.19.2.1:22
user1@172.19.2.1's password:
sftp> progress
Progress meter enabled
sftp> get   /code/nxos.9.3.5.bin  /bootflash/nxos.9.3.5.bin
/code/nxos.9.3.5.bin  100% 1261MB   9.3MB/s   02:15
sftp> exit
Copy complete, now saving to disk (please wait)...
Copy complete.


cs2# copy sftp: bootflash: vrf management

Enter source filename: /code/n9000-epld.9.3.5.img
Enter hostname for the sftp server: 172.19.2.1
Enter username: user1

Outbound-ReKey for 172.19.2.1:22
Inbound-ReKey for 172.19.2.1:22
user1@172.19.2.1's password:
sftp> progress
Progress meter enabled
sftp> get   /code/n9000-epld.9.3.5.img  /bootflash/n9000-
epld.9.3.5.img
/code/n9000-epld.9.3.5.img  100%  161MB   9.5MB/s   00:16
sftp> exit
Copy complete, now saving to disk (please wait)...
Copy complete.
```

4. Verify the running version of the NX-OS software:

```
show version
```

Show example

```
cs2# show version
Cisco Nexus Operating System (NX-OS) Software
TAC support: http://www.cisco.com/tac
Copyright (C) 2002-2020, Cisco and/or its affiliates.
All rights reserved.
The copyrights to certain works contained in this software are
owned by other third parties and used and distributed under their
own
licenses, such as open source.  This software is provided "as is,"
and unless
otherwise stated, there is no warranty, express or implied,
including but not
limited to warranties of merchantability and fitness for a
particular purpose.
Certain components of this software are licensed under
the GNU General Public License (GPL) version 2.0 or
GNU General Public License (GPL) version 3.0  or the GNU
Lesser General Public License (LGPL) Version 2.1 or
Lesser General Public License (LGPL) Version 2.0.
A copy of each such license is available at
http://www.opensource.org/licenses/gpl-2.0.php and
http://opensource.org/licenses/gpl-3.0.html and
http://www.opensource.org/licenses/lgpl-2.1.php and
http://www.gnu.org/licenses/old-licenses/library.txt.

Software
  BIOS: version 08.38
  NXOS: version 9.3(4)
  BIOS compile time:  05/29/2020
  NXOS image file is: bootflash:///nxos.9.3.4.bin
  NXOS compile time:  4/28/2020 21:00:00 [04/29/2020 02:28:31]


Hardware
  cisco Nexus9000 C9336C-FX2 Chassis
  Intel(R) Xeon(R) CPU E5-2403 v2 @ 1.80GHz with 8154432 kB of
memory.
  Processor Board ID FOC20291J6K

  Device name: cs2
  bootflash:   53298520 kB
Kernel uptime is 0 day(s), 0 hour(s), 3 minute(s), 42 second(s)
```

```
Last reset at 157524 usecs after Mon Nov  2 18:32:06 2020
  Reason: Reset Requested by CLI command reload
  System version: 9.3(4)
  Service:

plugin
  Core Plugin, Ethernet Plugin

Active Package(s):


cs2#
```

5. Install the NX-OS image.

   Installing the image file causes it to be loaded every time the switch is rebooted.

Show example

```
cs2# install all nxos bootflash:nxos.9.3.5.bin

Installer will perform compatibility check first. Please wait.
Installer is forced disruptive

Verifying image bootflash:/nxos.9.3.5.bin for boot variable "nxos".
[####################] 100% -- SUCCESS

Verifying image type.
[####################] 100% -- SUCCESS

Preparing "nxos" version info using image bootflash:/nxos.9.3.5.bin.
[####################] 100% -- SUCCESS

Preparing "bios" version info using image bootflash:/nxos.9.3.5.bin.
[####################] 100% -- SUCCESS

Performing module support checks.
[####################] 100% -- SUCCESS

Notifying services about system upgrade.
[####################] 100% -- SUCCESS



Compatibility check is done:
Module  bootable       Impact     Install-type  Reason
------  --------  --------------- ------------  ------
  1       yes      disruptive         reset     default upgrade is
not hitless



Images will be upgraded according to following table:

Module   Image    Running-Version(pri:alt                  New-
Version         Upg-Required
------- --------- ----------------------------------------
------------------- ------------
  1      nxos     9.3(4)                                   9.3(5)
yes
  1      bios     v08.37(01/28/2020):v08.23(09/23/2015)
v08.38(05/29/2020)      yes
```

```
Switch will be reloaded for disruptive upgrade.

Do you want to continue with the installation (y/n)? [n] y

Install is in progress, please wait.

Performing runtime checks.
[####################] 100% -- SUCCESS

Setting boot variables.
[####################] 100% -- SUCCESS

Performing configuration copy.
[####################] 100% -- SUCCESS

Module 1: Refreshing compact flash and upgrading
bios/loader/bootrom.
Warning: please do not remove or power off the module at this time.
[####################] 100% -- SUCCESS

Finishing the upgrade, switch will reboot in 10 seconds.
```

6. Verify the new version of NX-OS software after the switch has rebooted:

```
show version
```

Show example

```
cs2# show version

Cisco Nexus Operating System (NX-OS) Software
TAC support: http://www.cisco.com/tac
Copyright (C) 2002-2020, Cisco and/or its affiliates.
All rights reserved.
The copyrights to certain works contained in this software are
owned by other third parties and used and distributed under their
own
licenses, such as open source.  This software is provided "as is,"
and unless
otherwise stated, there is no warranty, express or implied,
including but not
limited to warranties of merchantability and fitness for a
particular purpose.
Certain components of this software are licensed under
the GNU General Public License (GPL) version 2.0 or
GNU General Public License (GPL) version 3.0  or the GNU
Lesser General Public License (LGPL) Version 2.1 or
Lesser General Public License (LGPL) Version 2.0.
A copy of each such license is available at
http://www.opensource.org/licenses/gpl-2.0.php and
http://opensource.org/licenses/gpl-3.0.html and
http://www.opensource.org/licenses/lgpl-2.1.php and
http://www.gnu.org/licenses/old-licenses/library.txt.

Software
  BIOS: version 05.33
  NXOS: version 9.3(5)
  BIOS compile time:  09/08/2018
  NXOS image file is: bootflash:///nxos.9.3.5.bin
  NXOS compile time:  11/4/2018 21:00:00 [11/05/2018 06:11:06]


Hardware
  cisco Nexus9000 C9336C-FX2 Chassis
  Intel(R) Xeon(R) CPU E5-2403 v2 @ 1.80GHz with 8154432 kB of
memory.
  Processor Board ID FOC20291J6K

  Device name: cs2
  bootflash:   53298520 kB
Kernel uptime is 0 day(s), 0 hour(s), 3 minute(s), 42 second(s)
```

```
Last reset at 277524 usecs after Mon Nov  2 22:45:12 2020
  Reason: Reset due to upgrade
  System version: 9.3(4)
  Service:

plugin
  Core Plugin, Ethernet Plugin

Active Package(s):
```

7. Upgrade the EPLD image and reboot the switch.

Show example

```
cs2# show version module 1 epld

EPLD Device                      Version
---------------------------------------
MI   FPGA                         0x7
IO   FPGA                         0x17
MI   FPGA2                        0x2
GEM  FPGA                         0x2
GEM  FPGA                         0x2
GEM  FPGA                         0x2
GEM  FPGA                         0x2

cs2# install epld bootflash:n9000-epld.9.3.5.img module 1
Compatibility check:
Module        Type         Upgradable        Impact   Reason
------  ------------------ ----------------- --------- -----
     1         SUP         Yes       disruptive  Module Upgradable

Retrieving EPLD versions.... Please wait.
Images will be upgraded according to following table:
Module  Type   EPLD              Running-Version   New-Version  Upg-
Required
------- ------ ----------------- ----------------- ------------
------------
     1  SUP    MI FPGA           0x07              0x07         No
     1  SUP    IO FPGA           0x17              0x19         Yes
     1  SUP    MI FPGA2          0x02              0x02         No
The above modules require upgrade.
The switch will be reloaded at the end of the upgrade
Do you want to continue (y/n) ?  [n] y

Proceeding to upgrade Modules.

Starting Module 1 EPLD Upgrade

Module 1 : IO FPGA [Programming] : 100.00% (     64 of      64
sectors)
Module 1 EPLD upgrade is successful.
Module   Type  Upgrade-Result
-------- ----- --------------
     1   SUP   Success

EPLDs upgraded.

Module 1 EPLD upgrade is successful.
```

8. After the switch reboot, log in again and verify that the new version of EPLD loaded successfully.

   Show example

```
cs2# show version module 1 epld

EPLD Device                      Version
---------------------------------------
MI   FPGA                         0x7
IO   FPGA                         0x19
MI   FPGA2                        0x2
GEM  FPGA                         0x2
GEM  FPGA                         0x2
GEM  FPGA                         0x2
GEM  FPGA                         0x2
```

9. Repeat steps 1 to 8 to install the NX-OS software on switch cs1.

What's next?

Install RCF config file.

Install the Reference Configuration File (RCF)

You can install the RCF after setting up the Nexus 9336C-FX2 switch for the first time. You can also use this procedure to upgrade your RCF version.

Before you begin, complete the procedure in Prepare to install NX-OS and RCF.

Review requirements

What you'll need

- A current backup of the switch configuration.
- A fully functioning cluster (no errors in the logs or similar issues).
- The current RCF file.
- A console connection to the switch, required when installing the RCF.

Suggested documentation

- Cisco Ethernet switch page Consult the switch compatibility table for the supported ONTAP and RCF versions. Note that there can be command dependencies between the command syntax in the RCF and that found in versions of NX-OS.
- Cisco Nexus 3000 Series Switches. Refer to the appropriate software and upgrade guides available on the Cisco web site for complete documentation on the Cisco switch upgrade and downgrade procedures.

Install the RCF

About the examples

The examples in this procedure use the following switch and node nomenclature:

- The names of the two Cisco switches are cs1 and cs2.
- The node names are cluster1-01, cluster1-02, cluster1-03, and cluster1-04.
- The cluster LIF names are cluster1-01_clus1, cluster1-01_clus2, cluster1-02_clus1, cluster1-02_clus2 , cluster1-03_clus1, cluster1-03_clus2, cluster1-04_clus1, and cluster1-04_clus2.
- The `cluster1::*>` prompt indicates the name of the cluster.

The examples in this procedure use two nodes. These nodes use two 10GbE cluster interconnect ports e0a and e0b. See the Hardware Universe to verify the correct cluster ports on your platforms.

> The command outputs might vary depending on different releases of ONTAP.

About this task

The procedure requires the use of both ONTAP commands and Cisco Nexus 9000 Series Switches commands; ONTAP commands are used unless otherwise indicated.

No operational inter-switch link (ISL) is needed during this procedure. This is by design because RCF version changes can affect ISL connectivity temporarily. To ensure non-disruptive cluster operations, the following procedure migrates all of the cluster LIFs to the operational partner switch while performing the steps on the target switch.

> Before installing a new switch software version and RCFs, you must erase the switch settings and perform basic configuration. You must be connected to the switch using the serial console. This task resets the configuration of the management network.

Step 1: Prepare for the installation

1. Display the cluster ports on each node that are connected to the cluster switches:

   ```
   network device-discovery show
   ```

Show example

```
cluster1::*> network device-discovery show
Node/       Local  Discovered
Protocol    Port   Device (LLDP: ChassisID)  Interface
Platform
----------- ------ ------------------------- ----------------
--------
cluster1-01/cdp
            e0a    cs1                       Ethernet1/7       N9K-
C9336C
            e0d    cs2                       Ethernet1/7       N9K-
C9336C
cluster1-02/cdp
            e0a    cs1                       Ethernet1/8       N9K-
C9336C
            e0d    cs2                       Ethernet1/8       N9K-
C9336C
cluster1-03/cdp
            e0a    cs1                       Ethernet1/1/1     N9K-
C9336C
            e0b    cs2                       Ethernet1/1/1     N9K-
C9336C
cluster1-04/cdp
            e0a    cs1                       Ethernet1/1/2     N9K-
C9336C
            e0b    cs2                       Ethernet1/1/2     N9K-
C9336C
cluster1::*>
```

2. Check the administrative and operational status of each cluster port.
   a. Verify that all the cluster ports are **up** with a healthy status:

      `network port show -role cluster`

Show example

```
cluster1::*> network port show -role cluster

Node: cluster1-01

Ignore
                                                        Speed(Mbps)
Health   Health
Port      IPspace      Broadcast Domain Link MTU  Admin/Oper
Status   Status
--------- ------------ ---------------- ---- ---- -----------
-------- ------
e0a       Cluster      Cluster          up   9000  auto/100000
healthy false
e0d       Cluster      Cluster          up   9000  auto/100000
healthy false

Node: cluster1-02

Ignore
                                                        Speed(Mbps)
Health   Health
Port      IPspace      Broadcast Domain Link MTU  Admin/Oper
Status   Status
--------- ------------ ---------------- ---- ---- -----------
-------- ------
e0a       Cluster      Cluster          up   9000  auto/100000
healthy false
e0d       Cluster      Cluster          up   9000  auto/100000
healthy false
8 entries were displayed.

Node: cluster1-03

   Ignore
                                                        Speed(Mbps)
Health   Health
Port      IPspace      Broadcast Domain Link MTU  Admin/Oper
Status   Status
--------- ------------ ---------------- ---- ---- -----------
-------- ------
e0a       Cluster      Cluster          up   9000  auto/10000
healthy  false
e0b       Cluster      Cluster          up   9000  auto/10000
healthy  false
```

```
Node: cluster1-04

Ignore
                                                          Speed(Mbps)
Health   Health
Port      IPspace      Broadcast Domain Link MTU  Admin/Oper
Status   Status
--------- ------------ ---------------- ---- ---- -----------
-------- ------
e0a       Cluster      Cluster          up   9000  auto/10000
healthy  false
e0b       Cluster      Cluster          up   9000  auto/10000
healthy  false
cluster1::*>
```

b. Verify that all the cluster interfaces (LIFs) are on the home port:

```
network interface show -role cluster
```

Show example

```
cluster1::*> network interface show -role cluster
            Logical            Status     Network
Current      Current Is
Vserver     Interface          Admin/Oper Address/Mask      Node
Port    Home
----------- ------------------ ---------- -----------------
------------ ------- ----
Cluster
            cluster1-01_clus1  up/up     169.254.3.4/23
cluster1-01  e0a     true
            cluster1-01_clus2  up/up     169.254.3.5/23
cluster1-01  e0d     true
            cluster1-02_clus1  up/up     169.254.3.8/23
cluster1-02  e0a     true
            cluster1-02_clus2  up/up     169.254.3.9/23
cluster1-02  e0d     true
            cluster1-03_clus1  up/up     169.254.1.3/23
cluster1-03  e0a     true
            cluster1-03_clus2  up/up     169.254.1.1/23
cluster1-03  e0b     true
            cluster1-04_clus1  up/up     169.254.1.6/23
cluster1-04  e0a     true
            cluster1-04_clus2  up/up     169.254.1.7/23
cluster1-04  e0b     true
8 entries were displayed.
cluster1::*>
```

c. Verify that the cluster displays information for both cluster switches:

```
system cluster-switch show -is-monitoring-enabled-operational true
```

Show example

```
cluster1::*> system cluster-switch show -is-monitoring-enabled
-operational true
Switch                      Type               Address
Model
--------------------------- ------------------ ----------------
-----
cs1                         cluster-network    10.233.205.90
N9K-C9336C
     Serial Number: FOCXXXXXXGD
      Is Monitored: true
            Reason: None
  Software Version: Cisco Nexus Operating System (NX-OS)
Software, Version
                    9.3(5)
    Version Source: CDP

cs2                         cluster-network    10.233.205.91
N9K-C9336C
     Serial Number: FOCXXXXXXGS
      Is Monitored: true
            Reason: None
  Software Version: Cisco Nexus Operating System (NX-OS)
Software, Version
                    9.3(5)
    Version Source: CDP
cluster1::*>
```

3. Disable auto-revert on the cluster LIFs.

Show example

```
cluster1::*> network interface modify -vserver Cluster -lif * -auto
-revert false
```

Step 2: Configure ports

1. On cluster switch cs2, shut down the ports connected to the cluster ports of the nodes.

Show example

```
cs2(config)# interface eth1/1/1-2,eth1/7-8
cs2(config-if-range)# shutdown
```

2. Verify that the cluster LIFs have migrated to the ports hosted on cluster switch cs1. This might take a few seconds.

```
network interface show -role cluster
```

Show example

```
cluster1::*> network interface show -role cluster
            Logical           Status     Network            Current
Current Is
Vserver     Interface         Admin/Oper Address/Mask       Node
Port    Home
----------- ----------------- ---------- ------------------
------------- ------- ----
Cluster
            cluster1-01_clus1 up/up      169.254.3.4/23
cluster1-01   e0a     true
            cluster1-01_clus2 up/up      169.254.3.5/23
cluster1-01   e0a     false
            cluster1-02_clus1 up/up      169.254.3.8/23
cluster1-02   e0a     true
            cluster1-02_clus2 up/up      169.254.3.9/23
cluster1-02   e0a     false
            cluster1-03_clus1 up/up      169.254.1.3/23
cluster1-03   e0a     true
            cluster1-03_clus2 up/up      169.254.1.1/23
cluster1-03   e0a     false
            cluster1-04_clus1 up/up      169.254.1.6/23
cluster1-04   e0a     true
            cluster1-04_clus2 up/up      169.254.1.7/23
cluster1-04   e0a     false
8 entries were displayed.
cluster1::*>
```

3. Verify that the cluster is healthy:

```
cluster show
```

Show example

```
cluster1::*> cluster show
Node                  Health  Eligibility   Epsilon
--------------------- ------- ------------  -------
cluster1-01           true    true          false
cluster1-02           true    true          false
cluster1-03           true    true          true
cluster1-04           true    true          false
4 entries were displayed.
cluster1::*>
```

4. If you have not already done so, save a copy of the current switch configuration by copying the output of the following command to a text file:

```
show running-config
```

5. Clean the configuration on switch cs2 and perform a basic setup.

> When updating or applying a new RCF, you must erase the switch settings and perform basic configuration. You must be connected to the switch serial console port to set up the switch again.

a. Clean the configuration:

Show example

```
(cs2)# write erase

Warning: This command will erase the startup-configuration.

Do you wish to proceed anyway? (y/n)  [n]  y
```

b. Perform a reboot of the switch:

Show example

```
(cs2)# reload

Are you sure you would like to reset the system? (y/n) y
```

6. Copy the RCF to the bootflash of switch cs2 using one of the following transfer protocols: FTP, TFTP, SFTP, or SCP. For more information on Cisco commands, see the appropriate guide in the Cisco Nexus 9000 Series NX-OS Command Reference guides.

   Show example

   This example shows TFTP being used to copy an RCF to the bootflash on switch cs2:

   ```
   cs2# copy tftp: bootflash: vrf management
   Enter source filename: Nexus_9336C_RCF_v1.6-Cluster-HA-Breakout.txt
   Enter hostname for the tftp server: 172.22.201.50
   Trying to connect to tftp server......Connection to Server
   Established.
   TFTP get operation was successful
   Copy complete, now saving to disk (please wait)...
   ```

7. Apply the RCF previously downloaded to the bootflash.

   For more information on Cisco commands, see the appropriate guide in the Cisco Nexus 9000 Series NX-OS Command Reference guides.

   Show example

   This example shows the RCF file `Nexus_9336C_RCF_v1.6-Cluster-HA-Breakout.txt` being installed on switch cs2:

   ```
   cs2# copy Nexus_9336C_RCF_v1.6-Cluster-HA-Breakout.txt running-
   config echo-commands
   ```

8. Examine the banner output from the `show banner motd` command. You must read and follow these instructions to ensure the proper configuration and operation of the switch.

Show example

```
cs2# show banner motd

*********************************************************************
**********
* NetApp Reference Configuration File (RCF)
*
* Switch   : Nexus N9K-C9336C-FX2
* Filename : Nexus_9336C_RCF_v1.6-Cluster-HA-Breakout.txt
* Date     : 10-23-2020
* Version  : v1.6
*
* Port Usage:
* Ports  1- 3: Breakout mode (4x10G) Intra-Cluster Ports, int
e1/1/1-4, e1/2/1-4
, e1/3/1-4
* Ports  4- 6: Breakout mode (4x25G) Intra-Cluster/HA Ports, int
e1/4/1-4, e1/5/
1-4, e1/6/1-4
* Ports  7-34: 40/100GbE Intra-Cluster/HA Ports, int e1/7-34
* Ports 35-36: Intra-Cluster ISL Ports, int e1/35-36
*
* Dynamic breakout commands:
* 10G: interface breakout module 1 port <range> map 10g-4x
* 25G: interface breakout module 1 port <range> map 25g-4x
*
* Undo breakout commands and return interfaces to 40/100G
configuration in confi
g mode:
* no interface breakout module 1 port <range> map 10g-4x
* no interface breakout module 1 port <range> map 25g-4x
* interface Ethernet <interfaces taken out of breakout mode>
* inherit port-profile 40-100G
* priority-flow-control mode auto
* service-policy input HA
* exit
*
*********************************************************************
**********
```

9. Verify that the RCF file is the correct newer version:

```
show running-config
```

When you check the output to verify you have the correct RCF, make sure that the following information is correct:

- The RCF banner
- The node and port settings
- Customizations

  The output varies according to your site configuration. Check the port settings and refer to the release notes for any changes specific to the RCF that you have installed.

10. After you verify the RCF versions and switch settings are correct, copy the running-config file to the startup-config file.

    For more information on Cisco commands, see the appropriate guide in the Cisco Nexus 9000 Series NX-OS Command Reference guides.

    Show example

    ```
    cs2# copy running-config startup-config
    [#########################################] 100% Copy complete
    ```

11. Reboot switch cs2. You can ignore the “cluster ports down” events reported on the nodes while the switch reboots.

    Show example

    ```
    cs2# reload
    This command will reboot the system. (y/n)?  [n] y
    ```

12. Verify the health of cluster ports on the cluster.

    a. Verify that e0d ports are up and healthy across all nodes in the cluster:

    ```
    network port show -role cluster
    ```

Show example

```
cluster1::*> network port show -role cluster

Node: cluster1-01

Ignore
                                                        Speed(Mbps)
Health   Health
Port      IPspace      Broadcast Domain Link MTU  Admin/Oper
Status   Status
--------- ------------ ---------------- ---- ---- -----------
-------- ------
e0a       Cluster      Cluster          up   9000  auto/10000
healthy  false
e0b       Cluster      Cluster          up   9000  auto/10000
healthy  false

Node: cluster1-02

Ignore
                                                        Speed(Mbps)
Health   Health
Port      IPspace      Broadcast Domain Link MTU  Admin/Oper
Status   Status
--------- ------------ ---------------- ---- ---- -----------
-------- ------
e0a       Cluster      Cluster          up   9000  auto/10000
healthy  false
e0b       Cluster      Cluster          up   9000  auto/10000
healthy  false

Node: cluster1-03

Ignore
                                                        Speed(Mbps)
Health   Health
Port      IPspace      Broadcast Domain Link MTU  Admin/Oper
Status   Status
--------- ------------ ---------------- ---- ---- -----------
-------- ------
e0a       Cluster      Cluster          up   9000  auto/100000
healthy false
e0d       Cluster      Cluster          up   9000  auto/100000
healthy false
```

```
Node: cluster1-04

Ignore
                                                          Speed(Mbps)
Health   Health
Port      IPspace      Broadcast Domain Link MTU  Admin/Oper
Status   Status
--------- ------------ ---------------- ---- ---- -----------
-------- ------
e0a       Cluster      Cluster          up   9000  auto/100000
healthy false
e0d       Cluster      Cluster          up   9000  auto/100000
healthy false
8 entries were displayed.
```

b. Verify the switch health from the cluster (this might not show switch cs2, since LIFs are not homed on e0d).

Show example

```
cluster1::*> network device-discovery show -protocol cdp
Node/       Local  Discovered
Protocol    Port   Device (LLDP: ChassisID)  Interface
Platform
----------- ------ ------------------------- -----------------
--------
cluster1-01/cdp
            e0a    cs1                       Ethernet1/7
N9K-C9336C
            e0d    cs2                       Ethernet1/7
N9K-C9336C
cluster01-2/cdp
            e0a    cs1                       Ethernet1/8
N9K-C9336C
            e0d    cs2                       Ethernet1/8
N9K-C9336C
cluster01-3/cdp
            e0a    cs1                       Ethernet1/1/1
N9K-C9336C
            e0b    cs2                       Ethernet1/1/1
N9K-C9336C
cluster1-04/cdp
            e0a    cs1                       Ethernet1/1/2
N9K-C9336C
            e0b    cs2                       Ethernet1/1/2
N9K-C9336C

cluster1::*> system cluster-switch show -is-monitoring-enabled
-operational true
Switch                      Type               Address
Model
--------------------------- ------------------ ----------------
-----
cs1                         cluster-network    10.233.205.90
NX9-C9336C
     Serial Number: FOCXXXXXXGD
      Is Monitored: true
            Reason: None
  Software Version: Cisco Nexus Operating System (NX-OS)
Software, Version
                    9.3(5)
    Version Source: CDP

cs2                         cluster-network    10.233.205.91
```

```
NX9-C9336C
     Serial Number: FOCXXXXXXGS
      Is Monitored: true
            Reason: None
  Software Version: Cisco Nexus Operating System (NX-OS)
Software, Version
                    9.3(5)
    Version Source: CDP

2 entries were displayed.
```

You might observe the following output on the cs1 switch console depending on the RCF version previously loaded on the switch:

```
2020 Nov 17 16:07:18 cs1 %$ VDC-1 %$ %STP-2-UNBLOCK_CONSIST_PORT:
Unblocking port port-channel1 on VLAN0092. Port consistency
restored.
2020 Nov 17 16:07:23 cs1 %$ VDC-1 %$ %STP-2-BLOCK_PVID_PEER:
Blocking port-channel1 on VLAN0001. Inconsistent peer vlan.
2020 Nov 17 16:07:23 cs1 %$ VDC-1 %$ %STP-2-BLOCK_PVID_LOCAL:
Blocking port-channel1 on VLAN0092. Inconsistent local vlan.
```

13. On cluster switch cs1, shut down the ports connected to the cluster ports of the nodes.

Show example

The following example uses the interface example output:

```
cs1(config)# interface eth1/1/1-2,eth1/7-8
cs1(config-if-range)# shutdown
```

14. Verify that the cluster LIFs have migrated to the ports hosted on switch cs2. This might take a few seconds.

```
network interface show -role cluster
```

Show example

```
cluster1::*> network interface show -role cluster
            Logical            Status     Network            Current
Current Is
Vserver     Interface          Admin/Oper Address/Mask       Node
Port    Home
----------- ------------------ ---------- ------------------
------------------- ------- ----
Cluster
            cluster1-01_clus1  up/up      169.254.3.4/23
cluster1-01         e0d     false
            cluster1-01_clus2  up/up      169.254.3.5/23
cluster1-01         e0d     true
            cluster1-02_clus1  up/up      169.254.3.8/23
cluster1-02         e0d     false
            cluster1-02_clus2  up/up      169.254.3.9/23
cluster1-02         e0d     true
            cluster1-03_clus1  up/up      169.254.1.3/23
cluster1-03         e0b     false
            cluster1-03_clus2  up/up      169.254.1.1/23
cluster1-03         e0b     true
            cluster1-04_clus1  up/up      169.254.1.6/23
cluster1-04         e0b     false
            cluster1-04_clus2  up/up      169.254.1.7/23
cluster1-04         e0b     true
8 entries were displayed.
cluster1::*>
```

15. Verify that the cluster is healthy:

```
cluster show
```

Show example

```
cluster1::*> cluster show
Node                  Health   Eligibility   Epsilon
--------------------- -------- ------------- -------
cluster1-01           true     true          false
cluster1-02           true     true          false
cluster1-03           true     true          true
cluster1-04           true     true          false
4 entries were displayed.
cluster1::*>
```

16. Repeat steps 4 to 11 on switch cs1.
17. Enable auto-revert on the cluster LIFs.

Show example

```
cluster1::*> network interface modify -vserver Cluster -lif * -auto
-revert True
```

18. Reboot switch cs1. You do this to trigger the cluster LIFs to revert to their home ports. You can ignore the “cluster ports down” events reported on the nodes while the switch reboots.

Show example

```
cs1# reload
This command will reboot the system. (y/n)?  [n] y
```

Step 3: Verify the configuration

1. Verify that the switch ports connected to the cluster ports are **up**.

```
show interface brief
```

Show example

```
cs1# show interface brief | grep up
.
.
Eth1/1/1      1       eth  access up      none
10G(D) --
Eth1/1/2      1       eth  access up      none
10G(D) --
Eth1/7        1       eth  trunk  up      none
100G(D) --
Eth1/8        1       eth  trunk  up      none
100G(D) --
.
.
```

2. Verify that the expected nodes are still connected:

```
show cdp neighbors
```

Show example

```
cs1# show cdp neighbors

Capability Codes: R - Router, T - Trans-Bridge, B - Source-Route-
Bridge
                  S - Switch, H - Host, I - IGMP, r - Repeater,
                  V - VoIP-Phone, D - Remotely-Managed-Device,
                  s - Supports-STP-Dispute

Device-ID          Local Intrfce  Hldtme Capability  Platform
Port ID
node1              Eth1/1         133    H           FAS2980
e0a
node2              Eth1/2         133    H           FAS2980
e0a
cs2                Eth1/35        175    R S I s     N9K-C9336C
Eth1/35
cs2                Eth1/36        175    R S I s     N9K-C9336C
Eth1/36

Total entries displayed: 4
```

3. Verify that the cluster nodes are in their correct cluster VLANs using the following commands:

```
show vlan brief

show interface trunk
```

Show example

```
cs1# show vlan brief

VLAN Name                             Status    Ports
---- -------------------------------- ---------
-------------------------------
1    default                          active    Po1, Eth1/1, Eth1/2,
Eth1/3
                                               Eth1/4, Eth1/5,
Eth1/6, Eth1/7
                                               Eth1/8, Eth1/35,
Eth1/36
                                               Eth1/9/1, Eth1/9/2,
Eth1/9/3
                                               Eth1/9/4, Eth1/10/1,
Eth1/10/2
                                               Eth1/10/3, Eth1/10/4
17   VLAN0017                         active    Eth1/1, Eth1/2,
Eth1/3, Eth1/4
                                               Eth1/5, Eth1/6,
Eth1/7, Eth1/8
                                               Eth1/9/1, Eth1/9/2,
Eth1/9/3
                                               Eth1/9/4, Eth1/10/1,
Eth1/10/2
                                               Eth1/10/3, Eth1/10/4
18   VLAN0018                         active    Eth1/1, Eth1/2,
Eth1/3, Eth1/4
                                               Eth1/5, Eth1/6,
Eth1/7, Eth1/8
                                               Eth1/9/1, Eth1/9/2,
Eth1/9/3
                                               Eth1/9/4, Eth1/10/1,
Eth1/10/2
                                               Eth1/10/3, Eth1/10/4
31   VLAN0031                         active    Eth1/11, Eth1/12,
Eth1/13
                                               Eth1/14, Eth1/15,
Eth1/16
                                               Eth1/17, Eth1/18,
Eth1/19
                                               Eth1/20, Eth1/21,
Eth1/22
32   VLAN0032                         active    Eth1/23, Eth1/24,
Eth1/25
```

```
                                                   Eth1/26, Eth1/27,
Eth1/28
                                                   Eth1/29, Eth1/30,
Eth1/31
                                                   Eth1/32, Eth1/33,
Eth1/34
33   VLAN0033                          active    Eth1/11, Eth1/12,
Eth1/13
                                                   Eth1/14, Eth1/15,
Eth1/16
                                                   Eth1/17, Eth1/18,
Eth1/19
                                                   Eth1/20, Eth1/21,
Eth1/22
34   VLAN0034                          active    Eth1/23, Eth1/24,
Eth1/25
                                                   Eth1/26, Eth1/27,
Eth1/28
                                                   Eth1/29, Eth1/30,
Eth1/31
                                                   Eth1/32, Eth1/33,
Eth1/34

cs1# show interface trunk

-----------------------------------------------------
Port          Native  Status        Port
              Vlan                  Channel
-----------------------------------------------------
Eth1/1        1       trunking      --
Eth1/2        1       trunking      --
Eth1/3        1       trunking      --
Eth1/4        1       trunking      --
Eth1/5        1       trunking      --
Eth1/6        1       trunking      --
Eth1/7        1       trunking      --
Eth1/8        1       trunking      --
Eth1/9/1      1       trunking      --
Eth1/9/2      1       trunking      --
Eth1/9/3      1       trunking      --
Eth1/9/4      1       trunking      --
Eth1/10/1     1       trunking      --
Eth1/10/2     1       trunking      --
Eth1/10/3     1       trunking      --
Eth1/10/4     1       trunking      --
Eth1/11       33      trunking      --
```

```
Eth1/12       33      trunking      --
Eth1/13       33      trunking      --
Eth1/14       33      trunking      --
Eth1/15       33      trunking      --
Eth1/16       33      trunking      --
Eth1/17       33      trunking      --
Eth1/18       33      trunking      --
Eth1/19       33      trunking      --
Eth1/20       33      trunking      --
Eth1/21       33      trunking      --
Eth1/22       33      trunking      --
Eth1/23       34      trunking      --
Eth1/24       34      trunking      --
Eth1/25       34      trunking      --
Eth1/26       34      trunking      --
Eth1/27       34      trunking      --
Eth1/28       34      trunking      --
Eth1/29       34      trunking      --
Eth1/30       34      trunking      --
Eth1/31       34      trunking      --
Eth1/32       34      trunking      --
Eth1/33       34      trunking      --
Eth1/34       34      trunking      --
Eth1/35       1       trnk-bndl     Po1
Eth1/36       1       trnk-bndl     Po1
Po1           1       trunking      --

-------------------------------------------------------
Port          Vlans Allowed on Trunk
-------------------------------------------------------
Eth1/1        1,17-18
Eth1/2        1,17-18
Eth1/3        1,17-18
Eth1/4        1,17-18
Eth1/5        1,17-18
Eth1/6        1,17-18
Eth1/7        1,17-18
Eth1/8        1,17-18
Eth1/9/1      1,17-18
Eth1/9/2      1,17-18
Eth1/9/3      1,17-18
Eth1/9/4      1,17-18
Eth1/10/1     1,17-18
Eth1/10/2     1,17-18
Eth1/10/3     1,17-18
Eth1/10/4     1,17-18
```

```
Eth1/11        31,33
Eth1/12        31,33
Eth1/13        31,33
Eth1/14        31,33
Eth1/15        31,33
Eth1/16        31,33
Eth1/17        31,33
Eth1/18        31,33
Eth1/19        31,33
Eth1/20        31,33
Eth1/21        31,33
Eth1/22        31,33
Eth1/23        32,34
Eth1/24        32,34
Eth1/25        32,34
Eth1/26        32,34
Eth1/27        32,34
Eth1/28        32,34
Eth1/29        32,34
Eth1/30        32,34
Eth1/31        32,34
Eth1/32        32,34
Eth1/33        32,34
Eth1/34        32,34
Eth1/35        1
Eth1/36        1
Po1            1
..
..
..
..
..
```

For specific port and VLAN usage details, refer to the banner and important notes section in your RCF.

4. Verify that the ISL between cs1 and cs2 is functional:

```
show port-channel summary
```

Show example

```
cs1# show port-channel summary
Flags:  D - Down        P - Up in port-channel (members)
        I - Individual  H - Hot-standby (LACP only)
        s - Suspended   r - Module-removed
        b - BFD Session Wait
        S - Switched    R - Routed
        U - Up (port-channel)
        p - Up in delay-lacp mode (member)
        M - Not in use. Min-links not met
--------------------------------------------------------------------
------------
Group Port-       Type     Protocol  Member Ports      Channel
--------------------------------------------------------------------
------------
1     Po1(SU)     Eth      LACP      Eth1/35(P)        Eth1/36(P)
cs1#
```

5. Verify that the cluster LIFs have reverted to their home port:

```
network interface show -role cluster
```

Show example

```
cluster1::*> network interface show -role cluster
            Logical            Status     Network            Current
Current Is
Vserver     Interface          Admin/Oper Address/Mask       Node
Port    Home
----------- ------------------ ---------- ------------------
------------------- ------- ----
Cluster
            cluster1-01_clus1  up/up      169.254.3.4/23
cluster1-01         e0d     true
            cluster1-01_clus2  up/up      169.254.3.5/23
cluster1-01         e0d     true
            cluster1-02_clus1  up/up      169.254.3.8/23
cluster1-02         e0d     true
            cluster1-02_clus2  up/up      169.254.3.9/23
cluster1-02         e0d     true
            cluster1-03_clus1  up/up      169.254.1.3/23
cluster1-03         e0b     true
            cluster1-03_clus2  up/up      169.254.1.1/23
cluster1-03         e0b     true
            cluster1-04_clus1  up/up      169.254.1.6/23
cluster1-04         e0b     true
            cluster1-04_clus2  up/up      169.254.1.7/23
cluster1-04         e0b     true
8 entries were displayed.
cluster1::*>
```

6. Verify that the cluster is healthy:

```
cluster show
```

Show example

```
cluster1::*> cluster show
Node                  Health  Eligibility   Epsilon
--------------------- ------- ------------- -------
cluster1-01           true    true          false
cluster1-02           true    true          false
cluster1-03           true    true          true
cluster1-04           true    true          false
4 entries were displayed.
cluster1::*>
```

7. Ping the remote cluster interfaces to verify connectivity:

```
cluster ping-cluster -node local
```

Show example

```
cluster1::*> cluster ping-cluster -node local
Host is cluster1-03
Getting addresses from network interface table...
Cluster cluster1-03_clus1 169.254.1.3 cluster1-03 e0a
Cluster cluster1-03_clus2 169.254.1.1 cluster1-03 e0b
Cluster cluster1-04_clus1 169.254.1.6 cluster1-04 e0a
Cluster cluster1-04_clus2 169.254.1.7 cluster1-04 e0b
Cluster cluster1-01_clus1 169.254.3.4 cluster1-01 e0a
Cluster cluster1-01_clus2 169.254.3.5 cluster1-01 e0d
Cluster cluster1-02_clus1 169.254.3.8 cluster1-02 e0a
Cluster cluster1-02_clus2 169.254.3.9 cluster1-02 e0d
Local = 169.254.1.3 169.254.1.1
Remote = 169.254.1.6 169.254.1.7 169.254.3.4 169.254.3.5 169.254.3.8
169.254.3.9
Cluster Vserver Id = 4294967293
Ping status:
............
Basic connectivity succeeds on 12 path(s)
Basic connectivity fails on 0 path(s)
................................................
Detected 9000 byte MTU on 12 path(s):
    Local 169.254.1.3 to Remote 169.254.1.6
    Local 169.254.1.3 to Remote 169.254.1.7
    Local 169.254.1.3 to Remote 169.254.3.4
    Local 169.254.1.3 to Remote 169.254.3.5
    Local 169.254.1.3 to Remote 169.254.3.8
    Local 169.254.1.3 to Remote 169.254.3.9
    Local 169.254.1.1 to Remote 169.254.1.6
    Local 169.254.1.1 to Remote 169.254.1.7
    Local 169.254.1.1 to Remote 169.254.3.4
    Local 169.254.1.1 to Remote 169.254.3.5
    Local 169.254.1.1 to Remote 169.254.3.8
    Local 169.254.1.1 to Remote 169.254.3.9
Larger than PMTU communication succeeds on 12 path(s)
RPC status:
6 paths up, 0 paths down (tcp check)
6 paths up, 0 paths down (udp check)
```

Ethernet Switch Health Monitoring log collection

You can use the log collection feature to collect switch-related log files in ONTAP.

+
The Ethernet switch health monitor (CSHM) is responsible for ensuring the operational health of Cluster and Storage network switches and collecting switch logs for debugging purposes. This procedure guides you through the process of setting up and starting the collection of detailed **Support** logs from the switch and starts an hourly collection of **Periodic** data that is collected by AutoSupport.

Before you begin

- Verify that you have set up your environment using the 9336C-FX2 cluster switch **CLI**.
- Switch health monitoring must be enabled for the switch. Verify this by ensuring the `Is Monitored:` field is set to **true** in the output of the `system switch ethernet show` command.

Steps

1. Create a password for the Ethernet switch health monitor log collection feature:

   `system switch ethernet log setup-password`

   Show example

   ```
   cluster1::*> system switch ethernet log setup-password
   Enter the switch name: <return>
   The switch name entered is not recognized.
   Choose from the following list:
   cs1
   cs2

   cluster1::*> system switch ethernet log setup-password

   Enter the switch name: cs1
   Would you like to specify a user other than admin for log
   collection? {y|n}: n

   Enter the password: <enter switch password>
   Enter the password again: <enter switch password>

   cluster1::*> system switch ethernet log setup-password

   Enter the switch name: cs2
   Would you like to specify a user other than admin for log
   collection? {y|n}: n

   Enter the password: <enter switch password>
   Enter the password again: <enter switch password>
   ```

2. To start log collection, run the following command, replacing DEVICE with the switch used in the previous command. This starts both types of log collection: the detailed **Support** logs and an hourly collection of **Periodic** data.

```
system switch ethernet log modify -device <switch-name> -log-request true
```

Show example

```
cluster1::*> system switch ethernet log modify -device cs1 -log
-request true

Do you want to modify the cluster switch log collection
configuration? {y|n}: [n] y

Enabling cluster switch log collection.

cluster1::*> system switch ethernet log modify -device cs2 -log
-request true

Do you want to modify the cluster switch log collection
configuration? {y|n}: [n] y

Enabling cluster switch log collection.
```

Wait for 10 minutes and then check that the log collection completes:

```
system switch ethernet log show
```

> If any of these commands return an error or if the log collection does not complete, contact NetApp support.

Troubleshooting

If you encounter any of the following error statuses reported by the log collection feature (visible in the output of `system switch ethernet log show`), try the corresponding debug steps:

Log collection error status	Resolution
RSA keys not present	Regenerate ONTAP SSH keys. Contact NetApp support.
switch password error	Verify credentials, test SSH connectivity, and regenerate ONTAP SSH keys. Review the switch documentation or contact NetApp support for instructions.
ECDSA keys not present for FIPS	If FIPS mode is enabled, ECDSA keys need to be generated on the switch before retrying.
pre-existing log found	Remove the previous log collection file on the switch.

switch dump log error	Ensure the switch user has log collection permissions. Refer to the prerequisites above.

Configure SNMPv3

Follow this procedure to configure SNMPv3, which supports Ethernet switch health monitoring (CSHM).

About this task

The following commands configure an SNMPv3 username on Cisco 9336C-FX2 switches:

- For **no authentication**:
  `snmp-server user SNMPv3_USER NoAuth`
- For **MD5/SHA authentication**:
  `snmp-server user SNMPv3_USER auth [md5|sha] AUTH-PASSWORD`
- For **MD5/SHA authentication with AES/DES encryption**:
  `snmp-server user SNMPv3_USER AuthEncrypt auth [md5|sha] AUTH-PASSWORD priv aes-128 PRIV-PASSWORD`

The following command configures an SNMPv3 username on the ONTAP side:
`cluster1::*> security login create -user-or-group-name SNMPv3_USER -application snmp -authentication-method usm -remote-switch-ipaddress ADDRESS`

The following command establishes the SNMPv3 username with CSHM:
`cluster1::*> system switch ethernet modify -device DEVICE -snmp-version SNMPv3 -community-or-username SNMPv3_USER`

Steps

1. Set up the SNMPv3 user on the switch to use authentication and encryption:

   ```
   show snmp user
   ```

Show example

```
(sw1)(Config)# snmp-server user SNMPv3User auth md5 <auth_password>
priv aes-128 <priv_password>

(sw1)(Config)# show snmp user

-----------------------------------------------------------------------
---------
                              SNMP USERS
-----------------------------------------------------------------------
---------

User              Auth            Priv(enforce)   Groups
acl_filter
----------------- --------------- --------------- ---------------
-----------
admin             md5             des(no)         network-admin
SNMPv3User        md5             aes-128(no)     network-operator

-----------------------------------------------------------------------
---------
     NOTIFICATION TARGET USERS (configured  for sending V3 Inform)
-----------------------------------------------------------------------
---------

User              Auth                Priv
----------------- ------------------- ------------

(sw1)(Config)#
```

2. Set up the SNMPv3 user on the ONTAP side:

```
security login create -user-or-group-name <username> -application snmp
-authentication-method usm -remote-switch-ipaddress 10.231.80.212
```

Show example

```
cluster1::*> system switch ethernet modify -device "sw1
(b8:59:9f:09:7c:22)" -is-monitoring-enabled-admin true

cluster1::*> security login create -user-or-group-name <username>
-application snmp -authentication-method usm -remote-switch
-ipaddress 10.231.80.212

Enter the authoritative entity's EngineID [remote EngineID]:

Which authentication protocol do you want to choose (none, md5, sha,
sha2-256)
[none]: md5

Enter the authentication protocol password (minimum 8 characters
long):

Enter the authentication protocol password again:

Which privacy protocol do you want to choose (none, des, aes128)
[none]: aes128

Enter privacy protocol password (minimum 8 characters long):
Enter privacy protocol password again:
```

3. Configure CSHM to monitor with the new SNMPv3 user:

```
system switch ethernet show-all -device "sw1" -instance
```

Show example

```
cluster1::*> system switch ethernet show-all -device "sw1" -instance

                                   Device Name: sw1
                                    IP Address: 10.231.80.212
                                  SNMP Version: SNMPv2c
                                 Is Discovered: true
   SNMPv2c Community String or SNMPv3 Username: cshm1!
                                  Model Number: N9K-C9336C-FX2
                                Switch Network: cluster-network
                             Software Version: Cisco Nexus
Operating System (NX-OS) Software, Version 9.3(7)
                      Reason For Not Monitoring: None  <---- displays
when SNMP settings are valid
                       Source Of Switch Version: CDP/ISDP
                                 Is Monitored ?: true
                   Serial Number of the Device: QTFCU3826001C
                                   RCF Version: v1.8X2 for
Cluster/HA/RDMA

cluster1::*>
cluster1::*> system switch ethernet modify -device "sw1" -snmp
-version SNMPv3 -community-or-username <username>
cluster1::*>
```

4. Verify that the serial number to be queried with the newly created SNMPv3 user is the same as detailed in the previous step after the CSHM polling period has completed.

   ```
   system switch ethernet polling-interval show
   ```

Show example

```
cluster1::*> system switch ethernet polling-interval show
         Polling Interval (in minutes): 5

cluster1::*> system switch ethernet show-all -device "sw1" -instance

                                  Device Name: sw1
                                   IP Address: 10.231.80.212
                                 SNMP Version: SNMPv3
                                Is Discovered: true
   SNMPv2c Community String or SNMPv3 Username: SNMPv3User
                                  Model Number: N9K-C9336C-FX2
                                Switch Network: cluster-network
                             Software Version: Cisco Nexus
Operating System (NX-OS) Software, Version 9.3(7)
                     Reason For Not Monitoring: None  <---- displays
when SNMP settings are valid
                      Source Of Switch Version: CDP/ISDP
                                Is Monitored ?: true
                   Serial Number of the Device: QTFCU3826001C
                                   RCF Version: v1.8X2 for
Cluster/HA/RDMA

cluster1::*>
```

Replace a Cisco Nexus 9336C-FX2 storage switch

You can replace a defective Nexus 9336C-FX2 switch in a cluster network. This is a nondisruptive procedure.

What you'll need

Before installing the NX-OS software and RCFs on a Cisco Nexus 9336C-FX2 storage switch, ensure that:

- Your system can support Cisco Nexus 9336C-FX2 storage switches.
- You have consulted the switch compatibility table on the Cisco Ethernet Switch page for the supported ONTAP, NX-OS, and RCF versions.
- You have referred to the appropriate software and upgrade guides available on the Cisco web site.

Cisco Nexus 3000 Series Switches:

- You have downloaded the applicable RCFs.
- The existing network configuration has the following characteristics:
  - The Cisco Ethernet Switches page has the latest RCF and NX-OS versions on your switches.

    - Management connectivity must exist on both switches.
- The replacement Cisco Nexus 9336C-FX2 switch has the following characteristics:
    - Management network connectivity is functional.
    - Console access to the replacement switch is in place.
    - The appropriate RCF and NX-OS operating system image is loaded onto the switch.
    - Initial confiugration of the switch is complete.

About this task

This procedure replaces the second Nexus 9336C-FX2 storage switch S2 with the new 9336C-FX switch NS2. The two nodes are node1 and node2.

Steps to complete:

- Confirm the switch to be replaced is S2.
- Disconnect the cables from switch S2.
- Reconnect the cables to switch NS2.
- Verify all device configurations on switch NS2.

> There can be dependencies between command syntax in the RCF and NX-OS versions.

Steps

1. If AutoSupport is enabled on this cluster, suppress automatic case creation by invoking an AutoSupport message:

   ```
   system node autosupport invoke -node * -type all - message MAINT=xh
   ```

   x is the duration of the maintenance window in hours.

2. Check on the health status of the storage node ports to make sure that there is connection to storage switch S1:

   ```
   storage port show -port-type ENET
   ```

Show example

```
storage::*> storage port show -port-type ENET
                                    Speed                       VLAN
Node           Port Type  Mode    (Gb/s) State    Status       ID
-------------- ---- ----- ------- ------ -------- --------- ----
node1
               e3a  ENET  storage 100    enabled  online       30
               e3b  ENET  storage   0    enabled  offline      30
               e7a  ENET  storage   0    enabled  offline      30
               e7b  ENET  storage   0    enabled  offline      30
node2
               e3a  ENET  storage 100    enabled  online       30
               e3b  ENET  storage   0    enabled  offline      30
               e7a  ENET  storage   0    enabled  offline      30
               e7b  ENET  storage   0    enabled  offline      30
storage::*>
```

3. Verify that storage switch S1 is available:

```
network device-discovery show
```

Show example

```
storage::*> network device-discovery show
Node/      Local Discovered
Protocol   Port  Device (LLDP: ChassisID)  Interface  Platform
--------   ----  -----------------------   ---------   ---------
node1/cdp
           e3a   S1                        Ethernet1/1 NX9336C
           e4a   node2                     e4a         AFF-A700
           e4e   node2                     e4e         AFF-A700
node1/lldp
           e3a   S1                        Ethernet1/1 -
           e4a   node2                     e4a         -
           e4e   node2                     e4e         -
node2/cdp
           e3a   S1                        Ethernet1/2 NX9336C
           e4a   node1                     e4a         AFF-A700
           e4e   node1                     e4e         AFF-A700
node2/lldp
           e3a   S1                        Ethernet1/2 -
           e4a   node1                     e4a         -
           e4e   node1                     e4e         -
storage::*>
```

4. Run the show `lldp neighbors` command on the working switch to confirm that you can see both nodes and all shelves:

   `show lldp neighbors`

   Show example

```
S1# show lldp neighbors
Capability codes:
   (R) Router, (B) Bridge, (T) Telephone, (C) DOCSIS Cable Device
   (W) WLAN Access Point, (P) Repeater, (S) Station, (O) Other
Device ID        Local Intf   Hold-time    Capability    Port ID
node1            Eth1/1       121          S             e3a
node2            Eth1/2       121          S             e3a
SHFGD2008000011  Eth1/5       121          S             e0a
SHFGD2008000011  Eth1/6       120          S             e0a
SHFGD2008000022  Eth1/7       120          S             e0a
SHFGD2008000022  Eth1/8       120          S             e0a
```

5. Verify the shelf ports in the storage system:

```
storage shelf port show -fields remote-device,remote-port
```

Show example

```
storage::*> storage shelf port show -fields remote-device,remote-
port
shelf   id  remote-port   remote-device
-----   --  -----------   -------------
3.20    0   Ethernet1/5   S1
3.20    1   -             -
3.20    2   Ethernet1/6   S1
3.20    3   -             -
3.30    0   Ethernet1/7   S1
3.20    1   -             -
3.30    2   Ethernet1/8   S1
3.20    3   -             -
storage::*>
```

6. Remove all cables attached to storage switch S2.
7. Reconnect all cables to the replacement switch NS2.
8. Recheck the health status of the storage node ports:

```
storage port show -port-type ENET
```

Show example

```
storage::*> storage port show -port-type ENET
                                     Speed                      VLAN
Node              Port Type  Mode    (Gb/s) State    Status      ID
---------------- ---- ----- ------- ------ -------- --------- ----
node1
                  e3a  ENET  storage 100    enabled  online      30
                  e3b  ENET  storage   0    enabled  offline     30
                  e7a  ENET  storage   0    enabled  offline     30
                  e7b  ENET  storage   0    enabled  offline     30
node2
                  e3a  ENET  storage 100    enabled  online      30
                  e3b  ENET  storage   0    enabled  offline     30
                  e7a  ENET  storage   0    enabled  offline     30
                  e7b  ENET  storage   0    enabled  offline     30
storage::*>
```

9. Verify that both switches are available:

```
network device-discovery show
```

Show example

```
storage::*> network device-discovery show
Node/     Local Discovered
Protocol  Port  Device (LLDP: ChassisID)  Interface   Platform
--------  ----  -----------------------   ---------   ---------
node1/cdp
          e3a  S1                         Ethernet1/1 NX9336C
          e4a  node2                      e4a         AFF-A700
          e4e  node2                      e4e         AFF-A700
          e7b   NS2                       Ethernet1/1 NX9336C
node1/lldp
          e3a  S1                         Ethernet1/1 -
          e4a  node2                      e4a         -
          e4e  node2                      e4e         -
          e7b  NS2                        Ethernet1/1 -
node2/cdp
          e3a  S1                         Ethernet1/2 NX9336C
          e4a  node1                      e4a         AFF-A700
          e4e  node1                      e4e         AFF-A700
          e7b  NS2                        Ethernet1/2 NX9336C
node2/lldp
          e3a  S1                         Ethernet1/2 -
          e4a  node1                      e4a         -
          e4e  node1                      e4e         -
          e7b  NS2                        Ethernet1/2 -
storage::*>
```

10. Verify the shelf ports in the storage system:

```
storage shelf port show -fields remote-device,remote-port
```

Show example

```
storage::*> storage shelf port show -fields remote-device,remote-
port
shelf   id    remote-port     remote-device
-----   --    -----------     -------------
3.20    0     Ethernet1/5     S1
3.20    1     Ethernet1/5     NS2
3.20    2     Ethernet1/6     S1
3.20    3     Ethernet1/6     NS2
3.30    0     Ethernet1/7     S1
3.20    1     Ethernet1/7     NS2
3.30    2     Ethernet1/8     S1
3.20    3     Ethernet1/8     NS2
storage::*>
```

11. If you suppressed automatic case creation, re-enable it by invoking an AutoSupport message:

    ```
    system node autosupport invoke -node * -type all -message MAINT=END
    ```

NVIDIA SN2100

Overview

Overview of configuration process for NVIDIA SN2100 storage switches

The NVIDIA SN2100 is a storage switch that allows you to route data between servers and storage arrays in a Storage Area Network (SAN).

Initial configuration overview

To configure a NVIDIA SN2100 switch on systems running ONTAP, follow these steps:

1. Install the hardware for the NVIDIA SN2100 switch.

   Instructions are available in the *NVIDIA Switch Installation Guide*.

2. Configure the switch.

   Instructions are available in the NVIDIA documentation.

3. Review cabling and configuration considerations.

   Review requirements for optical connections, the QSA adapter, and the switchport speed.

4. Cable NS224 shelves as switch-attached storage.

   Follow these procedures if you have a system in which the NS224 drive shelves need to be cabled as

switch-attached storage (not direct-attached storage).

5. Install Cumulus Linux in Cumulus mode or install Cumulus Linux in ONIE mode.

   You can install Cumulus Linux (CL) OS when the switch is running either Cumulus Linux or ONIE.

6. Install the Reference Configuration File script.

   There are two RCF scripts available for Clustering and Storage applications.

7. Configure SNMPv3 for switch log collection.

   This release includes support for SNMPv3 for switch log collection and for Switch Health Monitoring (SHM).

The procedures use Network Command Line Utility (NCLU), which is a command line interface that ensures Cumulus Linux is fully accessible to all. The net command is the wrapper utility you use to execute actions from a terminal.

Additional information

Before you begin installation or maintenance, be sure to review the following:

- Configuration requirements
- Components and part numbers
- Required documentation

Configuration requirements for NVIDIA SN2100 switches

For NVIDIA SN2100 switch installation and maintenance, be sure to review all requirements.

Installation requirements

If you want to build ONTAP clusters with more than two nodes, you need two supported cluster network switches. You can use additional management switches, which are optional.

You install the NVIDIA SN2100 switch (X190006/X190106) in the NVIDIA dual/single switch cabinet with the standard brackets that are included with the switch.

For cabling guidelines, see Cabling and configuration considerations.

ONTAP and Linux support

The NVIDIA SN2100 switch is a 10/25/40/100 Gb Ethernet switch running Cumulus Linux. The switch supports the following:

- ONTAP 9.10.1P3. The SN2100 switch serves Cluster and Storage applications in ONTAP 9.10.1P3 over different switch-pairs. From ONTAP 9.10.1P3, you can use NVIDIA SN2100 switches to combine storage and cluster functionality into a shared switch configuration.
- Cumulus Linux (CL) OS version 4.4.3. For current compatibility information, see the NVIDIA Ethernet Switches information page.
- You can install Cumulus Linux when the switch is running Cumulus Linux or ONIE.

Components and part numbers for NVIDIA SN2100 switches

For NVIDIA SN2100 switch installation and maintenance, be sure to review the list of components and part numbers for the cabinet and rail kit.

Cabinet details

You install the NVIDIA SN2100 switch (X190006/X190106) in the NVIDIA dual/single switch cabinet with the standard brackets that are included with the switch.

Rail kit details

The following table lists the part number and description for the MSN2100 switches and rail kits:

Part number	Description
X190006-PE	Cluster Switch, NVIDIA SN2100, 16PT 100G, PTSX
X190006-PI	Cluster Switch, NVIDIA SN2100, 16PT 100G, PSIN
X190106-FE-PE	Switch, NVIDIA SN2100, 16PT 100G, PTSX, Front End
X190106-FE-PI	Switch, NVIDIA SN2100, 16PT 100G, PSIN, Front End
X-MTEF-KIT-D	Rail Kit, NVIDIA Dual switch side by side
X-MTEF-KIT-E	Rail Kit, NVIDIA Single switch short depth

See NVIDIA documentation for details on installing your SN2100 switch and rail kit.

Documentation requirements for NVIDIA SN2100 switches

For NVIDIA SN2100 switch installation and maintenance, be sure to review all the recommended documentation.

The following table lists the documentation available for the NVIDIA SN2100 switches.

Title	Description
Setup and configure your NVIDIA SN2100 switches	Describes how to setup and configure your NVIDIA SN2100 switches, including installing Cumulus Linux and applicable RCFs.
Migrate from a Cisco cluster switch to a NVIDIA SN2100 cluster switch	Describes how to migrate from environments that use Cisco cluster switches to environments that use NVIDIA SN2100 cluster switches.
Migrate from a Cisco storage switch to a NVIDIA storage switch	Describes how to migrate from environments that use Cisco storage switches to environments that use NVIDIA SN2100 storage switches.

Title	Description
Migrate to a two-node switched cluster with NVIDIA SN2100 cluster switches	Describes how to migrate to a two-node switched environment using NVIDIA SN2100 cluster switches.
Replace a NVIDIA SN2100 cluster switch	Describes the procedure to replace a defective NVIDIA SN2100 switch in a cluster and download Cumulus Linux and reference configuration file.
Replace a NVIDIA SN2100 storage switch	Describes the procedure to replace a defective NVIDIA SN2100 storage switch and download Cumulus Linux and reference configuration file.

Install hardware

Install the hardware for the NVIDIA SN2100 switch

To install the SN2100 hardware, refer to NVIDIA's documentation.

Steps

1. Review the configuration requirements.
2. Follow the instructions in NVIDIA Switch Installation Guide.

What's next?

Configure the switch.

Configure the NVIDIA SN2100 switch

To configure the SN2100 switch, refer to NVIDIA's documentation.

Steps

1. Review the configuration requirements.
2. Follow the instructions in NVIDIA System Bring-Up..

What's next?

Review cabling and configuration considerations.

Review cabling and configuration considerations

Before configuring your NVIDIA SN2100 switch, review the following considerations.

NVIDIA port details

Switch ports	Ports usage
swp1s0-3	10/40 cluster port nodes
swp2s0-3	25/100 cluster port nodes

swp3-14 40/100 cluster port nodes	swp15-16 40/100 Inter-Switch Link (ISL) ports

See the Hardware Universe for more information on switch ports.

Optical connections

Only optical connections are supported on SN2100 switches with X1151A NIC, X1146A NIC, or onboard 100GbE ports.
For example:

- AFF A800 on ports e0a and e0b
- AFF A320 on ports e0g and e0h

QSA adpater

When a QSA adapter is used to connect to the onboard Intel cluster ports on a platform, not all links come up. Example platforms are: FAS2750, AFF A300, and FAS8200 (all 10G) and AFF A250 (25G).

To resolve this issue, do the following:

1. For Intel 10G, manually set the swp1s0-3 link speed to 10000 and set auto-negotiation to off.
2. For Chelsio 25G, manually set the swp2s0-3 link speed to 25000 and set auto-negotiation to off.

> Using 10G/25G QSA, use the non-breakout 40/100G ports. Do not insert the QSA adapter on ports that are configured for breakout.

Switchport speed

Depending on the transceiver in the switchport, you might need to set the speed on the switchport to fixed speed. If using 10G and 25G breakout ports, make sure that auto-negotiation is off and hard set the port speed on the switch.
For example:

```
cumulus@cumulus:mgmt:~$ net add int swp1s3 link autoneg off && net com
--- /etc/network/interfaces     2019-11-17 00:17:13.470687027 +0000
+++ /run/nclu/ifupdown2/interfaces.tmp  2019-11-24 00:09:19.435226258
+0000
@@ -37,21 +37,21 @@
     alias 10G Intra-Cluster Node
     link-autoneg off
     link-speed 10000  <---- port speed set
     mstpctl-bpduguard yes
     mstpctl-portadminedge yes
     mtu 9216

auto swp1s3
iface swp1s3
     alias 10G Intra-Cluster Node
-    link-autoneg off
+    link-autoneg on
     link-speed 10000 <---- port speed set
     mstpctl-bpduguard yes
     mstpctl-portadminedge yes
     mtu 9216

auto swp2s0
iface swp2s0
     alias 25G Intra-Cluster Node
     link-autoneg off
     link-speed 25000 <---- port speed set
```

What's next?

Cable NS224 shelves as switch-attached storage.

Cable NS224 shelves as switch-attached storage

If you have a system in which the NS224 drive shelves need to be cabled as switch-attached storage (not direct-attached storage), use the information provided here.

- Cable NS224 drive shelves through storage switches:

  Information for cabling switch-attached NS224 drive shelves

- Install your storage switches:

  AFF and FAS Switch Documentation

- Confirm supported hardware, such as storage switches and cables, for your platform model:

  NetApp Hardware Universe

Configure software

Software install workflow for NVIDIA SN2100 storage switches

To install and configure the software for a NVIDIA SN2100 switch, follow these steps:

1. Install Cumulus Linux in Cumulus mode or install Cumulus Linux in ONIE mode.

   You can install Cumulus Linux (CL) OS when the switch is running either Cumulus Linux or ONIE.

2. Install the Reference Configuration File script.

   There are two RCF scripts available for Clustering and Storage applications.

3. Configure SNMPv3 for switch log collection.

   This release includes support for SNMPv3 for switch log collection and for Switch Health Monitoring (SHM).

The procedures use Network Command Line Utility (NCLU), which is a command line interface that ensures Cumulus Linux is fully accessible to all. The net command is the wrapper utility you use to execute actions from a terminal.

Install Cumulus Linux in Cumulus mode

Follow this procedure to install Cumulus Linux (CL) OS when the switch is running in Cumulus mode.

> Cumulus Linux (CL) OS can be installed either when the switch is running Cumulus Linux or ONIE (see Install in ONIE mode).

What you'll need

- Intermediate-level Linux knowledge.
- Familiarity with basic text editing, UNIX file permissions, and process monitoring. A variety of text editors are pre-installed, including `vi` and `nano`.
- Access to a Linux or UNIX shell. If you are running Windows, use a Linux environment as your command line tool for interacting with Cumulus Linux.
- The baud rate requirement must be set to 115200 on the serial console switch for NVIDIA SN2100 switch console access, as follows:
  - 115200 baud
  - 8 data bits
  - 1 stop bit
  - parity: none
  - flow control: none

About this task

Be aware of the following:

> Each time Cumulus Linux is installed, the entire file system structure is erased and rebuilt.

The default password for the cumulus user account is **cumulus**. The first time you log into Cumulus Linux, you must change this default password. Be sure to update any automation scripts before installing a new image. Cumulus Linux provides command line options to change the default password automatically during the installation process.

Steps

1. Log in to the switch.

   First time log in to the switch requires username/password of **cumulus**/**cumulus** with `sudo` privileges.

   Show example

   ```
   cumulus login: cumulus
   Password: cumulus
   You are required to change your password immediately (administrator
   enforced)
   Changing password for cumulus.
   Current password: cumulus
   New password: <new_password>
   Retype new password: <new_password>
   ```

2. Check the Cumulus Linux version:

   ```
   net show system
   ```

Show example

```
cumulus@cumulus:mgmt:~$ net show system
Hostname......... cumulus
Build............ Cumulus Linux 4.4.3
Uptime........... 0:08:20.860000
Model............ Mlnx X86
CPU.............. x86_64 Intel Atom C2558 2.40GHz
Memory........... 8GB
Disk............. 14.7GB
ASIC............. Mellanox Spectrum MT52132
Ports............ 16 x 100G-QSFP28
Part Number...... MSN2100-CB2FC
Serial Number.... MT2105T05177
Platform Name.... x86_64-mlnx_x86-r0
Product Name..... MSN2100
ONIE Version..... 2019.11-5.2.0020-115200
Base MAC Address. 04:3F:72:43:92:80
Manufacturer..... Mellanox
```

3. Configure the hostname, IP address, subnet mask, and default gateway. The new hostname only becomes effective after restarting the console/SSH session.

> A Cumulus Linux switch provides at least one dedicated Ethernet management port called `eth0`. This interface is specifically for out-of-band management use. By default, the management interface uses DHCPv4 for addressing.

> Do not use an underscore (_), apostrophe ('), or non-ASCII characters in the hostname.

Show example

```
cumulus@cumulus:mgmt:~$ net add hostname sw1
cumulus@cumulus:mgmt:~$ net add interface eth0 ip address
10.233.204.71
cumulus@cumulus:mgmt:~$ net add interface eth0 ip gateway
10.233.204.1
cumulus@cumulus:mgmt:~$ net pending
cumulus@cumulus:mgmt:~$ net commit
```

This command modifies both the `/etc/hostname` and `/etc/hosts` files.

4. Confirm that the hostname, IP address, subnet mask, and default gateway have been updated.

Show example

```
cumulus@sw1:mgmt:~$ hostname sw1
cumulus@sw1:mgmt:~$ ifconfig eth0
eth0: flags=4163<UP,BROADCAST,RUNNING,MULTICAST>  mtu 1500
inet 10.233.204.71  netmask 255.255.254.0  broadcast 10.233.205.255
inet6 fe80::bace:f6ff:fe19:1df6  prefixlen 64  scopeid 0x20<link>
ether b8:ce:f6:19:1d:f6  txqueuelen 1000  (Ethernet)
RX packets 75364  bytes 23013528 (21.9 MiB)
RX errors 0  dropped 7  overruns 0  frame 0
TX packets 4053  bytes 827280 (807.8 KiB)
TX errors 0  dropped 0 overruns 0  carrier 0  collisions 0 device
memory 0xdfc00000-dfc1ffff

cumulus@sw1::mgmt:~$ ip route show vrf mgmt
default via 10.233.204.1 dev eth0
unreachable default metric 4278198272
10.233.204.0/23 dev eth0 proto kernel scope link src 10.233.204.71
127.0.0.0/8 dev mgmt proto kernel scope link src 127.0.0.1
```

5. Configure the time zone using NTP interactive mode.
   a. On a terminal, run the following command:

   ```
   cumulus@sw1:~$ sudo dpkg-reconfigure tzdata
   ```

   b. Follow the on-screen menu options to select the geographic area and region.
   c. To set the time zone for all services and daemons, reboot the switch.
   d. Verify that the date and time on the switch are correct and update if necessary.
6. Install Cumulus Linux 4.4.3:

   ```
   cumulus@sw1:mgmt:~$ sudo onie-install -a -i http://<web-server>/<path>/cumulus-linux-4.4.3-mlx-amd64.bin
   ```

   The installer starts the download. Type **y** when prompted.
7. Reboot the NVIDIA SN2100 switch:

   ```
   cumulus@sw1:mgmt:~$ sudo reboot
   ```

8. The installation starts automatically, and the following GRUB screens appear. Do **not** make any selections:
   - Cumulus-Linux GNU/Linux

- ONIE: Install OS
- CUMULUS-INSTALL
- Cumulus-Linux GNU/Linux

9. Repeat steps 1 to 4 to log in.
10. Verify that the Cumulus Linux version is 4.4.3:

    ```
    net show version
    ```

    Show example

    ```
    cumulus@sw1:mgmt:~$ net show version
    NCLU_VERSION=1.0-cl4.4.3u0
    DISTRIB_ID="Cumulus Linux"
    DISTRIB_RELEASE=4.4.3
    DISTRIB_DESCRIPTION="Cumulus Linux 4.4.3"
    ```

11. Create a new user and add this user to the `sudo` group. This user only becomes effective after the console/SSH session is restarted.

    ```
    sudo adduser --ingroup netedit admin
    ```

Show example

```
cumulus@sw1:mgmt:~$ sudo adduser --ingroup netedit admin
[sudo] password for cumulus:
Adding user `admin’ ...
Adding new user `admin’ (1001) with group `netedit' ...
Creating home directory `/home/admin’ ...
Copying files from `/etc/skel' ...
New password:
Retype new password:
passwd: password updated successfully
Changing the user information for admin
Enter the new value, or press ENTER for the default
Full Name []:
Room Number []:
Work Phone []:
Home Phone []:
Other []:
Is the information correct? [Y/n] y

cumulus@sw1:mgmt:~$ sudo adduser admin sudo
[sudo] password for cumulus:
Adding user `admin' to group `sudo' ...
Adding user admin to group sudo
Done.
cumulus@sw1:mgmt:~$ exit
logout
Connection to 10.233.204.71 closed.

[admin@cycrh6svl01 ~]$ ssh admin@10.233.204.71
admin@10.233.204.71's password:
Linux sw1 4.19.0-cl-1-amd64 #1 SMP Cumulus 4.19.206-1+cl4.4.3u1
(2021-09-09) x86_64
Welcome to NVIDIA Cumulus (R) Linux (R)

For support and online technical documentation, visit
http://www.cumulusnetworks.com/support

The registered trademark Linux (R) is used pursuant to a sublicense
from LMI, the exclusive licensee of Linus Torvalds, owner of the
mark on a world-wide basis.
admin@sw1:mgmt:~$
```

What’s next?

Install RCF script.

Install Cumulus Linux in ONIE mode

Follow this procedure to install Cumulus Linux (CL) OS when the switch is running in ONIE mode.

> Cumulus Linux (CL) OS can be installed either when the switch is running Cumulus Linux or ONIE (see Install in Cumulus mode).

About this task

You can install the Cumulus Linux using Open Network Install Environment (ONIE) that allows for automatic discovery of a network installer image. This facilitates the system model of securing switches with an operating system choice, such as Cumulus Linux. The easiest way to install Cumulus Linux with ONIE is with local HTTP discovery.

> If your host is IPv6-enabled, make sure it is running a web server. If your host is IPv4-enabled, make sure it is running DHCP in addition to a web server.

This procedure demonstrates how to upgrade Cumulus Linux after the admin has booted in ONIE.

Steps

1. Download the Cumulus Linux installation file to the root directory of the web server. Rename this file `onie-installer`.
2. Connect your host to the management Ethernet port of the switch using an Ethernet cable.
3. Power on the switch. The switch downloads the ONIE image installer and boots. After the installation completes, the Cumulus Linux login prompt appears in the terminal window.

   > Each time Cumulus Linux is installed, the entire file system structure is erased and rebuilt.

4. Reboot the SN2100 switch:

   ```
   cumulus@cumulus:mgmt:~$ sudo reboot
   ```

5. Press the **Esc** key at the GNU GRUB screen to interrupt the normal boot process, select **ONIE** and press **Enter**.
6. On the next screen displayed, select **ONIE: Install OS**.
7. The ONIE installer discovery process runs searching for the automatic installation. Press **Enter** to temporarily stop the process.
8. When the discovery process has stopped:

   ```
   ONIE:/ # onie-stop
   discover: installer mode detected.
   Stopping: discover...start-stop-daemon: warning: killing process 427:
   No such process done.
   ```

9. If the DHCP service is running on your network, verify that the IP address, subnet mask, and the default gateway are correctly assigned:

   ```
   ifconfig eth0
   ```

   Show example

   ```
   ONIE:/ # ifconfig eth0
   eth0   Link encap:Ethernet  HWaddr B8:CE:F6:19:1D:F6
          inet addr:10.233.204.71  Bcast:10.233.205.255
   Mask:255.255.254.0
          inet6 addr: fe80::bace:f6ff:fe19:1df6/64 Scope:Link
          UP BROADCAST RUNNING MULTICAST  MTU:1500  Metric:1
          RX packets:21344 errors:0 dropped:2135 overruns:0 frame:0
          TX packets:3500 errors:0 dropped:0 overruns:0 carrier:0
          collisions:0 txqueuelen:1000
          RX bytes:6119398 (5.8 MiB)  TX bytes:472975 (461.8 KiB)
          Memory:dfc00000-dfc1ffff

   ONIE:/ # route
   Kernel IP routing table
   Destination     Gateway         Genmask         Flags Metric Ref
   Use Iface

   default         10.233.204.1    0.0.0.0         UG    0      0
   0   eth0
   10.233.204.0    *               255.255.254.0   U     0      0
   0   eth0
   ```

10. If the IP addressing scheme is manually defined, do the following:

    ```
    ONIE:/ # ifconfig eth0 10.233.204.71 netmask 255.255.254.0
    ONIE:/ # route add default gw 10.233.204.1
    ```

11. Repeat step 9 to verify that the static information is correctly entered.
12. Install Cumulus Linux:

```
ONIE:/ # route

  Kernel IP routing table

  ONIE:/ # onie-nos-install http://<web-server>/<path>/cumulus-linux-
4.4.3-mlx-amd64.bin

  Stopping: discover... done.
  Info: Attempting
http://10.60.132.97/x/eng/testbedN,svl/nic/files/cumulus-linux-4.4.3-
mlx-amd64.bin ...
  Connecting to 10.60.132.97 (10.60.132.97:80)
  installer            100% |*|   552M  0:00:00 ETA
  ...
  ...
```

13. Once the installation has completed, log in to the switch:

Show example

```
cumulus login: cumulus
Password: cumulus
You are required to change your password immediately (administrator
enforced)
Changing password for cumulus.
Current password: cumulus
New password: <new_password>
Retype new password: <new_password>
```

14. Verify the Cumulus Linux version:

```
net show version
```

Show example

```
cumulus@cumulus:mgmt:~$ net show version
NCLU_VERSION=1.0-cl4.4.3u4
DISTRIB_ID="Cumulus Linux"
DISTRIB_RELEASE=4.4.3
DISTRIB_DESCRIPTION="Cumulus Linux 4.4.3”
```

What’s next?

Install RCF script.

Install the RCF script

Follow this procedure to install the RCF script.

What you'll need

Before installing the RCF script, make sure that the following are available on the switch:

- Cumulus Linux 4.4.3 is installed.
- IP address, subnet mask, and default gateway defined via DHCP or manually configured.

Current RCF script versions

There are two RCF scripts available for Clustering and Storage applications. The procedure for each is the same.

- Clustering: **MSN2100-RCF-v1.8-Cluster**
- Storage: **MSN2100-RCF-v1.8-Storage**

> The following example procedure shows how to download and apply the RCF script for Cluster switches.

> Example command output uses switch management IP address 10.233.204.71, netmask 255.255.254.0 and default gateway 10.233.204.1.

Steps

1. Display the available interfaces on the SN2100 switch:

```
net show interface all
```

Show example

```
cumulus@cumulus:mgmt:~$ net show interface all

State  Name   Spd  MTU    Mode         LLDP                Summary
-----  -----  ---  -----  -----------  ------------------
--------------
...
...
ADMDN  swp1   N/A  9216   NotConfigured
ADMDN  swp2   N/A  9216   NotConfigured
ADMDN  swp3   N/A  9216   NotConfigured
ADMDN  swp4   N/A  9216   NotConfigured
ADMDN  swp5   N/A  9216   NotConfigured
ADMDN  swp6   N/A  9216   NotConfigured
ADMDN  swp7   N/A  9216   NotConfigure
ADMDN  swp8   N/A  9216   NotConfigured
ADMDN  swp9   N/A  9216   NotConfigured
ADMDN  swp10  N/A  9216   NotConfigured
ADMDN  swp11  N/A  9216   NotConfigured
ADMDN  swp12  N/A  9216   NotConfigured
ADMDN  swp13  N/A  9216   NotConfigured
ADMDN  swp14  N/A  9216   NotConfigured
ADMDN  swp15  N/A  9216   NotConfigured
ADMDN  swp16  N/A  9216   NotConfigured
```

2. Copy the RCF python script to the switch:

```
cumulus@cumulus:mgmt:~$ pwd
/home/cumulus
cumulus@cumulus:mgmt: /tmp$ scp <user>@<host:/<path>/MSN2100-RCF-v1.8-
Cluster
ssologin@10.233.204.71's password:
MSN2100-RCF-v1.8-Cluster                 100% 8607   111.2KB/s
00:00
```

3. Apply the RCF python script **MSN2100-RCF-v1.8-Cluster**:

```
cumulus@cumulus:mgmt:/tmp$ sudo python3 MSN2100-RCF-v1.8-Cluster
[sudo] password for cumulus:
...
Step 1: Creating the banner file
Step 2: Registering banner message
Step 3: Updating the MOTD file
Step 4: Ensuring passwordless use of cl-support command by admin
Step 5: Disabling apt-get
Step 6: Creating the interfaces
Step 7: Adding the interface config
Step 8: Disabling cdp
Step 9: Adding the lldp config
Step 10: Adding the RoCE base config
Step 11: Modifying RoCE Config
Step 12: Configure SNMP
Step 13: Reboot the switch
```

The RCF script completes the steps listed above.

> For any RCF python script issues that cannot be corrected, contact NetApp Support for assistance.

4. Verify the configuration after the reboot:

```
net show interface all
```

Show example

```
cumulus@cumulus:mgmt:~$ net show interface all

State  Name       Spd   MTU    Mode       LLDP               Summary
-----  --------- ----  -----  ---------- ----------------- --------
...
...
DN     swp1s0     N/A   9216   Trunk/L2                     Master:
bridge(UP)
DN     swp1s1     N/A   9216   Trunk/L2                     Master:
bridge(UP)
DN     swp1s2     N/A   9216   Trunk/L2                     Master:
bridge(UP)
DN     swp1s3     N/A   9216   Trunk/L2                     Master:
bridge(UP)
DN     swp2s0     N/A   9216   Trunk/L2                     Master:
bridge(UP)
DN     swp2s1     N/A   9216   Trunk/L2                     Master:
bridge(UP)
DN     swp2s2     N/A   9216   Trunk/L2                     Master:
bridge(UP)
DN     swp2s3     N/A   9216   Trunk/L2                     Master:
bridge(UP)
UP     swp3       100G  9216   Trunk/L2                     Master:
bridge(UP)
UP     swp4       100G  9216   Trunk/L2                     Master:
bridge(UP)
DN     swp5       N/A   9216   Trunk/L2                     Master:
bridge(UP)
DN     swp6       N/A   9216   Trunk/L2                     Master:
bridge(UP)
DN     swp7       N/A   9216   Trunk/L2                     Master:
bridge(UP)
DN     swp8       N/A   9216   Trunk/L2                     Master:
bridge(UP)
DN     swp9       N/A   9216   Trunk/L2                     Master:
bridge(UP)
DN     swp10      N/A   9216   Trunk/L2                     Master:
bridge(UP)
DN     swp11      N/A   9216   Trunk/L2                     Master:
bridge(UP)
DN     swp12      N/A   9216   Trunk/L2                     Master:
bridge(UP)
DN     swp13      N/A   9216   Trunk/L2                     Master:
bridge(UP)
```

```
DN     swp14     N/A   9216   Trunk/L2                    Master:
bridge(UP)
UP     swp15     N/A   9216   BondMember                  Master:
bond_15_16(UP)
UP     swp16     N/A   9216   BondMember                  Master:
bond_15_16(UP)
...
...

cumulus@cumulus:mgmt:~$ net show roce config
RoCE mode.......... lossless
Congestion Control:
  Enabled SPs.... 0 2 5
  Mode........... ECN
  Min Threshold.. 150 KB
  Max Threshold.. 1500 KB
PFC:
  Status......... enabled
  Enabled SPs.... 2 5
  Interfaces......... swp10-16,swp1s0-3,swp2s0-3,swp3-9

DSCP                      802.1p  switch-priority
------------------------  ------  ---------------
0 1 2 3 4 5 6 7                0                0
8 9 10 11 12 13 14 15          1                1
16 17 18 19 20 21 22 23        2                2
24 25 26 27 28 29 30 31        3                3
32 33 34 35 36 37 38 39        4                4
40 41 42 43 44 45 46 47        5                5
48 49 50 51 52 53 54 55        6                6
56 57 58 59 60 61 62 63        7                7

switch-priority  TC  ETS
---------------  --  --------
0 1 3 4 6 7       0  DWRR 28%
2                 2  DWRR 28%
5                 5  DWRR 43%
```

5. Verify information for the transceiver in the interface:

```
net show interface pluggables
```

Show example

```
cumulus@cumulus:mgmt:~$ net show interface pluggables
Interface  Identifier     Vendor Name  Vendor PN        Vendor SN
    Vendor Rev
---------  -------------  -----------  ---------------
--------------  ----------
swp3       0x11 (QSFP28)  Amphenol     112-00574
APF20379253516  B0
swp4       0x11 (QSFP28)  AVAGO        332-00440        AF1815GU05Z
    A0
swp15      0x11 (QSFP28)  Amphenol     112-00573
APF21109348001  B0
swp16      0x11 (QSFP28)  Amphenol     112-00573
APF21109347895  B0
```

6. Verify that the nodes each have a connection to each switch:

```
net show lldp
```

Show example

```
cumulus@cumulus:mgmt:~$ net show lldp

LocalPort  Speed  Mode        RemoteHost              RemotePort
---------  -----  ----------  ----------------------  -----------
swp3       100G   Trunk/L2    sw1                     e3a
swp4       100G   Trunk/L2    sw2                     e3b
swp15      100G   BondMember  sw13                    swp15
swp16      100G   BondMember  sw14                    swp16
```

7. Verify the health of cluster ports on the cluster.
   a. Verify that e0d ports are up and healthy across all nodes in the cluster:

   ```
   network port show -role cluster
   ```

Show example

```
cluster1::*> network port show -role cluster

Node: node1

Ignore
                                                      Speed(Mbps)
Health   Health
Port      IPspace      Broadcast Domain Link MTU  Admin/Oper
Status   Status
--------- ------------ ---------------- ---- ---- -----------
-------- ------
e3a       Cluster      Cluster          up   9000  auto/10000
healthy  false
e3b       Cluster      Cluster          up   9000  auto/10000
healthy  false

Node: node2

Ignore
                                                      Speed(Mbps)
Health   Health
Port      IPspace      Broadcast Domain Link MTU  Admin/Oper
Status   Status
--------- ------------ ---------------- ---- ---- -----------
-------- ------
e3a       Cluster      Cluster          up   9000  auto/10000
healthy  false
e3b       Cluster      Cluster          up   9000  auto/10000
healthy  false
```

b. Verify the switch health from the cluster (this might not show switch sw2, since LIFs are not homed on e0d).

Show example

```
cluster1::*> network device-discovery show -protocol lldp
Node/       Local  Discovered
Protocol    Port   Device (LLDP: ChassisID)  Interface Platform
----------- ------ ------------------------- --------- ----------
node1/lldp
            e3a    sw1 (b8:ce:f6:19:1a:7e)   swp3      -
            e3b    sw2 (b8:ce:f6:19:1b:96)   swp3      -

node2/lldp
            e3a    sw1 (b8:ce:f6:19:1a:7e)   swp4      -
            e3b    sw2 (b8:ce:f6:19:1b:96)   swp4      -


cluster1::*> system switch ethernet show -is-monitoring-enabled
-operational true
Switch                      Type               Address
Model
--------------------------- ------------------ ----------------
-----
sw1                         cluster-network    10.233.205.90
MSN2100-CB2RC
     Serial Number: MNXXXXXXGD
      Is Monitored: true
            Reason: None
  Software Version: Cumulus Linux version 4.4.3 running on
Mellanox
                    Technologies Ltd. MSN2100
    Version Source: LLDP

sw2                         cluster-network    10.233.205.91
MSN2100-CB2RC
     Serial Number: MNCXXXXXXGS
      Is Monitored: true
            Reason: None
  Software Version: Cumulus Linux version 4.4.3 running on
Mellanox
                    Technologies Ltd. MSN2100
    Version Source: LLDP
```

What's next?

Configure switch log collection.

Ethernet Switch Health Monitoring log collection

The Ethernet switch health monitor (CSHM) is responsible for ensuring the operational health of Cluster and Storage network switches and collecting switch logs for debugging purposes. This procedure guides you through the process of setting up and starting the collection of detailed **Support** logs from the switch and starts an hourly collection of **Periodic** data that is collected by AutoSupport.

Before you begin

- The user for log collection must be specified when the Reference Configuration File (RCF) is applied. By default, this user is set to 'admin'. If you wish to use a different user, you must specify this in the *# SHM User*s section of the RCF.
- The user must have access to the **nv show** commands. This can be added by running `sudo adduser USER nv show` and replacing USER with the user for log collection.
- Switch health monitoring must be enabled for the switch. Verify this by ensuring the `Is Monitored:` field is set to **true** in the output of the `system switch ethernet show` command.

Steps

1. To set up log collection, run the following command for each switch. You are prompted to enter the switch name, username, and password for log collection.

   ```
   system switch ethernet log setup-password
   ```

Show example

```
cluster1::*> system switch ethernet log setup-password
Enter the switch name: <return>
The switch name entered is not recognized.
Choose from the following list:
cs1
cs2

cluster1::*> system switch ethernet log setup-password

Enter the switch name: cs1
Would you like to specify a user other than admin for log
collection? {y|n}: n

Enter the password: <enter switch password>
Enter the password again: <enter switch password>

cluster1::*> system switch ethernet log setup-password

Enter the switch name: cs2
Would you like to specify a user other than admin for log
collection? {y|n}: n

Enter the password: <enter switch password>
Enter the password again: <enter switch password>
```

2. To start log collection, run the following command, replacing DEVICE with the switch used in the previous command. This starts both types of log collection: the detailed `Support` logs and an hourly collection of `Periodic` data.

   ```
   system switch ethernet log modify -device <switch-name> -log-request true
   ```

Show example

```
cluster1::*> system switch ethernet log modify -device cs1 -log
-request true

Do you want to modify the cluster switch log collection
configuration? {y|n}: [n] y

Enabling cluster switch log collection.

cluster1::*> system switch ethernet log modify -device cs2 -log
-request true

Do you want to modify the cluster switch log collection
configuration? {y|n}: [n] y

Enabling cluster switch log collection.
```

Wait for 10 minutes and then check that the log collection completes:

```
system switch ethernet log show
```

> If any of these commands return an error or if the log collection does not complete, contact NetApp support.

Troubleshooting

If you encounter any of the following error statuses reported by the log collection feature (visible in the output of `system switch ethernet log show`), try the corresponding debug steps:

Log collection error status	Resolution
RSA keys not present	Regenerate ONTAP SSH keys. Contact NetApp support.
switch password error	Verify credentials, test SSH connectivity, and regenerate ONTAP SSH keys. Review switch documentation or contact NetApp support for instructions.
ECDSA keys not present for FIPS	If FIPS mode is enabled, ECDSA keys need to be generated on the switch before retrying.
pre-existing log found	Remove the previous log collection directory and '.tar' file located at `/tmp/shm_log` on the switch.

switch dump log error	Ensure the switch user has log collection permissions. Refer to the prerequisites above.

Configure SNMPv3

Follow this procedure to configure SNMPv3, which supports Ethernet switch health monitoring (CSHM).

About this task

The following commands configure an SNMPv3 username on NVIDIA SN2100 switches:

- For **no authentication**:
  `net add snmp-server username SNMPv3_USER auth-none`
- For **MD5/SHA authentication**:
  `net add snmp-server username SNMPv3_USER [auth-md5|auth-sha] AUTH-PASSWORD`
- For **MD5/SHA authentication with AES/DES encryption**:
  `net add snmp-server username SNMPv3_USER [auth-md5|auth-sha] AUTH-PASSWORD [encrypt-aes|encrypt-des] PRIV-PASSWORD`

The following command configures an SNMPv3 username on the ONTAP side:
`cluster1::*> security login create -user-or-group-name SNMPv3_USER -application snmp -authentication-method usm -remote-switch-ipaddress ADDRESS`

The following command establishes the SNMPv3 username with CSHM:
`cluster1::*> system switch ethernet modify -device DEVICE -snmp-version SNMPv3 -community-or-username SNMPv3_USER`

Steps

1. Set up the SNMPv3 user on the switch to use authentication and encryption:

   ```
   net show snmp status
   ```

Show example

```
cumulus@sw1:~$ net show snmp status
Simple Network Management Protocol (SNMP) Daemon.
---------------------------------  ----------------
Current Status                     active (running)
Reload Status                      enabled
Listening IP Addresses             all vrf mgmt
Main snmpd PID                     4318
Version 1 and 2c Community String  Configured
Version 3 Usernames                Not Configured
---------------------------------  ----------------
cumulus@sw1:~$
cumulus@sw1:~$ net add snmp-server username SNMPv3User auth-md5
<password> encrypt-aes <password>
cumulus@sw1:~$ net commit
--- /etc/snmp/snmpd.conf        2020-08-02 21:09:34.686949282 +0000
+++ /run/nclu/snmp/snmpd.conf   2020-08-11 00:13:51.826126655 +0000
@@ -1,26 +1,28 @@
 # Auto-generated config file: do not edit. #
 agentaddress udp:@mgmt:161
 agentxperms 777 777 snmp snmp
 agentxsocket /var/agentx/master
 createuser _snmptrapusernameX
+createuser SNMPv3User MD5 <password> AES <password>
 ifmib_max_num_ifaces 500
 iquerysecname _snmptrapusernameX
 master agentx
 monitor -r 60 -o laNames -o laErrMessage "laTable" laErrorFlag != 0
 pass -p 10 1.3.6.1.2.1.1.1 /usr/share/snmp/sysDescr_pass.py
 pass_persist 1.2.840.10006.300.43
/usr/share/snmp/ieee8023_lag_pp.py
 pass_persist 1.3.6.1.2.1.17 /usr/share/snmp/bridge_pp.py
 pass_persist 1.3.6.1.2.1.31.1.1.1.18
/usr/share/snmp/snmpifAlias_pp.py
 pass_persist 1.3.6.1.2.1.47 /usr/share/snmp/entity_pp.py
 pass_persist 1.3.6.1.2.1.99 /usr/share/snmp/entity_sensor_pp.py
 pass_persist 1.3.6.1.4.1.40310.1 /usr/share/snmp/resq_pp.py
 pass_persist 1.3.6.1.4.1.40310.2
/usr/share/snmp/cl_drop_cntrs_pp.py
 pass_persist 1.3.6.1.4.1.40310.3 /usr/share/snmp/cl_poe_pp.py
 pass_persist 1.3.6.1.4.1.40310.4 /usr/share/snmp/bgpun_pp.py
 pass_persist 1.3.6.1.4.1.40310.5 /usr/share/snmp/cumulus-status.py
 pass_persist 1.3.6.1.4.1.40310.6 /usr/share/snmp/cumulus-sensor.py
 pass_persist 1.3.6.1.4.1.40310.7 /usr/share/snmp/vrf_bgpun_pp.py
+rocommunity cshm1! default
```

```
 rouser _snmptrapusernameX
+rouser SNMPv3User priv
 sysobjectid 1.3.6.1.4.1.40310
 sysservices 72
-rocommunity cshm1! default


net add/del commands since the last "net commit"
================================================

User        Timestamp                   Command
----------  --------------------------
-----------------------------------------------------------------------
-----
SNMPv3User  2020-08-11 00:13:51.826987  net add snmp-server username
SNMPv3User auth-md5 <password> encrypt-aes <password>

cumulus@sw1:~$
cumulus@sw1:~$ net show snmp status
Simple Network Management Protocol (SNMP) Daemon.
---------------------------------  ----------------
Current Status                     active (running)
Reload Status                      enabled
Listening IP Addresses             all vrf mgmt
Main snmpd PID                     24253
Version 1 and 2c Community String  Configured
Version 3 Usernames                Configured     <---- Configured
here
---------------------------------  ----------------
cumulus@sw1:~$
```

2. Set up the SNMPv3 user on the ONTAP side:

```
security login create -user-or-group-name SNMPv3User -application snmp
-authentication-method usm -remote-switch-ipaddress 10.231.80.212
```

Show example

```
cluster1::*> security login create -user-or-group-name SNMPv3User
-application snmp -authentication-method usm -remote-switch
-ipaddress 10.231.80.212

Enter the authoritative entity's EngineID [remote EngineID]:

Which authentication protocol do you want to choose (none, md5, sha,
sha2-256)
[none]: md5

Enter the authentication protocol password (minimum 8 characters
long):

Enter the authentication protocol password again:

Which privacy protocol do you want to choose (none, des, aes128)
[none]: aes128

Enter privacy protocol password (minimum 8 characters long):
Enter privacy protocol password again:
```

3. Configure CSHM to monitor with the new SNMPv3 user:

```
system switch ethernet show-all -device "sw1 (b8:59:9f:09:7c:22)" -instance
```

Show example

```
cluster1::*> system switch ethernet show-all -device "sw1
(b8:59:9f:09:7c:22)" -instance
                                   Device Name: sw1
(b8:59:9f:09:7c:22)
                                    IP Address: 10.231.80.212
                                  SNMP Version: SNMPv2c
                                 Is Discovered: true
DEPRECATED-Community String or SNMPv3 Username: -
           Community String or SNMPv3 Username: cshm1!
                                  Model Number: MSN2100-CB2FC
                                Switch Network: cluster-network
                              Software Version: Cumulus Linux
version 4.4.3 running on Mellanox Technologies Ltd. MSN2100
                      Reason For Not Monitoring: None
                       Source Of Switch Version: LLDP
                                 Is Monitored ?: true
                   Serial Number of the Device: MT2110X06399  <----
serial number to check
                                   RCF Version: MSN2100-RCF-v1.9X6-
Cluster-LLDP Aug-18-2022

cluster1::*>
cluster1::*> system switch ethernet modify -device "sw1
(b8:59:9f:09:7c:22)" -snmp-version SNMPv3 -community-or-username
SNMPv3User
```

4. Verify that the serial number to be queried with the newly created SNMPv3 user is the same as detailed in the previous step once the CSHM polling period has completed.

   ```
   system switch ethernet polling-interval show
   ```

Show example

```
cluster1::*> system switch ethernet polling-interval show
         Polling Interval (in minutes): 5

cluster1::*> system switch ethernet show-all -device "sw1
(b8:59:9f:09:7c:22)" -instance
                                     Device Name: sw1
(b8:59:9f:09:7c:22)
                                      IP Address: 10.231.80.212
                                    SNMP Version: SNMPv3
                                   Is Discovered: true
DEPRECATED-Community String or SNMPv3 Username: -
           Community String or SNMPv3 Username: SNMPv3User
                                     Model Number: MSN2100-CB2FC
                                   Switch Network: cluster-network
                                Software Version: Cumulus Linux
version 4.4.3 running on Mellanox Technologies Ltd. MSN2100
                      Reason For Not Monitoring: None
                       Source Of Switch Version: LLDP
                                 Is Monitored ?: true
                   Serial Number of the Device: MT2110X06399  <----
serial number to check
                                     RCF Version: MSN2100-RCF-v1.9X6-
Cluster-LLDP Aug-18-2022
```

Migrate switches

Migrate from a Cisco storage switch to a NVIDIA SN2100 storage switch

You can migrate older Cisco switches for an ONTAP cluster to NVIDIA SN2100 storage switches. This is a non-disruptive procedure.

Review requirements

The following storage switches are supported:

- Cisco Nexus 9336C-FX2
- Cisco Nexus 3232C
- See the Hardware Universe for full details of supported ports and their configurations.

What you'll need

Ensure that:

- The existing cluster is properly set up and functioning.

- All storage ports are in the up state to ensure nondisruptive operations.
- The NVIDIA SN2100 storage switches are configured and operating under the proper version of Cumulus Linux installed with the reference configuration file (RCF) applied.
- The existing storage network configuration has the following:
  - A redundant and fully functional NetApp cluster using both older Cisco switches.
  - Management connectivity and console access to both the older Cisco switches and the new switches.
  - All cluster LIFs in the up state with the cluster LIfs are on their home ports.
  - ISL ports enabled and cabled between the older Cisco switches and between the new switches.
- See the Hardware Universe for full details of supported ports and their configurations.
- Some of the ports are configured on NVIDIA SN2100 switches to run at 100 GbE.
- You have planned, migrated, and documented 100 GbE connectivity from nodes to NVIDIA SN2100 storage switches.

Migrate the switches

About the examples

In this procedure, Cisco Nexus 9336C-FX2 storage switches are used for example commands and outputs.

The examples in this procedure use the following switch and node nomenclature:

- The existing Cisco Nexus 9336C-FX2 storage switches are *S1* and *S2*.
- The new NVIDIA SN2100 storage switches are *sw1* and *sw2*.
- The nodes are *node1* and *node2*.
- The cluster LIFs are *node1_clus1* and *node1_clus2* on node 1, and *node2_clus1* and *node2_clus2* on node 2 respectively.
- The `cluster1::*>` prompt indicates the name of the cluster.
- The network ports used in this procedure are *e5a* and *e5b*.
- Breakout ports take the format: swp1s0-3. For example four breakout ports on swp1 are *swp1s0*, *swp1s1*, *swp1s2*, and *swp1s3*.
- Switch S2 is replaced by switch sw2 first and then switch S1 is replaced by switch sw1.
  - Cabling between the nodes and S2 are then disconnected from S2 and reconnected to sw2.
  - Cabling between the nodes and S1 are then disconnected from S1 and reconnected to sw1.

Step 1: Prepare for migration

1. If AutoSupport is enabled, suppress automatic case creation by invoking an AutoSupport message:

   ```
   system node autosupport invoke -node * -type all -message MAINT=xh
   ```

   where *x* is the duration of the maintenance window in hours.

2. Change the privilege level to advanced, entering **y** when prompted to continue:

   ```
   set -privilege advanced
   ```

   The advanced prompt (*>) appears.

3. Determine the administrative or operational status for each storage interface:

   Each port should display enabled for `Status`.

Step 2: Configure cables and ports

1. Display the network port attributes:

   `storage port show`

   Show example

```
cluster1::*> storage port show
                                   Speed                       VLAN
Node           Port Type  Mode    (Gb/s) State    Status       ID
-------------- ---- ----- ------- ------ -------- --------- ----
node1
               e0c  ENET  storage  100   enabled  online      30
               e0d  ENET  storage    0   enabled  offline     30
               e5a  ENET  storage    0   enabled  offline     30
               e5b  ENET  storage  100   enabled  online      30
node2
               e0c  ENET  storage  100   enabled  online      30
               e0d  ENET  storage    0   enabled  offline     30
               e5a  ENET  storage    0   enabled  offline     30
               e5b  ENET  storage  100   enabled  online      30
cluster1::*>
```

2. Verify that the storage ports on each node are connected to existing storage switches in the following way (from the nodes' perspective) using the command:

   `network device-discovery show -protocol lldp`

Show example

```
cluster1::*> network device-discovery show -protocol lldp
Node/       Local  Discovered
Protocol    Port   Device (LLDP: ChassisID)  Interface
Platform
----------- ------ ------------------------- --------------
----------------
node1      /lldp
            e0c    S1 (7c:ad:4f:98:6d:f0)    Eth1/1           -
            e5b    S2 (7c:ad:4f:98:8e:3c)    Eth1/1           -
node2      /lldp
            e0c    S1 (7c:ad:4f:98:6d:f0)    Eth1/2           -
            e5b    S2 (7c:ad:4f:98:8e:3c)    Eth1/2           -
```

3. On switch S1 and S2, make sure that the storage ports and switches are connected in the following way (from the switches' perspective) using the command:

   ```
   show lldp neighbors
   ```

Show example

```
S1# show lldp neighbors

Capability Codes: (R) Router, (B) Bridge, (T) Telephone, (C) DOCSIS
Cable Device,
                  (W) WLAN Access Point, (P) Repeater, (S) Station
(O) Other

Device-ID             Local Intf     Holdtime    Capability
Port ID
node1                 Eth1/1         121         S
e0c
node2                 Eth1/2         121         S
e0c
SHFGD1947000186       Eth1/10        120         S
  e0a
SHFGD1947000186       Eth1/11        120         S
  e0a
SHFGB2017000269       Eth1/12        120         S
  e0a
SHFGB2017000269       Eth1/13        120         S
  e0a

S2# show lldp neighbors

Capability Codes: (R) Router, (B) Bridge, (T) Telephone, (C) DOCSIS
Cable Device,
                  (W) WLAN Access Point, (P) Repeater, (S) Station
(O) Other

Device-ID             Local Intf     Holdtime    Capability
Port ID
node1                 Eth1/1         121         S
e5b
node2                 Eth1/2         121         S
e5b
SHFGD1947000186       Eth1/10        120         S
 e0b
SHFGD1947000186       Eth1/11        120         S
 e0b
SHFGB2017000269       Eth1/12        120         S
 e0b
SHFGB2017000269       Eth1/13        120         S
 e0b
```

4. On switch sw2, shut down the ports connected to the storage ports and nodes of the disk shelves.

   Show example

   ```
   cumulus@sw2:~$ net add interface swp1-16 link down
   cumulus@sw2:~$ net pending
   cumulus@sw2:~$ net commit
   ```

5. Move the node storage ports of the controller and disk shelves from the old switch S2 to the new switch sw2, using appropriate cabling supported by NVIDIA SN2100.
6. On switch sw2, bring up the ports connected to the storage ports of the nodes and the disk shelves.

   Show example

   ```
   cumulus@sw2:~$ net del interface swp1-16 link down
   cumulus@sw2:~$ net pending
   cumulus@sw2:~$ net commit
   ```

7. Verify that the storage ports on each node are now connected to the switches in the following way, from the nodes' perspective:

   ```
   network device-discovery show -protocol lldp
   ```

   Show example

   ```
   cluster1::*> network device-discovery show -protocol lldp

   Node/       Local  Discovered
   Protocol    Port   Device (LLDP: ChassisID)  Interface      Platform
   ----------- ------ ------------------------- -------------
   ----------------
   node1      /lldp
               e0c    S1 (7c:ad:4f:98:6d:f0)    Eth1/1         -
               e5b    sw2 (b8:ce:f6:19:1a:7e)   swp1           -

   node2      /lldp
               e0c    S1 (7c:ad:4f:98:6d:f0)    Eth1/2         -
               e5b    sw2 (b8:ce:f6:19:1a:7e)   swp2           -
   ```

8. Verify the network port attributes:

   ```
   storage port show
   ```

Show example

```
cluster1::*> storage port show
                                   Speed                       VLAN
Node           Port Type  Mode    (Gb/s) State    Status       ID
-------------- ---- ----- ------- ------ -------- --------- ----
node1
               e0c  ENET  storage  100   enabled  online      30
               e0d  ENET  storage    0   enabled  offline     30
               e5a  ENET  storage    0   enabled  offline     30
               e5b  ENET  storage  100   enabled  online      30
node2
               e0c  ENET  storage  100   enabled  online      30
               e0d  ENET  storage    0   enabled  offline     30
               e5a  ENET  storage    0   enabled  offline     30
               e5b  ENET  storage  100   enabled  online      30
cluster1::*>
```

9. On switch sw2, verify that all node storage ports are up:

```
net show interface
```

Show example

```
cumulus@sw2:~$ net show interface

State  Name    Spd   MTU    Mode        LLDP
Summary
-----  ------  ----  -----  ----------  --------------------
--------------------
...
...
UP     swp1    100G  9216   Trunk/L2   node1 (e5b)
Master: bridge(UP)
UP     swp2    100G  9216   Trunk/L2   node2 (e5b)
Master: bridge(UP)
UP     swp3    100G  9216   Trunk/L2   SHFFG1826000112 (e0b)
Master: bridge(UP)
UP     swp4    100G  9216   Trunk/L2   SHFFG1826000112 (e0b)
Master: bridge(UP)
UP     swp5    100G  9216   Trunk/L2   SHFFG1826000102 (e0b)
Master: bridge(UP)
UP     swp6    100G  9216   Trunk/L2   SHFFG1826000102 (e0b)
Master: bridge(UP))
...
...
```

10. On switch sw1, shut down the ports connected to the storage ports of the nodes and the disk shelves.

Show example

```
cumulus@sw1:~$ net add interface swp1-16 link down
cumulus@sw1:~$ net pending
cumulus@sw1:~$ net commit
```

11. Move the node storage ports of the controller and the disk shelves from the old switch S1 to the new switch sw1, using appropriate cabling supported by NVIDIA SN2100.
12. On switch sw1, bring up the ports connected to the storage ports of the nodes and the disk shelves.

Show example

```
cumulus@sw1:~$ net del interface swp1-16 link down
cumulus@sw1:~$ net pending
cumulus@sw1:~$ net commit
```

13. Verify that the storage ports on each node are now connected to the switches in the following way, from the nodes' perspective:

    `network device-discovery show -protocol lldp`

    Show example

```
cluster1::*> network device-discovery show -protocol lldp

Node/       Local  Discovered
Protocol    Port   Device (LLDP: ChassisID)  Interface
Platform
----------- ------ ------------------------- --------------
----------------
node1      /lldp
            e0c    sw1 (b8:ce:f6:19:1b:96)   swp1           -
            e5b    sw2 (b8:ce:f6:19:1a:7e)   swp1           -

node2      /lldp
            e0c    sw1  (b8:ce:f6:19:1b:96)  swp2           -
            e5b    sw2  (b8:ce:f6:19:1a:7e)  swp2           -
```

14. Verify the final configuration:

    `storage port show`

    Each port should display enabled for `State` and enabled for `Status`.

Show example

```
cluster1::*> storage port show
                                   Speed                       VLAN
Node           Port Type  Mode    (Gb/s) State    Status       ID
-------------- ---- ----- ------- ------ -------- --------- ----
node1
               e0c  ENET  storage  100   enabled  online      30
               e0d  ENET  storage    0   enabled  offline     30
               e5a  ENET  storage    0   enabled  offline     30
               e5b  ENET  storage  100   enabled  online      30
node2
               e0c  ENET  storage  100   enabled  online      30
               e0d  ENET  storage    0   enabled  offline     30
               e5a  ENET  storage    0   enabled  offline     30
               e5b  ENET  storage  100   enabled  online      30
cluster1::*>
```

15. On switch sw2, verify that all node storage ports are up:

```
net show interface
```

Show example

```
cumulus@sw2:~$ net show interface

State  Name    Spd   MTU    Mode        LLDP
Summary
-----  ------  ----  -----  ----------  --------------------
--------------------
...
...
UP     swp1    100G  9216   Trunk/L2   node1 (e5b)
Master: bridge(UP)
UP     swp2    100G  9216   Trunk/L2   node2 (e5b)
Master: bridge(UP)
UP     swp3    100G  9216   Trunk/L2   SHFFG1826000112 (e0b)
Master: bridge(UP)
UP     swp4    100G  9216   Trunk/L2   SHFFG1826000112 (e0b)
Master: bridge(UP)
UP     swp5    100G  9216   Trunk/L2   SHFFG1826000102 (e0b)
Master: bridge(UP)
UP     swp6    100G  9216   Trunk/L2   SHFFG1826000102 (e0b)
Master: bridge(UP))
...
...
```

16. Verify that both nodes each have one connection to each switch:

```
net show lldp
```

Show example

The following example shows the appropriate results for both switches:

```
cumulus@sw1:~$ net show lldp
LocalPort  Speed  Mode      RemoteHost             RemotePort
---------  -----  --------  ---------------------  -----------
...
swp1       100G   Trunk/L2  node1                  e0c
swp2       100G   Trunk/L2  node2                  e0c
swp3       100G   Trunk/L2  SHFFG1826000112        e0a
swp4       100G   Trunk/L2  SHFFG1826000112        e0a
swp5       100G   Trunk/L2  SHFFG1826000102        e0a
swp6       100G   Trunk/L2  SHFFG1826000102        e0a

cumulus@sw2:~$ net show lldp
LocalPort  Speed  Mode      RemoteHost             RemotePort
---------  -----  --------  ---------------------  -----------
...
swp1       100G   Trunk/L2  node1                  e5b
swp2       100G   Trunk/L2  node2                  e5b
swp3       100G   Trunk/L2  SHFFG1826000112        e0b
swp4       100G   Trunk/L2  SHFFG1826000112        e0b
swp5       100G   Trunk/L2  SHFFG1826000102        e0b
swp6       100G   Trunk/L2  SHFFG1826000102        e0b
```

Step 3: Complete the procedure

1. Enable the Ethernet switch health monitor log collection feature for collecting switch-related log files, using the two commands:

   `system switch ethernet log setup-password` and `system switch ethernet log enable-collection`

   Enter: `system switch ethernet log setup-password`

Show example

```
cluster1::*> system switch ethernet log setup-password
Enter the switch name: <return>
The switch name entered is not recognized.
Choose from the following list:
sw1
sw2

cluster1::*> system switch ethernet log setup-password

Enter the switch name: sw1
RSA key fingerprint is
e5:8b:c6:dc:e2:18:18:09:36:63:d9:63:dd:03:d9:cc
Do you want to continue? {y|n}::[n] y

Enter the password: <enter switch password>
Enter the password again: <enter switch password>

cluster1::*> system switch ethernet log setup-password

Enter the switch name: sw2
RSA key fingerprint is
57:49:86:a1:b9:80:6a:61:9a:86:8e:3c:e3:b7:1f:b1
Do you want to continue? {y|n}:: [n] y

Enter the password: <enter switch password>
Enter the password again: <enter switch password>
```

Followed by:

```
system switch ethernet log enable-collection
```

Show example

```
cluster1::*> system  switch ethernet log enable-collection

Do you want to enable cluster log collection for all nodes in the
cluster?
{y|n}: [n] y

Enabling cluster switch log collection.

cluster1::*>
```

> If any of these commands return an error, contact NetApp support.

2. Initiate the switch log collection feature:

   ```
   system switch ethernet log collect -device *
   ```

   Wait for 10 minutes and then check that the log collection was successful using the command:

   ```
   system switch ethernet log show
   ```

   Show example

   ```
   cluster1::*> system switch ethernet log show
   Log Collection Enabled: true

   Index  Switch                        Log Timestamp        Status
   ------ ---------------------------- -------------------  ---------

   1      sw1 (b8:ce:f6:19:1b:42)      4/29/2022 03:05:25   complete
   2      sw2 (b8:ce:f6:19:1b:96)      4/29/2022 03:07:42   complete
   ```

3. Change the privilege level back to admin:

   ```
   set -privilege admin
   ```

4. If you suppressed automatic case creation, reenable it by invoking an AutoSupport message:

   ```
   system node autosupport invoke -node * -type all -message MAINT=END
   ```

Replace a NVIDIA SN2100 storage switch

You must be aware of certain configuration information, port connections and cabling

requirements when you replace NVIDIA SN2100 storage switches.

Before you begin

You must verify that the following conditions exist before installing the Cumulus software and RCFs on a NVIDIA SN2100 storage switch:

- Your system can support NVIDIA SN2100 storage switches.
- You must have downloaded the applicable RCFs.
- The Hardware Universe provides full details of supported ports and their configurations.

About this task

The existing network configuration must have the following characteristics:

- Make sure that all troubleshooting steps have been completed to confirm that your switch needs replacing.
- Management connectivity must exist on both switches.

> Make sure that all troubleshooting steps have been completed to confirm that your switch needs replacing.

The replacement NVIDIA SN2100 switch must have the following characteristics:

- Management network connectivity must be functional.
- Console access to the replacement switch must be in place.
- The appropriate RCF and Cumulus operating system image must be loaded onto the switch.
- Initial customization of the switch must be complete.

Procedure summary

This procedure replaces the second NVIDIA SN2100 storage switch sw2 with the new NVIDIA SN2100 switch nsw2. The two nodes are node1 and node2.

Steps to complete:

- Confirm the switch to be replaced is sw2.
- Disconnect the cables from switch sw2.
- Reconnect the cables to switch nsw2.
- Verify all device configurations on switch nsw2.

Steps

1. If AutoSupport is enabled on this cluster, suppress automatic case creation by invoking an AutoSupport message:
   `system node autosupport invoke -node * -type all - message MAINT=xh`

   x is the duration of the maintenance window in hours.

2. Change the privilege level to advanced, entering **y** when prompted to continue: `set -privilege advanced`
3. Check on the health status of the storage node ports to make sure that there is connection to storage switch S1:

`storage port show -port-type ENET`

Show example

```
cluster1::*> storage port show -port-type ENET
                                   Speed                      VLAN
Node           Port Type  Mode    (Gb/s) State    Status      ID
-------------- ---- ----- ------- ------ -------- --------- ----
node1
               e3a  ENET  storage 100    enabled  online      30
               e3b  ENET  storage   0    enabled  offline     30
               e7a  ENET  storage   0    enabled  offline     30
               e7b  ENET  storage 100    enabled  online      30
node2
               e3a  ENET  storage 100    enabled  online      30
               e3b  ENET  storage   0    enabled  offline     30
               e7a  ENET  storage   0    enabled  offline     30
               e7b  ENET  storage 100    enabled  online      30
cluster1::*>
```

4. Verify that storage switch sw1 is available:
`network device-discovery show`

Show example

```
cluster1::*> network device-discovery show protocol lldp
Node/      Local Discovered
Protocol   Port  Device (LLDP: ChassisID)  Interface   Platform
--------   ----  -----------------------   ---------   ---------
node1/lldp
           e3a   sw1 (b8:ce:f6:19:1b:42)   swp3        -
node2/lldp
           e3a   sw1 (b8:ce:f6:19:1b:42)   swp4        -
cluster1::*>
```

5. Run the `net show interface` command on the working switch to confirm that you can see both nodes and all shelves:
`net show interface`

Show example

```
cumulus@sw1:~$ net show interface

State  Name    Spd   MTU    Mode        LLDP
Summary
-----  ------  ----  -----  ----------  --------------------
--------------------
...
...
UP     swp1    100G  9216   Trunk/L2   node1 (e3a)
Master: bridge(UP)
UP     swp2    100G  9216   Trunk/L2   node2 (e3a)
Master: bridge(UP)
UP     swp3    100G  9216   Trunk/L2   SHFFG1826000112 (e0b)
Master: bridge(UP)
UP     swp4    100G  9216   Trunk/L2   SHFFG1826000112 (e0b)
Master: bridge(UP)
UP     swp5    100G  9216   Trunk/L2   SHFFG1826000102 (e0b)
Master: bridge(UP)
UP     swp6    100G  9216   Trunk/L2   SHFFG1826000102 (e0b)
Master: bridge(UP))
...
...
```

6. Verify the shelf ports in the storage system:
   `storage shelf port show -fields remote-device, remote-port`

Show example

```
cluster1::*> storage shelf port show -fields remote-device, remote-
port
shelf   id  remote-port   remote-device
-----   --  -----------   -------------
3.20    0   swp3          sw1
3.20    1   -             -
3.20    2   swp4          sw1
3.20    3   -             -
3.30    0   swp5          sw1
3.20    1   -             -
3.30    2   swp6          sw1
3.20    3   -             -
cluster1::*>
```

7. Remove all cables attached to storage switch sw2.
8. Reconnect all cables to the replacement switch nsw2.
9. Recheck the health status of the storage node ports:
   `storage port show -port-type ENET`

   Show example

```
cluster1::*> storage port show -port-type ENET
                                     Speed                      VLAN
Node              Port Type  Mode    (Gb/s) State    Status      ID
---------------- ---- ----- ------- ------ -------- --------- ----
node1
                  e3a  ENET  storage 100    enabled  online      30
                  e3b  ENET  storage   0    enabled  offline     30
                  e7a  ENET  storage   0    enabled  offline     30
                  e7b  ENET  storage 100    enabled  online      30
node2
                  e3a  ENET  storage 100    enabled  online      30
                  e3b  ENET  storage   0    enabled  offline     30
                  e7a  ENET  storage   0    enabled  offline     30
                  e7b  ENET  storage 100    enabled  online      30
cluster1::*>
```

10. Verify that both switches are available:
    `net device-discovery show`

Show example

```
cluster1::*> network device-discovery show protocol lldp
Node/     Local Discovered
Protocol  Port  Device (LLDP: ChassisID)  Interface   Platform
--------  ----  -----------------------   ---------   ---------
node1/lldp
          e3a  sw1 (b8:ce:f6:19:1b:96)    swp1        -
          e7b  nsw2 (b8:ce:f6:19:1a:7e)   swp1        -
node2/lldp
          e3a  sw1 (b8:ce:f6:19:1b:96)    swp2        -
          e7b  nsw2 (b8:ce:f6:19:1a:7e)   swp2        -
cluster1::*>
```

11. Verify the shelf ports in the storage system:
    `storage shelf port show -fields remote-device, remote-port`

    Show example

```
cluster1::*> storage shelf port show -fields remote-device, remote-
port
shelf   id    remote-port     remote-device
-----   --    -----------     -------------
3.20    0     swp3            sw1
3.20    1     swp3            nsw2
3.20    2     swp4            sw1
3.20    3     swp4            nsw2
3.30    0     swp5            sw1
3.20    1     swp5            nsw2
3.30    2     swp6            sw1
3.20    3     swp6            nsw2
cluster1::*>
```

12. Create a password for the Ethernet switch health monitor log collection feature:

    `system switch ethernet log setup-password`

Show example

```
cluster1::*> system switch ethernet log setup-password
Enter the switch name: <return>
The switch name entered is not recognized.
Choose from the following list:
sw1
nsw2

cluster1::*> system switch ethernet log setup-password

Enter the switch name: csw1
Would you like to specify a user other than admin for log
collection? {y|n}: n

Enter the password: <enter switch password>
Enter the password again: <enter switch password>

cluster1::*> system switch ethernet log setup-password

Enter the switch name: nsw2
Would you like to specify a user other than admin for log
collection? {y|n}: n

Enter the password: <enter switch password>
Enter the password again: <enter switch password>
```

13. Enable the Ethernet switch health monitor log collection feature.

```
system switch ethernet log modify -device <switch-name> -log-request true
```

Show example

```
cluster1::*> system switch ethernet log modify -device cs1 -log
-request true

Do you want to modify the cluster switch log collection
configuration? {y|n}: [n] y

Enabling cluster switch log collection.

cluster1::*> system switch ethernet log modify -device cs2 -log
-request true

Do you want to modify the cluster switch log collection
configuration? {y|n}: [n] y

Enabling cluster switch log collection.
```

Wait for 10 minutes and then check that the log collection completes:

```
system switch ethernet log show
```

Show example

```
cluster1::*> system switch ethernet log show
Log Collection Enabled: true

Index  Switch                        Log Timestamp        Status
------ ---------------------------- -------------------  ---------

1      sw1   (b8:ce:f6:19:1b:42)     4/29/2022 03:05:25   complete
2      nsw2  (b8:ce:f6:19:1b:96)     4/29/2022 03:07:42   complete
```

If any of these commands return an error or if the log collection does not complete, contact NetApp support.

14. Change the privilege level back to admin: `set -privilege admin`
15. If you suppressed automatic case creation, re-enable it by invoking an AutoSupport message: `system node autosupport invoke -node * -type all -message MAINT=END`