Switch documentation for ONTAP hardware systems

Install and maintain

NetApp
February 13, 2026

This PDF was generated from https://docs.netapp.com/us-en/ontap-systems-switches/index.html on February 13, 2026. Always check docs.netapp.com for the latest.

Table of Contents

Switch documentation for ONTAP hardware systems . . . 1
Get started . . . 2
What's new for switches . . . 2
New switch support . . . 2
Learn about AFX systems, Cluster, Storage, and Shared switches . . . 3
AFX systems switches . . . 3
Cluster switches . . . 3
Storage switches . . . 4
Shared switches . . . 4
End-of-availability . . . 4
Get up and running with AFX systems, Cluster, Storage, and Shared switches . . . 4
AFX systems switches . . . 7
Cisco Nexus 9332D-GX2B . . . 7
Get started . . . 7
Install hardware . . . 9
Configure software . . . 10
Replace a Cisco Nexus 9332D-GX2B switch . . . 119
Cisco Nexus 9364D-GX2A . . . 147
Get started . . . 147
Install hardware . . . 150
Configure software . . . 150
Replace a Cisco Nexus 9364D-GX2A switch . . . 277
Cluster switches . . . 306
Broadcom-supported BES-53248 . . . 306
Get started . . . 306
Install the hardware . . . 310
Configure the software . . . 313
Upgrade the switch . . . 411
Migrate the switches . . . 455
Replace the switches . . . 492
Cisco Nexus 9336C-FX2 or 9336C-FX2-T . . . 519
Get started . . . 519
Install the hardware . . . 524
Configure the software . . . 536
Migrate the switches . . . 608
Replace the switches . . . 663
NVIDIA SN2100 . . . 695
Get started . . . 695
Install the hardware . . . 698
Configure the software . . . 707
Migrate the switches . . . 783
Replace the switches . . . 840
Storage switches . . . 874

- Cisco Nexus 9336C-FX2 or 9336C-FX2-T . . . 874
  - Get started . . . 874
  - Install the hardware . . . 878
  - Configure the software . . . 889
  - Replace Cisco Nexus 9336C-FX2 and 9336C-FX2-T storage switches . . . 945
- Cisco Nexus 3232C . . . 951
  - Get started . . . 951
  - Install hardware . . . 954
  - Configure software . . . 959
  - Replace a Cisco Nexus 3232C storage switch . . . 997
  - Upgrade a Cisco Nexus 3232C storage switch . . . 1003
- NVIDIA SN2100 . . . 1017
  - Get started . . . 1017
  - Install hardware . . . 1019
  - Configure software . . . 1029
  - Migrate switches . . . 1061
  - Replace a NVIDIA SN2100 storage switch . . . 1071

Shared switches . . . 1079
- Cisco Nexus 9336C-FX2 . . . 1079
  - Get started . . . 1079
  - Install the hardware . . . 1081
  - Configure the software . . . 1091
  - Migrate switches . . . 1161
  - Replace a Cisco Nexus 9336C-FX2 shared switch . . . 1200

Monitor switch health . . . 1219
- Overview of switch health monitor . . . 1219
- Configure switch health monitoring . . . 1219
  - Configuration overview . . . 1219
  - Configure log collection . . . 1219
  - Configure SNMPv3 for your switch (Optional) . . . 1226
- Check switch health . . . 1244
  - Health check overview . . . 1244
  - Manage the monitoring of Ethernet Switches . . . 1244
  - Verify the monitoring of Ethernet switches . . . 1245
  - Troubleshoot alerts . . . 1246
- Log collection . . . 1247
  - Log collection overview . . . 1247
  - Troubleshoot log collection . . . 1247

End-of-availability switches . . . 1248
- End-of-availability . . . 1248
  - End-of-sale and End-of-life announcements . . . 1248
- Cisco Nexus 3232C . . . 1248
  - Get started . . . 1248
  - Install hardware . . . 1251
  - Configure software . . . 1260

Migrate switches 1322
Replace switches 1343
Cisco 3232C storage switches 1384
Cisco Nexus 3132Q-V 1391
Get started 1391
Install hardware 1394
Configure software 1403
Migrate switches 1466
Replace switches 1490
Cisco Nexus 92300YC 1534
Get started 1534
Install hardware 1538
Configure the software 1550
Migrate switches 1591
Replace switches 1609
NetApp CN1610 1640
Overview of installation and configuration for NetApp CN1610 switches 1640
Install and configure workflow for NetApp CN1610 switches 1641
Documentation requirements for NetApp CN1610 switches 1641
Install and configure 1642
Migrate switches 1678
Replace switches 1705
Legal notices 1731
Copyright 1731
Trademarks 1731
Patents 1731
Privacy policy 1731

Switch documentation for ONTAP hardware systems

Get started

What's new for switches

Learn about the new switches for FAS and AFF systems. For additional switch information, see the NetApp Hardware Universe.

New switch support

Switches	Description	Available beginning
32-port 400GbE ports Cisco switch (X190300-CS-PI and X190300-PE)	Cisco 9332D-GX2B Intra-Cluster/HA/Storage switch support.	ONTAP 9.17.1
64-port 400GbE ports Cisco switch (X190310-CS-PI)	Cisco 9364D-GX2A Intra-Cluster/HA/Storage switch support.	ONTAP 9.17.1
12-port 10/25/40/100GbE Cisco Nexus 9336C-FX2-T cluster and storage switch (X190212-CS-PE and X190212-CS-PI)	Supports 10/25/40/100GbE cluster configurations and 100GbE storage (switch-attached storage) configurations.	ONTAP 9.10.1
12-port 10/25/40/100GbE Cisco Nexus 9336C-FX2-T cluster and storage switch (X190212-CS-PE and X190212-CS-PI)	Supports 10/25/40/100GbE cluster configurations and 100GbE storage (switch-attached storage) configurations.	ONTAP 9.10.1
16-port 100GbE NVIDIA switch (X190006-PE and X190006-PI)	NVIDIA SN2100 cluster interconnect switch and storage switch support, including support for MetroCluster IP configurations.	ONTAP 9.10.1
36-port 100GbE Cisco switch (X190200-CS-PE and X190200-CS-PI)	Supports a shared Infrastructure (Cluster, HA, and switch-attached storage) on the same pair of Cisco Nexus 9336C-FX2 switches, including support for MetroCluster IP configurations.	ONTAP 9.9.1
36-port 100GbE Cisco switch (X190200-CS-PE and X190200-CS-PI), (X190210-FE-PE and X190210-FE-PI)	Cisco Nexus 9336C-FX2 cluster interconnect switch and storage switch support for AFF and ASA storage systems, as well as for front-end data connectivity.	ONTAP 9.8

Switches	Description	Available beginning
Broadcom BES-53248 switch (X190005 and X190005R)	Broadcom BES-53248 cluster interconnect switch support for AFF/FAS controllers with 10/25GbE and 40/100GbE ports.	ONTAP 9.8
36-port 100GbE Cisco switch (X190200) and 32-port 100GbE Cisco switch (X190100 and X190100R)	Cisco Nexus 3232C storage switch support to connect NS224 NVMe drive shelves AFF and ASA storage systems: • AFF A800/AFF ASA A800 • AFF A700/AFF ASA A700 • AFF A400/AFF ASA A400 • AFF A320	ONTAP 9.8

Learn about AFX systems, Cluster, Storage, and Shared switches

NetApp offers AFX systems, cluster, storage, and shared switches that deliver internal communications with the ability to non-disruptively move data and network interfaces across the cluster.

The “front-end” switches provide connectivity to host storage, while the “back-end” cluster switches provide connections between two or more NetApp controllers.

Only NetApp-validated back-end switches (ordered from NetApp) are supported.

AFX systems switches

AFX systems switches allow you create fast, energy-efficient, and space-saving network switches. Their small size and high port density make them ideal for handling large networks. The ports support different speeds and can be split into multiple connections. NetApp-supported AFX systems switches include:

- Cisco Nexus 9332D-GX2B
- Cisco Nexus 9364D-GX2A

Cluster switches

Cluster switches allow you to build ONTAP clusters with more than two nodes. NetApp-supported cluster switches include:

- Broadcom BES-53248
- Cisco Nexus 9336C-FX2
- NVIDIA SN2100

Storage switches

Storage switches allow you to route data between servers and storage arrays in a Storage Area Network (SAN). NetApp-supported storage switches include:

- Cisco Nexus 9336C-FX2
- NVIDIA SN2100

Shared switches

Shared switches allow you to combine cluster and storage functionality into a shared switch configuration, by supporting the use of shared cluster and storage RCFs. The NetApp-supported shared switch is:

- Cisco Nexus 9336C-FX2

End-of-availability

The following storage switches are no longer available for purchase, but are still supported:

- Cisco Nexus 3232C
- Cisco Nexus 3132Q-V
- Cisco Nexus 92300YC
- NetApp CN1610

Get up and running with AFX systems, Cluster, Storage, and Shared switches

To get up and running with AFX systems, cluster, storage, and shared switches, you install hardware components and configure your switch.

Deploying the switch involves the following workflow.

Install the switch hardware

Install your switches in the rack or cabinet. Access the following instructions for your switch model.

AFX systems switches	Cluster switches	Storage switches	Shared switches
• Install Cisco Nexus 9332D-GX2B switch • Install Cisco Nexus 9364D-GX2A switch	• Install BES-53248 switch • Install Cisco Nexus 9336C-FX2 switch • Install NVIDIA SN2100 switch	• Install Cisco Nexus 9336C-FX2 switch • Install NVIDIA SN2100 switch	• Install Cisco Nexus 9336C-FX2 switch

Install the storage system and storage shelves

Install your storage system and storage shelves in the cabinet or rack. Access the install and setup instructions for your platform model.

- AFX systems
- AFF systems
- ASA systems
- ASA r2 systems
- FAS systems

3 Cable the switches to the controllers

The ONTAP systems install and setup instructions include instructions for cabling the controller ports to the switch. However, if you need lists of supported cables and transceivers, and detailed information about the host ports for your switch, access the following instructions for your switch model.

AFX systems switches

- Cable the Cisco Nexus 9332D-GX2B switch
- Cable the Cisco Nexus 9364D-GX2A switch

Cluster switches

- Cable the BES-53248 switch
- Cable the Cisco Nexus 9336C-FX2 switch
- Cable the NVIDIA SN2100 switch

Storage switches

- Cable the Cisco Nexus 9336C-FX2 switch
- Cable the NVIDIA SN2100 switch

Shared switches

- Cable the Cisco Nexus 9336C-FX2 switch

4 Configure the switch software

To install and configure the software on your switch, follow the software install workflow for your switch model.

AFX systems switches

- Install software for Cisco Nexus 9332D-GX2B switch
- Install software for Cisco Nexus 9364D-GX2A switch

Cluster switches

- Install software for BES-53248 switches
- Install software for Cisco Nexus 9336C-FX2 switch
- Install software for NVIDIA SN2100 switch

Storage switches

- Install software for Cisco Nexus 9336C-FX2 switch
- Install software for NVIDIA SN2100 switch

Shared switches

- Install software for Cisco Nexus 9336C-FX2 switch

5 Complete system setup

After you have configured your switches and installed the required software, access the install and setup instructions for your ONTAP systems platform model to complete your system setup.

- AFX systems
- AFF systems
- ASA systems
- ASA r2 systems
- FAS systems

6 **Complete ONTAP configuration**

After you have installed and set up your ONTAP systems controllers and switches, you must complete configuring your storage in ONTAP. Access the following instructions according to your deployment configuration.

- For ONTAP deployments, see Configure ONTAP.
- For ONTAP with MetroCluster deployments, see Configure Metrocluster with ONTAP.

AFX systems switches

Cisco Nexus 9332D-GX2B

Get started

Installation and setup workflow for Cisco 9332D-GX2B switches

The Cisco 9332D-GX2B switch is part of the Cisco Nexus 9000 platform. The AFX systems switches allow you to build ONTAP clusters with more than two nodes.

Follow these workflow steps to install and setup your to Cisco 9332D-GX2B switches.

1. **Review the switch port details**

Review the port details for the Cisco 9332D-GX2B switch.

2. **Review the required documentation**

Review specific switch and controller documentation to set up your 9332D-GX2B switches and the ONTAP cluster.

3. **Review the Smart Call Home requirements**

Review the requirements for the Cisco Smart Call Home feature, used to monitor the hardware and software components on your network.

4. **Install the hardware**

Install the switch hardware.

5. **Configure the software**

Configure the switch software.

Port details for Cisco Nexus 9332D-GX2B switches

The Cisco Nexus 9332D-GX2B switch is part of the Cisco Nexus 9000 platform. The AFX system switches allow you to build ONTAP clusters with more than two nodes.

Cisco Nexus 9332D-GX2B port details

Ports	Description
Ethernet1/1/1-4 to Ethernet1/30/1-4	4x100GbE mode for cluster, HA, and storage connections

Ports	Description
Ethernet1/31, Ethernet1/32	400GbE ISL

See the Hardware Universe for details of ports used by the platform. See What additional information do I need to install my equipment that is not in HWU? for more information about switch installation requirements.

Documentation requirements for Cisco Nexus 9332D-GX2B switches

For Cisco Nexus 9332D-GX2B switch installation and maintenance, be sure to review specific switch and controller documentation to set up your 9332D-GX2B switches and ONTAP cluster.

Switch documentation

To set up the Cisco Nexus 9332D-GX2B switches, you need the following documentation from the Cisco Nexus 9000 Series Switches Support page:

Document title	Description
Cisco Nexus 9332D-GX2B NX-OS Mode Switch Hardware Installation Guide	Provides detailed information about site requirements, switch hardware details, and installation options.
Cisco Nexus 9000 Series Switch Software Configuration Guides (choose the guide for the NX-OS release installed on your switches)	Provides initial switch configuration information that you need before you can configure the switch for ONTAP operation.
Cisco Nexus 9000 Series NX-OS Software Upgrade and Downgrade Guide (choose the guide for the NX-OS release installed on your switches)	Provides information on how to downgrade the switch to ONTAP supported switch software, if necessary.
Cisco Nexus 9000 Series NX-OS Command Reference	Provides links to the various command references provided by Cisco.
Cisco Nexus 9000 Series NX-OS System Message Reference	Describes the system messages for Cisco Nexus 9000 series switches, those that are informational, and others that might help diagnose problems with links, internal hardware, or the system software.
Cisco Nexus 9000 Series NX-OS Release Notes (choose the notes for the NX-OS release installed on your switches)	Describes the features, bugs, and limitations for the Cisco Nexus 9000 Series.

Document title	Description
Regulatory Compliance and Safety Information for Cisco Nexus 9000 Series	Provides international agency compliance, safety, and statutory information for the Nexus 9000 series switches.

ONTAP systems documentation

To set up an ONTAP system, you need the following documents for your version of the operating system from the ONTAP 9 Documentation Center.

Name	Description
AFX systems documentation	Describes how to install NetApp hardware.
ONTAP documentation	Provides detailed information about all aspects of the ONTAP releases.
Hardware Universe	Provides NetApp hardware configuration and compatibility information.

Smart Call Home requirements

To use Smart Call Home, you must configure a cluster network switch to communicate using email with the Smart Call Home system. In addition, you can optionally set up your cluster network switch to take advantage of Cisco's embedded Smart Call Home support feature.

Smart Call Home monitors the hardware and software components on your network. When a critical system configuration occurs, it generates an email-based notification and raises an alert to all the recipients that are configured in your destination profile.

Smart Call Home monitors the hardware and software components on your network. When a critical system configuration occurs, it generates an email-based notification and raises an alert to all the recipients that are configured in your destination profile.

Before you can use Smart Call Home, be aware of the following requirements:

- An email server must be in place.
- The switch must have IP connectivity to the email server.
- The contact name (SNMP server contact), phone number, and street address information must be configured. This is required to determine the origin of messages received.
- A CCO ID must be associated with an appropriate Cisco SMARTnet Service contract for your company.
- Cisco SMARTnet Service must be in place for the device to be registered.

The Cisco support site contains information about the commands to configure Smart Call Home.

Install hardware

Go to the AFX install and setup workflow to learn how to install and setup the switch hardware and controller hardware for your system.

The AFX install and setup documentation includes information such as:

- Instructions for getting the site ready, unpacking the boxes and comparing the contents of the boxes to the packing slip, and registering the system to access support benefits.
- Instructions for installing the switches, controllers, and storage shelf in a NetApp cabinet or telco rack.
- Instructions for cabling your system, including cabling the controller storage to switch connections and cabling the shelf to switch connections.

Configure software

Configure software workflow for Cisco 9332D-GX2B switches

To install and configure the software for a Cisco 9332D-GX2B switch and to install or upgrade the Reference Configuration File (RCF), follow these steps:

1. **Configure the 9332D-GX2B switch**

Configure the Cisco 9332D-GX2B switch.

2. **Prepare to install the NX-OS software and RCF**

Install the Cisco NX-OS software and reference configuration files (RCFs) on the Cisco 9332D-GX2B switches.

3. **Install or upgrade the NX-OS software**

Download and install or upgrade the NX-OS software on the Cisco 9332D-GX2B switch.

4. **Install or upgrade the RCF**

Install or upgrade the RCF after setting up the Cisco 9332D-GX2B switch for the first time. You can also use this procedure to upgrade your RCF version.

5. **Verify SSH is enabled on the Cisco 9332D-GX2B switches**

Verify that SSH is enabled on the Cisco 9332D-GX2B switch for use with the Ethernet Switch Health Monitor (CSHM) and log collection features.

6. **Reset the switch to factory defaults**

Erase the Cisco 9332D-GX2B switch settings.

Once you have finished configuring your switches, go to Power on your AFX 1K storage system.

Configure the 9332D-GX2B switch

Follow this procedure to configure the Cisco Nexus 9332D-GX2B switch.

Before you begin

Make sure you have:

- Powered on your switches.
- Access to an HTTP, FTP, or TFTP server at the installation site to download the applicable NX-OS and Reference Configuration File (RCF) releases.
- Applicable NX-OS version, downloaded from the Cisco software download page.

> - NX-OS 10.4.2 is the only supported version for Cisco Nexus 9332D-GX2B switches in an ONTAP cluster.
> - Do not upgrade or downgrade your NX-OS version to an unsupported version; only 10.4.2 is currently supported.

- Applicable licenses, network and configuration information, and cables.
- Applicable NetApp shared network and management network RCFs downloaded from the NetApp Support Site at mysupport.netapp.com. All Cisco shared network and management network switches arrive with the standard Cisco factory-default configuration. These switches also have the current version of the NX-OS software but do not have the RCFs loaded.
- Required switch and ONTAP documentation.

Steps

1. Perform an initial configuration of the shared network switches.

   Provide applicable responses to the following initial setup questions when you first boot the switch. Your site's security policy defines the responses and services to enable.

Prompt	Response
Abort Auto Provisioning and continue with normal setup? (yes/no)	Respond with **yes**. The default is no.
Do you want to enforce secure password standard? (yes/no)	Respond with **yes**. The default is yes.
Enter the password for admin.	The default password is "admin"; you must create a new, strong password. A weak password can be rejected.
Would you like to enter the basic configuration dialog? (yes/no)	Respond with **yes** at the initial configuration of the switch.
Create another login account? (yes/no)	Your answer depends on your site's policies on alternate administrators. The default is **no**.
Configure read-only SNMP community string? (yes/no)	Respond with **no**. The default is no.

Prompt	Response
Configure read-write SNMP community string? (yes/no)	Respond with **no**. The default is no.
Enter the switch name.	Enter the switch name, which is limited to 63 alphanumeric characters.
Continue with Out-of-band (mgmt0) management configuration? (yes/no)	Respond with **yes** (the default) at that prompt. At the mgmt0 IPv4 address: prompt, enter your IP address: ip_address.
Configure the default-gateway? (yes/no)	Respond with **yes**. At the IPv4 address of the default-gateway: prompt, enter your default_gateway.
Configure advanced IP options? (yes/no)	Respond with **no**. The default is no.
Enable the telnet service? (yes/no)	Respond with **no**. The default is no.
Enabled SSH service? (yes/no)	Respond with **yes**. The default is yes. SSH is recommended when using Ethernet Switch Health Monitor (CSHM) for its log collection features. SSHv2 is also recommended for enhanced security.
Enter the type of SSH key you want to generate (dsa/rsa/rsa1).	The default is **rsa**.
Enter the number of key bits (1024-2048).	Enter the number of key bits from 1024 to 2048.
Configure the NTP server? (yes/no)	Respond with **no**. The default is no.
Configure default interface layer (L3/L2)	Respond with **L2**. The default is L2.
Configure default switch port interface state (shut/noshut)	Respond with **noshut**. The default is noshut.
Configure CoPP system profile (strict/moderate/lenient/dense)	Respond with **strict**. The default is strict.

Prompt	Response
Would you like to edit the configuration? (yes/no)	You should see the new configuration at this point. Review and make any necessary changes to the configuration you just entered. Respond with **no** at the prompt if you are satisfied with the configuration. Respond with **yes** if you want to edit your configuration settings.
Use this configuration and save it? (yes/no)	Respond with **yes** to save the configuration. This automatically updates the kickstart and system images. If you do not save the configuration at this stage, none of the changes will be in effect the next time you reboot the switch.

2. Verify the configuration choices you made in the display that appears at the end of the setup, and make sure that you save the configuration.
3. Check the version on the shared network switches, and if necessary, download the NetApp-supported version of the software to the switches from the Cisco software download page.

What's next?

After you've configured your switches, you prepare to install the NX-OS software and RCF.

Prepare to install NX-OS software and RCF

Before you install the NX-OS software and the Reference Configuration File (RCF), follow this procedure.

About the examples

The examples in this procedure use the following switch and node nomenclature:

- The names of the two Cisco switches are cs1 and cs2.
- The node names are node1-01, node1-02, node1-03, and node1-04.
- The cluster LIF names are:
  - node1-01_clus1 and node1-01_clus2 for node1-01
  - node1-02_clus1 and node1-02_clus2 for node1-02
  - node1-03_clus1 and node1-03_clus2 for node1-03
  - node1-04_clus1 and node1-04_clus2 for node1-04
- The `cluster1::*>` prompt indicates the name of the cluster.

About this task

The procedure requires the use of both ONTAP commands and Cisco Nexus 9000 Series Switches commands; ONTAP commands are used unless otherwise indicated.

Steps

1. If AutoSupport is enabled on this cluster, suppress automatic case creation by invoking an AutoSupport message: `system node autosupport invoke -node * -type all -message MAINT=x h`

where x is the duration of the maintenance window in hours.

> The AutoSupport message notifies technical support of this maintenance task so that automatic case creation is suppressed during the maintenance window.

2. Change the privilege level to advanced, entering **y** when prompted to continue:

```
set -privilege advanced
```

The advanced prompt (`*>`) appears.

3. Check the administrative and operational status of each port.
   a. **Cluster ports**
      i. Display how many cluster interconnect interfaces are configured in each node for each switch:

```
network device-discovery show -protocol cdp
```

Show example

```
cluster1::*> network device-discovery show -protocol cdp
Node/       Local  Discovered
Protocol    Port   Device (LLDP: ChassisID) Interface
Platform
----------- ------ ----------------------- ----------------
----------------
node1-01/cdp
            e10a   cs1(FLMXXXXXXXX)         Ethernet1/16/3
N9K-C9332D-GX2B
            e10b   cs2(FDOXXXXXXXX)         Ethernet1/16/3
N9K-C9332D-GX2B
            e11a   cs1(FLMXXXXXXXX)         Ethernet1/16/4
N9K-C9332D-GX2B
            e11b   cs2(FDOXXXXXXXX)         Ethernet1/16/4
N9K-C9332D-GX2B
            e1a    cs1(FLMXXXXXXXX)         Ethernet1/16/1
N9K-C9332D-GX2B
            e1b    cs2(FDOXXXXXXXX)         Ethernet1/16/1
N9K-C9332D-GX2B
            .
            .
            .
            e7a    cs1(FLMXXXXXXXX)         Ethernet1/16/2
N9K-C9332D-GX2B
            e7b    cs2(FDOXXXXXXXX)         Ethernet1/16/2
N9K-C9332D-GX2B

node1-02/cdp
            e10a   cs1(FLMXXXXXXXX)         Ethernet1/16/3
N9K-C9332D-GX2B
            e10b   cs2(FDOXXXXXXXX)         Ethernet1/16/3
N9K-C9332D-GX2B
            e11a   cs1(FLMXXXXXXXX)         Ethernet1/16/4
N9K-C9332D-GX2B
            e11b   cs2(FDOXXXXXXXX)         Ethernet1/16/4
N9K-C9332D-GX2B
            e1a    cs1(FLMXXXXXXXX)         Ethernet1/16/1
N9K-C9332D-GX2B
            e1b    cs2(FDOXXXXXXXX)         Ethernet1/16/1
N9K-C9332D-GX2B
            .
            .
            .
            e7a    cs1(FLM284504N6)         Ethernet1/16/2
```

```
N9K-C9332D-GX2B
            e7b    cs1(FDO2846056X)         Ethernet1/16/2
N9K-C9332D-GX2B
.
.
.
```

ii. Display the network port attributes:

```
network port show -ipspace Cluster
```

Show example

```
cluster1::*> network port show -ipspace Cluster

Node: node1-01

Ignore
                                                  Speed(Mbps)
Health   Health
Port      IPspace      Broadcast Domain Link MTU  Admin/Oper
Status   Status
--------- ------------ ---------------- ---- ---- -----------
-------- ------
e7a       Cluster      Cluster          up   9000  auto/100000
healthy false
e7b       Cluster      Cluster          up   9000  auto/100000
healthy false


Node: node1-02

Ignore
                                                  Speed(Mbps)
Health   Health
Port      IPspace      Broadcast Domain Link MTU  Admin/Oper
Status   Status
--------- ------------ ---------------- ---- ---- -----------
-------- ------
e7a       Cluster      Cluster          up   9000  auto/100000
healthy false
e7b       Cluster      Cluster          up   9000  auto/100000
healthy false


Node: node1-03

Ignore
                                                  Speed(Mbps)
Health   Health
Port      IPspace      Broadcast Domain Link MTU  Admin/Oper
Status   Status
--------- ------------ ---------------- ---- ---- -----------
-------- ------
e7a       Cluster      Cluster          up   9000  auto/100000
healthy false
e7b       Cluster      Cluster          up   9000  auto/100000
```

```
healthy false


Node: node1-04

Ignore
                                                          Speed(Mbps)
Health   Health
Port      IPspace      Broadcast Domain Link MTU  Admin/Oper
Status   Status
--------- ------------ ---------------- ---- ---- -----------
-------- ------
e7a       Cluster      Cluster          up   9000  auto/100000
healthy false
e7b       Cluster      Cluster          up   9000  auto/100000
healthy false

8 entries were displayed.
```

iii. Display information about the cluster LIFs:

```
network interface show -vserver Cluster
```

Show example

```
cluster1::*> network interface show -vserver Cluster

            Logical       Status     Network
Current   Current Is
Vserver     Interface     Admin/Oper Address/Mask       Node
Port    Home
----------- ------------ ---------- ------------------
--------- ------- ----
Cluster
            node1-01_clus1 up/up     169.254.36.44/16   node1-
01  e7a     true
            node1-01_clus2 up/up     169.254.7.5/16     node1-
01  e7b     true
            node1-02_clus1 up/up     169.254.197.206/16 node1-
02  e7a     true
            node1-02_clus2 up/up     169.254.195.186/16 node1-
02  e7b     true
            node1-03_clus1 up/up     169.254.192.49/16  node1-
03  e7a     true
            node1-03_clus2 up/up     169.254.182.76/16  node1-
03  e7b     true
            node1-04_clus1 up/up     169.254.59.49/16   node1-
04  e7a     true
            node1-04_clus2 up/up     169.254.62.244/16  node1-
04  e7b     true

8 entries were displayed.
```

b. **HA ports**

   i. Display information about the HA ports:

   ```
   ha interconnect status show -node <node-name>
   ```

Show example

```
cluster1::*> ha interconnect status show -node node1-01
  (system ha interconnect status show)

                        Node: node1-01
                Link 0 Status: up
                Link 1 Status: up
            Is Link 0 Active: true
            Is Link 1 Active: true
          IC RDMA Connection: up
                        Slot: 0
               Debug Firmware: no


Interconnect Port 0 :
                   Port Name: e1a-17
                         MTU: 4096
             Link Information: ACTIVE


Interconnect Port 1 :
                   Port Name: e1b-18
                         MTU: 4096
             Link Information: ACTIVE

cluster1::*> ha interconnect status show -node node1-02
  (system ha interconnect status show)

                        Node: node1-02
                Link 0 Status: up
                Link 1 Status: up
            Is Link 0 Active: true
            Is Link 1 Active: true
          IC RDMA Connection: up
                        Slot: 0
               Debug Firmware: no


Interconnect Port 0 :
                   Port Name: e1a-17
                         MTU: 4096
             Link Information: ACTIVE


Interconnect Port 1 :
```

```
                  Port Name: e1b-18
                        MTU: 4096
           Link Information: ACTIVE
.
.
.
```

c. **Storage ports**

i. Display information about the storage ports:

```
storage port show -port-type ENET
```

Show example

```
cluster1::*> storage port show -port-type ENET

                                     Speed
Node                Port Type  Mode    (Gb/s) State    Status
------------------ ---- ----- ------- ------ --------
-----------
node1-01
                    e10a ENET  -          100 enabled  online
                    e10b ENET  -          100 enabled  online
                    e11a ENET  -          100 enabled  online
                    e11b ENET  -          100 enabled  online
node1-02
                    e10a ENET  -          100 enabled  online
                    e10b ENET  -          100 enabled  online
                    e11a ENET  -          100 enabled  online
                    e11b ENET  -          100 enabled  online
node1-03
                    e10a ENET  -          100 enabled  online
                    e10b ENET  -          100 enabled  online
                    e11a ENET  -          100 enabled  online
node1-04
                    e10a ENET  -          100 enabled  online
                    e10b ENET  -          100 enabled  online
                    e11a ENET  -          100 enabled  online
                    e11b ENET  -          100 enabled  online
16 entries were displayed.
```

d. **Storage shelf ports**

i. Verify that all the storage shelf ports are up with a healthy status:

```
storage shelf port show
```

Show example

```
cluster1::*> storage shelf port show

Shelf ID Module State        Internal?
-------- -- ------ ---------- ---------
1.1
         0 A      connected    false
         1 A      connected    false
         2 A      connected    false
         3 A      connected    false
         4 A      connected    false
         5 A      connected    false
         6 A      connected    false
         7 A      connected    false
         8 B      connected    false
         9 B      connected    false
        10 B      connected    false
        11 B      connected    false
        12 B      connected    false
        13 B      connected    false
        14 B      connected    false
        15 B      connected    false

16 entries were displayed.
```

ii. Verify the connection status of all the storage shelf ports:

```
storage shelf port show -fields remote-device,remote-
port,connector-state
```

Show example

```
cluster1::*> storage shelf port show -fields remote-
device,remote-port,connector-state

shelf id connector-state remote-port    remote-device
----- -- -------------- -------------- -----------------
1.1   0  connected       Ethernet1/17/1 CX9332D-cs1
1.1   1  connected       Ethernet1/15/1 CX9364D-cs1
1.1   2  connected       Ethernet1/17/2 CX9332D-cs1
1.1   3  connected       Ethernet1/15/2 CX9364D-cs1
1.1   4  connected       Ethernet1/17/3 CX9332D-cs1
1.1   5  connected       Ethernet1/15/3 CX9364D-cs1
1.1   6  connected       Ethernet1/17/4 CX9332D-cs1
1.1   7  connected       Ethernet1/15/4 CX9364D-cs1
1.1   8  connected       Ethernet1/19/1 CX9332D-cs1
1.1   9  connected       Ethernet1/17/1 CX9364D-cs1
1.1   10 connected       Ethernet1/19/2 CX9332D-cs1
1.1   11 connected       Ethernet1/17/2 CX9364D-cs1
1.1   12 connected       Ethernet1/19/3 CX9332D-cs1
1.1   13 connected       Ethernet1/17/3 CX9364D-cs1
1.1   14 connected       Ethernet1/19/4 CX9332D-cs1
1.1   15 connected       Ethernet1/17/4 CX9364D-cs1

16 entries were displayed.
```

4. Verify the connectivity of the remote cluster interfaces.

   a. You can use the `network interface check cluster-connectivity show` command to display the details of an accessibility check for cluster connectivity:

   ```
   network interface check cluster-connectivity show
   ```

Show example

```
cluster1::*> network interface check cluster-connectivity show

                                  Source           Destination
Packet
Node   Date                       LIF              LIF
Loss
------ -------------------------- ---------------
-------------- -----------
node1-01
       6/4/2025 03:13:33 -04:00   node1-01_clus2  node1-02_clus1
none
       6/4/2025 03:13:34 -04:00   node1-01_clus2  node1-02_clus1
none


node1-02
       6/4/2025 03:13:33 -04:00   node1-02_clus2  node1-01_clus1
none
       6/4/2025 03:13:34 -04:00   node1-02_clus2  node1-01_clus2
none
.
.
.
```

b. Alternatively, you can use the `cluster ping-cluster -node <node-name>` command to check the connectivity:

```
cluster ping-cluster -node <node-name>
```

Show example

```
cluster1::*> cluster ping-cluster -node local
Host is node1-04
Getting addresses from network interface table...
Cluster node1-01_clus1 169.254.36.44 node1-01 e7a
Cluster node1-01_clus2 169.254.7.5   node1-01 e7b
Cluster node1-02_clus1 169.254.197.206 node1-02 e7a
Cluster node1-02_clus2 169.254.195.186 node1-02 e7b
Cluster node1-03_clus1 169.254.192.49 node1-03 e7a
Cluster node1-03_clus2 169.254.182.76 node1-03 e7b
Cluster node1-04_clus1 169.254.59.49 node1-04 e7a
Cluster node1-04_clus2 169.254.62.244 node1-04 e7b
Local = 169.254.59.49 169.254.62.244
Remote = 169.254.36.44 169.254.7.5 169.254.197.206
169.254.195.186 169.254.192.49 169.254.182.76
Cluster Vserver Id = 4294967293
Ping status:
............
Basic connectivity succeeds on 12 path(s)
Basic connectivity fails on 0 path(s)
................................................
Detected 9000 byte MTU on 12 path(s):
    Local 169.254.59.49 to Remote 169.254.182.76
    Local 169.254.59.49 to Remote 169.254.192.49
    Local 169.254.59.49 to Remote 169.254.195.186
    Local 169.254.59.49 to Remote 169.254.197.206
    Local 169.254.59.49 to Remote 169.254.36.44
    Local 169.254.59.49 to Remote 169.254.7.5
    Local 169.254.62.244 to Remote 169.254.182.76
    Local 169.254.62.244 to Remote 169.254.192.49
    Local 169.254.62.244 to Remote 169.254.195.186
    Local 169.254.62.244 to Remote 169.254.197.206
    Local 169.254.62.244 to Remote 169.254.36.44
    Local 169.254.62.244 to Remote 169.254.7.5
Larger than PMTU communication succeeds on 12 path(s)
RPC status:
6 paths up, 0 paths down (tcp check)
6 paths up, 0 paths down (udp check)
```

5. Verify that the auto-revert command is enabled on all cluster LIFs:

```
network interface show -vserver Cluster -fields auto-revert
```

Show example

```
cluster1::*> network interface show -vserver Cluster -fields auto-
revert
        Logical
Vserver Interface          Auto-revert
------- ------------------ -----------
Cluster node1-01_clus1     true
Cluster node1-01_clus2     true
Cluster node1-02_clus1     true
Cluster node1-02_clus2     true
Cluster node1-03_clus1     true
Cluster node1-03_clus2     true
Cluster node1-04_clus1     true
Cluster node1-04_clus2     true

8 entries were displayed.
```

What's next?

After you've prepared to install the NX-OS software and RCF, you install or upgrade the NX-OS software.

Install or upgrade the NX-OS software

Follow this procedure to install or upgrade the NX-OS software on the Nexus 9332D-GX2B switch.

Review requirements

Before you begin

Verify the following:

- Complete the procedure in Prepare to install NX-OS and RCF.
- A current backup of the switch configuration.
- A fully functioning cluster (no errors in the logs or similar issues).

Suggested documentation

- Cisco Ethernet switch page

  Consult the switch compatibility table for the supported ONTAP and NX-OS versions.

- Software Upgrade and downgrade guides

  Refer to the appropriate software and upgrade guides available on the Cisco website for complete documentation on the Cisco switch upgrade and downgrade procedures.

- Cisco Nexus 9000 and 3000 Upgrade and ISSU Matrix

Provides information on Disruptive Upgrade/Downgrade for Cisco NX-OS software on Nexus 9000 Series Switches
based on your current and target releases.

On the page, select **Disruptive Upgrade** and select your current release and target release from the dropdown list.

About the examples

The examples in this procedure use the following switch and node nomenclature:

- The names of the two Cisco switches are cs1 and cs2.
- The node names are node1-01, node1-02, node1-03, and node1-04.
- The cluster LIF names are node1-01_clus1, node1-01_clus2, node1-02_clus1, node1-02_clus2, node1-03_clus1, node1-03_clus2, node1-04_clus1, and node1-04_clus2.
- The `cluster1::*>` prompt indicates the name of the cluster.

Install the software

The procedure requires the use of both ONTAP commands and Cisco Nexus 9000 Series Switches commands; ONTAP commands are used unless otherwise indicated.

- NX-OS 10.4.2 is the only supported version for Cisco Nexus 9332D-GX2B switches in an ONTAP cluster.
- Do not upgrade or downgrade your NX-OS version to an unsupported version; only 10.4.2 is currently supported.

Steps

1. Connect the switch to the management network.
2. Use the ping command to verify connectivity to the server hosting the NX-OS software and the RCF.

   Show example

   This example verifies that the switch can reach the server at IP address 172.19.2.1:

   ```
   cs2# ping 172.19.2.1
   Pinging 172.19.2.1 with 0 bytes of data:

   Reply From 172.19.2.1: icmp_seq = 0. time= 5910 usec.
   ```

3. Display the cluster ports on each node that are connected to the cluster switches:

   ```
   network device-discovery show
   ```

Show example

```
cluster1::*> network device-discovery show

Node/       Local  Discovered
Protocol    Port   Device (LLDP: ChassisID) Interface
Platform
----------- ------ ----------------------- ----------------
----------------
node1-01/cdp
            e10a   cs1(FLMXXXXXXXX)         Ethernet1/16/3    N9K-
C9332D-GX2B
            e10b   cs2(FDOXXXXXXXX)         Ethernet1/16/3    N9K-
C9332D-GX2B
            e11a   cs1(FLMXXXXXXXX)         Ethernet1/16/4    N9K-
C9332D-GX2B
            e11b   cs2(FDOXXXXXXXX)         Ethernet1/16/4    N9K-
C9332D-GX2B
            e1a    cs1(FLMXXXXXXXX)         Ethernet1/16/1    N9K-
C9332D-GX2B
            e1b    cs2(FDOXXXXXXXX)         Ethernet1/16/1    N9K-
C9332D-GX2B
            .
            .
            .
            e7a    cs1(FLMXXXXXXXX)         Ethernet1/16/2    N9K-
C9332D-GX2B
            e7b    cs2(FDOXXXXXXXX)         Ethernet1/16/2    N9K-
C9332D-GX2B

node1-01/lldp
            e10a   cs1 (c8:60:8f:xx:xx:xx)  Ethernet1/16/3    -
            e10b   cs2 (04:e3:87:xx:xx:xx)  Ethernet1/16/3    -
            e11a   cs1 (c8:60:8f:xx:xx:xx)  Ethernet1/16/4    -
            e11b   cs2 (04:e3:87:xx:xx:xx)  Ethernet1/16/4    -
            e1a    cs1 (c8:60:8f:xx:xx:xx)  Ethernet1/16/1    -
            e1b    cs2 (04:e3:87:xx:xx:xx)  Ethernet1/16/1    -
            .
            .
            .
            e7a    cs1 (c8:60:8f:34:78:d3)  Ethernet1/16/2    -
            e7b    cs2 (04:e3:87:19:a2:59)  Ethernet1/16/2    -
.
.
.
```

4. Check the administrative and operational status of each port.
    a. **Cluster ports**
        i. Verify that all the cluster ports are up with a healthy status:

```
network port show -ipspace Cluster
```

Show example

```
cluster1::*> network port show -ipspace Cluster

Node: node1-01

Ignore
                                                  Speed(Mbps)
Health   Health
Port      IPspace      Broadcast Domain Link MTU  Admin/Oper
Status   Status
--------- ------------ ---------------- ---- ---- -----------
-------- ------
e7a       Cluster      Cluster          up   9000  auto/100000
healthy false
e7b       Cluster      Cluster          up   9000  auto/100000
healthy false

Node: node1-02

Ignore
                                                  Speed(Mbps)
Health   Health
Port      IPspace      Broadcast Domain Link MTU  Admin/Oper
Status   Status
--------- ------------ ---------------- ---- ---- -----------
-------- ------
e7a       Cluster      Cluster          up   9000  auto/100000
healthy false
e7b       Cluster      Cluster          up   9000  auto/100000
healthy false

Node: node1-03


Ignore
                                                  Speed(Mbps)
Health   Health
Port      IPspace      Broadcast Domain Link MTU  Admin/Oper
Status   Status
--------- ------------ ---------------- ---- ---- -----------
-------- ------
e7a       Cluster      Cluster          up   9000  auto/10000
healthy  false
e7b       Cluster      Cluster          up   9000  auto/10000
healthy  false
```

```
Node: node1-04

Ignore
                                                          Speed(Mbps)
Health   Health
Port      IPspace      Broadcast Domain Link MTU  Admin/Oper
Status   Status
--------- ------------ ---------------- ---- ---- -----------
-------- ------
e7a       Cluster      Cluster          up   9000  auto/10000
healthy  false
e7b       Cluster      Cluster          up   9000  auto/10000
healthy  false
```

ii. Verify that all the cluster interfaces (LIFs) are on the home port:

```
network interface show -role cluster
```

Show example

```
cluster1::*> network interface show -role cluster

            Logical         Status     Network
Current   Current Is
Vserver     Interface       Admin/Oper Address/Mask       Node
Port    Home
----------- --------------- ---------- ------------------
--------- ------- ----
Cluster
            node1-01_clus1  up/up      169.254.36.44/16
node1-01  e7a     true
            node1-01_clus2  up/up      169.254.7.5/16
node1-01  e7b     true
            node1-02_clus1  up/up      169.254.197.206/16
node1-02  e7a     true
            node1-02_clus2  up/up      169.254.195.186/16
node1-02  e7b     true
            node1-03_clus1  up/up      169.254.192.49/16
node1-03  e7a     true
            node1-03_clus2  up/up      169.254.182.76/16
node1-03  e7b     true
            node1-04_clus1  up/up      169.254.59.49/16
node1-04  e7a     true
            node1-04_clus2  up/up      169.254.62.244/16
node1-04  e7b     true

8 entries were displayed.
```

iii. Verify that the cluster displays information for both cluster switches:

```
system cluster-switch show -is-monitoring-enabled-operational true
```

Show example

```
cluster1::*> system cluster-switch show -is-monitoring-enabled
-operational true

Switch                      Type               Address
Model
--------------------------- ------------------
---------------- ---------------
cs2(FDOXXXXXXXX)            cluster-network    10.228.137.233
N9K-C9332D-GX2B
     Serial Number: FDOXXXXXXXX
      Is Monitored: true
            Reason: None
  Software Version: Cisco Nexus Operating System (NX-OS)
Software, Version
                    10.4(2)
    Version Source: CDP/ISDP


cs1(FLMXXXXXXXX)             cluster-network   10.228.137.253
N9K-C9332D-GX2B
     Serial Number: FLMXXXXXXXX
      Is Monitored: true
            Reason: None
  Software Version: Cisco Nexus Operating System (NX-OS)
Software, Version
                    10.4(2)
    Version Source: CDP/ISDP

2 entries were displayed.
```

b. **HA ports**

i. Verify that all the HA ports are up with a healthy status:

```
ha interconnect status show -node <node-name>
```

Show example

```
cluster1::*> ha interconnect status show -node node1-01
  (system ha interconnect status show)

                        Node: node1-01
                Link 0 Status: up
                Link 1 Status: up
            Is Link 0 Active: true
            Is Link 1 Active: true
          IC RDMA Connection: up
                        Slot: 0
               Debug Firmware: no


Interconnect Port 0 :
                   Port Name: e1a-17
                         MTU: 4096
             Link Information: ACTIVE


Interconnect Port 1 :
                   Port Name: e1b-18
                         MTU: 4096
             Link Information: ACTIVE

cluster1::*> ha interconnect status show -node node1-02
  (system ha interconnect status show)

                        Node: node1-02
                Link 0 Status: up
                Link 1 Status: up
            Is Link 0 Active: true
            Is Link 1 Active: true
          IC RDMA Connection: up
                        Slot: 0
               Debug Firmware: no


Interconnect Port 0 :
                   Port Name: e1a-17
                         MTU: 4096
             Link Information: ACTIVE


Interconnect Port 1 :
```

```
                  Port Name: e1b-18
                        MTU: 4096
           Link Information: ACTIVE
.
.
.
```

c. **Storage ports**

i. Verify that all the storage ports are up with a healthy status:

```
storage port show -port-type ENET
```

Show example

```
cluster1::*> storage port show -port-type ENET


                                     Speed
Node                Port Type  Mode    (Gb/s) State    Status
------------------ ---- ----- ------- ------ --------
-----------
node1-01
                    e10a ENET  -          100 enabled  online
                    e10b ENET  -          100 enabled  online
                    e11a ENET  -          100 enabled  online
                    e11b ENET  -          100 enabled  online
node1-02
                    e10a ENET  -          100 enabled  online
                    e10b ENET  -          100 enabled  online
                    e11a ENET  -          100 enabled  online
                    e11b ENET  -          100 enabled  online
node1-03
                    e10a ENET  -          100 enabled  online
                    e10b ENET  -          100 enabled  online
                    e11a ENET  -          100 enabled  online
node1-04
                    e10a ENET  -          100 enabled  online
                    e10b ENET  -          100 enabled  online
                    e11a ENET  -          100 enabled  online
                    e11b ENET  -          100 enabled  online
16 entries were displayed.
```

d. **Storage shelf ports**

i. Verify that all the storage shelf ports are up with a healthy status:

```
storage shelf port show
```

Show example

```
cluster1::*> storage shelf port show

Shelf ID Module State        Internal?
-------- -- ------ ---------- ---------
1.1
         0 A      connected    false
         1 A      connected    false
         2 A      connected    false
         3 A      connected    false
         4 A      connected    false
         5 A      connected    false
         6 A      connected    false
         7 A      connected    false
         8 B      connected    false
         9 B      connected    false
        10 B      connected    false
        11 B      connected    false
        12 B      connected    false
        13 B      connected    false
        14 B      connected    false
        15 B      connected    false

16 entries were displayed.
```

ii. Verify the connection status of all the storage shelf ports:

```
storage shelf port show -fields remote-device,remote-
port,connector-state
```

Show example

```
cluster1::*> storage shelf port show -fields remote-
device,remote-port,connector-state

shelf id connector-state remote-port    remote-device
----- -- -------------- -------------- -----------------
1.1   0  connected       Ethernet1/17/1 CX9332D-cs1
1.1   1  connected       Ethernet1/15/1 CX9364D-cs1
1.1   2  connected       Ethernet1/17/2 CX9332D-cs1
1.1   3  connected       Ethernet1/15/2 CX9364D-cs1
1.1   4  connected       Ethernet1/17/3 CX9332D-cs1
1.1   5  connected       Ethernet1/15/3 CX9364D-cs1
1.1   6  connected       Ethernet1/17/4 CX9332D-cs1
1.1   7  connected       Ethernet1/15/4 CX9364D-cs1
1.1   8  connected       Ethernet1/19/1 CX9332D-cs1
1.1   9  connected       Ethernet1/17/1 CX9364D-cs1
1.1   10 connected       Ethernet1/19/2 CX9332D-cs1
1.1   11 connected       Ethernet1/17/2 CX9364D-cs1
1.1   12 connected       Ethernet1/19/3 CX9332D-cs1
1.1   13 connected       Ethernet1/17/3 CX9364D-cs1
1.1   14 connected       Ethernet1/19/4 CX9332D-cs1
1.1   15 connected       Ethernet1/17/4 CX9364D-cs1

16 entries were displayed.
```

5. Disable auto-revert on the cluster LIFs. The cluster LIFs fail over to the partner cluster switch and remain there as you perform the upgrade procedure on the targeted switch:

```
network interface modify -vserver Cluster -lif * -auto-revert false
```

6. Copy the NX-OS software and EPLD images to the Nexus 9332D-GX2B switch.

Show example

```
cs2# copy sftp: bootflash: vrf management
Enter source filename: /code/nxos.10.4.2.bin
Enter hostname for the sftp server: 172.19.2.1
Enter username: root

Outbound-ReKey for 172.19.2.1:22
Inbound-ReKey for 172.19.2.1:22
root@172.19.2.1's password:
sftp> progress
Progress meter enabled
sftp> get   /code/nxos.10.4.2.bin  /bootflash/nxos.10.4.2.bin
/code/nxos.10.4.2.bin  100% 1261MB   9.3MB/s   02:15
sftp> exit
Copy complete, now saving to disk (please wait)...
Copy complete.

cs2# copy sftp: bootflash: vrf management
Enter source filename: /code/n9000-epld.10.4.2.F.img
Enter hostname for the sftp server: 172.19.2.1
Enter username: user1

Outbound-ReKey for 172.19.2.1:22
Inbound-ReKey for 172.19.2.1:22
user1@172.19.2.1's password:
sftp> progress
Progress meter enabled
sftp> get   /code/n9000-epld.10.4.2.F.img  /bootflash/n9000-
epld.10.4.2.F.img
/code/n9000-epld.10.4.2.F.img  100%  161MB   9.5MB/s   00:16
sftp> exit
Copy complete, now saving to disk (please wait)...
Copy complete.
```

7. Verify the running version of the NX-OS software:

   ```
   show version
   ```

Show example

```
cs2# show version
Cisco Nexus Operating System (NX-OS) Software
TAC support: http://www.cisco.com/tac
Copyright (C) 2002-2025, Cisco and/or its affiliates.
All rights reserved.
The copyrights to certain works contained in this software are
owned by other third parties and used and distributed under their
own
licenses, such as open source.  This software is provided "as is,"
and unless
otherwise stated, there is no warranty, express or implied,
including but not
limited to warranties of merchantability and fitness for a
particular purpose.
Certain components of this software are licensed under
the GNU General Public License (GPL) version 2.0 or
GNU General Public License (GPL) version 3.0  or the GNU
Lesser General Public License (LGPL) Version 2.1 or
Lesser General Public License (LGPL) Version 2.0.
A copy of each such license is available at
http://www.opensource.org/licenses/gpl-2.0.php and
http://opensource.org/licenses/gpl-3.0.html and
http://www.opensource.org/licenses/lgpl-2.1.php and
http://www.gnu.org/licenses/old-licenses/library.txt.


Software
  BIOS: version 01.14
  NXOS: version 10.4(1) [Feature Release]
  Host NXOS: version 10.4(1)
  BIOS compile time:  11/25/2024
  NXOS image file is: bootflash:///nxos64-cs.10.4.1.F.bin
  NXOS compile time:  11/30/2023 12:00:00 [12/14/2023 05:25:50]
  NXOS boot mode: LXC


Hardware
  cisco Nexus9000 C9332D-GX2B Chassis
  Intel(R) Xeon(R) CPU D-1633N @ 2.50GHz with 32802156 kB of memory.
  Processor Board ID FLMXXXXXXXX
  Device name: cs2
  bootflash:  115802886 kB
```

```
Kernel uptime is 5 day(s), 2 hour(s), 13 minute(s), 21 second(s)


Last reset at 3580 usecs after Thu Jun  5 15:55:08 2025
  Reason: Reset Requested by CLI command reload
  System version: 10.4(1)
  Service:


plugin
  Core Plugin, Ethernet Plugin


Active Package(s):

cs2#
```

8. Install the NX-OS image.

   Installing the image file causes it to be loaded every time the switch is rebooted.

Show example

```
cs2# install all nxos bootflash:nxos.10.4.2.bin

Installer will perform compatibility check first. Please wait.
Installer is forced disruptive

Verifying image bootflash:/nxos.10.4.2.bin for boot variable "nxos".
[] 100% -- SUCCESS

Verifying image type.
[] 100% -- SUCCESS

Preparing "nxos" version info using image
bootflash:/nxos.10.4.2.bin.
[] 100% -- SUCCESS

Preparing "bios" version info using image
bootflash:/nxos.10.4.2.bin.
[] 100% -- SUCCESS

Performing module support checks.
[] 100% -- SUCCESS

Notifying services about system upgrade.
[] 100% -- SUCCESS


Compatibility check is done:
Module  Bootable  Impact          Install-type  Reason
------  --------  --------------- ------------  ---------
  1     yes       Disruptive      Reset         Default upgrade is
not hitless



Images will be upgraded according to following table:

Module   Image    Running-Version(pri:alt)                 New-
Version         Upg-Required
-------  --------- ----------------------------------------
------------------- ------------
  1      nxos     10.4(1)                                  10.4(2)
Yes
  1      bios     xx.xx.:xx.xx                             xxx
No
```

```
Switch will be reloaded for disruptive upgrade.

Do you want to continue with the installation (y/n)? [n] y

Install is in progress, please wait.

Performing runtime checks.
[] 100% -- SUCCESS

Setting boot variables.
[] 100% -- SUCCESS

Performing configuration copy.
[] 100% -- SUCCESS

Module 1: Refreshing compact flash and upgrading
bios/loader/bootrom.
Warning: please do not remove or power off the module at this time.
[] 100% -- SUCCESS

Finishing the upgrade, switch will reboot in 10 seconds.
```

9. Verify the new version of NX-OS software after the switch has rebooted:

   ```
   show version
   ```

Show example

```
cs2# show version
Cisco Nexus Operating System (NX-OS) Software
TAC support: http://www.cisco.com/tac
Copyright (C) 2002-2025, Cisco and/or its affiliates.
All rights reserved.
The copyrights to certain works contained in this software are
owned by other third parties and used and distributed under their
own
licenses, such as open source.  This software is provided "as is,"
and unless
otherwise stated, there is no warranty, express or implied,
including but not
limited to warranties of merchantability and fitness for a
particular purpose.
Certain components of this software are licensed under
the GNU General Public License (GPL) version 2.0 or
GNU General Public License (GPL) version 3.0  or the GNU
Lesser General Public License (LGPL) Version 2.1 or
Lesser General Public License (LGPL) Version 2.0.
A copy of each such license is available at
http://www.opensource.org/licenses/gpl-2.0.php and
http://opensource.org/licenses/gpl-3.0.html and
http://www.opensource.org/licenses/lgpl-2.1.php and
http://www.gnu.org/licenses/old-licenses/library.txt.


Software
  BIOS: version 01.14
  NXOS: version 10.4(2) [Feature Release]
  Host NXOS: version 10.4(2)
  BIOS compile time:  11/25/2024
  NXOS image file is: bootflash:///nxos64-cs.10.4.2.F.bin
  NXOS compile time:  11/30/2023 12:00:00 [12/14/2023 05:25:50]
  NXOS boot mode: LXC


Hardware
  cisco Nexus9000 C9332D-GX2B Chassis
  Intel(R) Xeon(R) CPU D-1633N @ 2.50GHz with 32802156 kB of memory.
  Processor Board ID FLMXXXXXXXX
  Device name: cs2
  bootflash:  115802886 kB
```

```
Kernel uptime is 5 day(s), 2 hour(s), 13 minute(s), 21 second(s)


Last reset at 3580 usecs after Thu Jun  5 15:55:08 2025
  Reason: Reset Requested by CLI command reload
  System version: 10.4(2)
  Service:


plugin
  Core Plugin, Ethernet Plugin


Active Package(s):

cs2#
```

10. Upgrade the EPLD image and reboot the switch.

Show example

```
cs2# show version module 1 epld

EPLD Device                          Version
---------------------------------------
MI   FPGA                             0x7
IO   FPGA                             0x17
MI   FPGA2                            0x2
GEM  FPGA                             0x2
GEM  FPGA                             0x2
GEM  FPGA                             0x2
GEM  FPGA                             0x2

cs2# install epld bootflash:n9000-epld.10.4.2.F.img module all
Compatibility check:
Module        Type         Upgradable        Impact    Reason
------  ------------------ ----------------- --------- -----------
     1         SUP         Yes       disruptive  Module Upgradable

Retrieving EPLD versions.... Please wait.
Images will be upgraded according to following table:
Module  Type   EPLD              Running-Version   New-Version  Upg-
Required
------- ------ ----------------- ----------------- ------------
------------
     1  SUP    MI FPGA           0x07              0x07         No
     1  SUP    IO FPGA           0x17              0x19         Yes
     1  SUP    MI FPGA2          0x02              0x02         No
The above modules require upgrade.
The switch will be reloaded at the end of the upgrade
Do you want to continue (y/n) ?  [n] y

Proceeding to upgrade Modules.

Starting Module 1 EPLD Upgrade

Module 1 : IO FPGA [Programming] : 100.00% (     64 of      64
sectors)
Module 1 EPLD upgrade is successful.
Module   Type  Upgrade-Result
-------- ----- --------------
     1   SUP   Success

EPLDs upgraded.

Module 1 EPLD upgrade is successful.
```

11. After the switch reboot, log in again and verify that the new version of EPLD loaded successfully.

Show example

```
cs2# show version module 1 epld

EPLD Device                          Version
--------------------------------------
MI   FPGA                             0x7
IO   FPGA                             0x19
MI   FPGA2                            0x2
GEM  FPGA                             0x2
GEM  FPGA                             0x2
GEM  FPGA                             0x2
GEM  FPGA                             0x2
```

12. Verify the health of all the ports on the cluster.
    a. **Cluster ports**
        i. Verify that cluster ports are up and healthy across all nodes in the cluster:

```
network port show -ipspace Cluster
```

Show example

```
cluster1::*> network port show -ipspace Cluster

Node: node1-01

Ignore
                                                  Speed(Mbps)
Health   Health
Port      IPspace      Broadcast Domain Link MTU  Admin/Oper
Status   Status
--------- ------------ ---------------- ---- ---- -----------
-------- ------
e7a       Cluster      Cluster          up   9000  auto/10000
healthy  false
e7b       Cluster      Cluster          up   9000  auto/10000
healthy  false

Node: node1-02

Ignore
                                                  Speed(Mbps)
Health   Health
Port      IPspace      Broadcast Domain Link MTU  Admin/Oper
Status   Status
--------- ------------ ---------------- ---- ---- -----------
-------- ------
e7a       Cluster      Cluster          up   9000  auto/10000
healthy  false
e7b       Cluster      Cluster          up   9000  auto/10000
healthy  false

Node: node1-03

Ignore
                                                  Speed(Mbps)
Health   Health
Port      IPspace      Broadcast Domain Link MTU  Admin/Oper
Status   Status
--------- ------------ ---------------- ---- ---- -----------
-------- ------
e7a       Cluster      Cluster          up   9000  auto/100000
healthy false
e7b       Cluster      Cluster          up   9000  auto/100000
healthy false
```

```
Node: node1-04

Ignore
                                                          Speed(Mbps)
Health   Health
Port      IPspace      Broadcast Domain Link MTU  Admin/Oper
Status   Status
--------- ------------ ---------------- ---- ---- -----------
-------- ------
e7a       Cluster      Cluster          up   9000  auto/100000
healthy false
e7b       Cluster      Cluster          up   9000  auto/100000
healthy false
```

ii. Verify the switch health from the cluster:

```
network device-discovery show -protocol cdp
```

```
system cluster-switch show -is-monitoring-enabled-operational true
```

Show example

```
cluster1::*> network device-discovery show -protocol cdp

node1-02/cdp
            e10a   cs1(FLMXXXXXXXX)         Ethernet1/16/3
N9K-C9332D-GX2B
            e10b   cs2(FDOXXXXXXXX)         Ethernet1/16/3
N9K-C9332D-GX2B
            e11a   cs1(FLMXXXXXXXX)         Ethernet1/16/4
N9K-C9332D-GX2B
            e11b   cs2(FDOXXXXXXXX)         Ethernet1/16/4
N9K-C9332D-GX2B
            e1a    cs1(FLMXXXXXXXX)         Ethernet1/16/1
N9K-C9332D-GX2B
            e1b    cs2(FDOXXXXXXXX)         Ethernet1/16/1
N9K-C9332D-GX2B
            .
            .
            .
            e7a    cs1(FLM284504N6)         Ethernet1/16/2
N9K-C9332D-GX2B
            e7b    cs2(FDO2846056X)         Ethernet1/16/2
N9K-C9332D-GX2B

node1-01/cdp
            e10a   cs1(FLMXXXXXXXX)         Ethernet1/16/3
N9K-C9332D-GX2B
            e10b   cs2(FDOXXXXXXXX)         Ethernet1/16/3
N9K-C9332D-GX2B
            e11a   cs1(FLMXXXXXXXX)         Ethernet1/16/4
N9K-C9332D-GX2B
            e11b   cs2(FDOXXXXXXXX)         Ethernet1/16/4
N9K-C9332D-GX2B
            e1a    cs1(FLMXXXXXXXX)         Ethernet1/16/1
N9K-C9332D-GX2B
            e1b    cs2(FDOXXXXXXXX)         Ethernet1/16/1
N9K-C9332D-GX2B
           .
           .
           .
            e7a    cs1(FLMXXXXXXXX)         Ethernet1/16/2
N9K-C9332D-GX2B
            e7b    cs2(FDOXXXXXXXX)         Ethernet1/16/2
N9K-C9332D-GX2B
.
```

```
.
.

cluster1::*> system cluster-switch show -is-monitoring-enabled
-operational true
Switch                      Type               Address
Model
--------------------------- ------------------
--------------- ---------------
cs2(FDOXXXXXXXX)            cluster-network    10.228.137.233
N9K-C9332D-GX2B
     Serial Number: FDOXXXXXXXX
      Is Monitored: true
            Reason: None
  Software Version: Cisco Nexus Operating System (NX-OS)
Software, Version
                    10.4(2)
    Version Source: CDP/ISDP


cs1(FLMXXXXXXXX)             cluster-network   10.228.137.253
N9K-C9332D-GX2B
     Serial Number: FLMXXXXXXXX
      Is Monitored: true
            Reason: None
  Software Version: Cisco Nexus Operating System (NX-OS)
Software, Version
                    10.4(2)
    Version Source: CDP/ISDP
```

b. **HA ports**

i. Verify that all the HA ports are up with a healthy status:

```
ha interconnect status show -node <node-name>
```

Show example

```
cluster1::*> ha interconnect status show -node node1-01
  (system ha interconnect status show)

                        Node: node1-01
                Link 0 Status: up
                Link 1 Status: up
            Is Link 0 Active: true
            Is Link 1 Active: true
          IC RDMA Connection: up
                        Slot: 0
               Debug Firmware: no


Interconnect Port 0 :
                   Port Name: e1a-17
                         MTU: 4096
             Link Information: ACTIVE


Interconnect Port 1 :
                   Port Name: e1b-18
                         MTU: 4096
             Link Information: ACTIVE

cluster1::*> ha interconnect status show -node node1-02
  (system ha interconnect status show)

                        Node: node1-02
                Link 0 Status: up
                Link 1 Status: up
            Is Link 0 Active: true
            Is Link 1 Active: true
          IC RDMA Connection: up
                        Slot: 0
               Debug Firmware: no


Interconnect Port 0 :
                   Port Name: e1a-17
                         MTU: 4096
             Link Information: ACTIVE


Interconnect Port 1 :
```

```
                  Port Name: e1b-18
                        MTU: 4096
           Link Information: ACTIVE
.
.
.
```

c. **Storage ports**

i. Verify that all the storage ports are up with a healthy status:

```
storage port show -port-type ENET
```

Show example

```
cluster1::*> storage port show -port-type ENET


                                     Speed
Node                Port Type  Mode    (Gb/s) State    Status
------------------ ---- ----- ------- ------ --------
-----------
node1-01
                    e10a ENET  -          100 enabled  online
                    e10b ENET  -          100 enabled  online
                    e11a ENET  -          100 enabled  online
                    e11b ENET  -          100 enabled  online
node1-02
                    e10a ENET  -          100 enabled  online
                    e10b ENET  -          100 enabled  online
                    e11a ENET  -          100 enabled  online
                    e11b ENET  -          100 enabled  online
node1-03
                    e10a ENET  -          100 enabled  online
                    e10b ENET  -          100 enabled  online
                    e11a ENET  -          100 enabled  online
node1-04
                    e10a ENET  -          100 enabled  online
                    e10b ENET  -          100 enabled  online
                    e11a ENET  -          100 enabled  online
                    e11b ENET  -          100 enabled  online
16 entries were displayed.
```

d. **Storage shelf ports**

i. Verify that all the storage shelf ports are up with a healthy status:

```
storage shelf port show
```

Show example

```
cluster1::*> storage shelf port show

Shelf ID Module State        Internal?
-------- -- ------ ---------- ---------
1.1
         0 A      connected    false
         1 A      connected    false
         2 A      connected    false
         3 A      connected    false
         4 A      connected    false
         5 A      connected    false
         6 A      connected    false
         7 A      connected    false
         8 B      connected    false
         9 B      connected    false
        10 B      connected    false
        11 B      connected    false
        12 B      connected    false
        13 B      connected    false
        14 B      connected    false
        15 B      connected    false

16 entries were displayed.
```

ii. Verify the connection status of all the storage shelf ports:

```
storage shelf port show -fields remote-device,remote-
port,connector-state
```

Show example

```
cluster1::*> storage shelf port show -fields remote-
device,remote-port,connector-state

shelf id connector-state remote-port    remote-device
----- -- -------------- -------------- -----------------
1.1   0  connected       Ethernet1/17/1 CX9332D-cs1
1.1   1  connected       Ethernet1/15/1 CX9364D-cs1
1.1   2  connected       Ethernet1/17/2 CX9332D-cs1
1.1   3  connected       Ethernet1/15/2 CX9364D-cs1
1.1   4  connected       Ethernet1/17/3 CX9332D-cs1
1.1   5  connected       Ethernet1/15/3 CX9364D-cs1
1.1   6  connected       Ethernet1/17/4 CX9332D-cs1
1.1   7  connected       Ethernet1/15/4 CX9364D-cs1
1.1   8  connected       Ethernet1/19/1 CX9332D-cs1
1.1   9  connected       Ethernet1/17/1 CX9364D-cs1
1.1   10 connected       Ethernet1/19/2 CX9332D-cs1
1.1   11 connected       Ethernet1/17/2 CX9364D-cs1
1.1   12 connected       Ethernet1/19/3 CX9332D-cs1
1.1   13 connected       Ethernet1/17/3 CX9364D-cs1
1.1   14 connected       Ethernet1/19/4 CX9332D-cs1
1.1   15 connected       Ethernet1/17/4 CX9364D-cs1

16 entries were displayed.
```

13. Verify that the cluster is healthy:

    `cluster show`

    Show example

```
cluster1::*> cluster show


Node                 Health  Eligibility   Epsilon
-------------------- ------- ------------  ------------
node1-01             true    true          false
node1-02             true    true          false
node1-03             true    true          false
node1-04             true    true          true

4 entries were displayed.
```

14. Repeat steps 6 to 13 to install the NX-OS software and EPLD images on switch cs1.
15. Enable auto-revert on the cluster LIFs.

```
network interface modify -vserver Cluster -lif * -auto-revert true
```

16. Verify that the cluster LIFs have reverted to their home port:

```
network interface show -role cluster
```

Show example

```
cluster1::*> network interface show -role cluster

            Logical         Status     Network             Current
Current Is
Vserver     Interface       Admin/Oper Address/Mask        Node
Port    Home
----------- --------------- ---------- ------------------
----------- ------- ----
Cluster
            node1-01_clus1  up/up      169.254.36.44/16    node1-01
e7a     true
            node1-01_clus2  up/up      169.254.7.5/16      node1-01
e7b     true
            node1-02_clus1  up/up      169.254.197.206/16 node1-02
e7a     true
            node1-02_clus2  up/up      169.254.195.186/16 node1-02
e7b     true
            node1-03_clus1  up/up      169.254.192.49/16   node1-03
e7a     true
            node1-03_clus2  up/up      169.254.182.76/16   node1-03
e7b     true
            node1-04_clus1  up/up      169.254.59.49/16    node1-04
e7a     true
            node1-04_clus2  up/up      169.254.62.244/16   node1-04
e7b     true
```

If any cluster LIFs have not returned to their home ports, revert them manually from the local node:

```
network interface revert -vserver Cluster -lif <lif-name>
```

What's next?

After you've installed or upgraded the NX-OS software, you install or upgrade the Reference Configuration File (RCF).

Install or upgrade the RCF

Install or upgrade the Reference Configuration File (RCF) overview

You install the Reference Configuration File (RCF) after setting up the Nexus 9332D-GX2B switch for the first time. You upgrade your RCF version when you have an existing version of the RCF file installed on your switch.

See the Knowledge Base article How to clear configuration on a Cisco interconnect switch while retaining remote connectivity for further information when installing or upgrading your RCF.

Available RCF configuration

- **Cluster-HA-Storage AFX** - All ports are configured in 4x100GbE breakout mode that universally supports AFX node clusters, HA, storage ports, and NX224 storage shelf ports. 400GbE ISL between switches. (*Cluster-HA-Storage AFX RCF_vxx.x*).

For specific port and VLAN usage details, refer to the banner and important notes section in your RCF. See Cisco Ethernet Switches for more information.

Suggested documentation

- Cisco Ethernet Switches (NSS)

  Consult the switch compatibility table for the supported ONTAP and RCF versions on the NetApp Support Site. Note that there can be command dependencies between the command syntax in the RCF and the syntax found in specific versions of NX-OS.

- Cisco Nexus 9000 Series Switches

  Refer to the appropriate software and upgrade guides available on the Cisco website for complete documentation on the Cisco switch upgrade and downgrade procedures.

About the examples

The examples in this procedure use the following switch and node nomenclature:

- The names of the two Cisco switches are cs1 and cs2.
- The node names are node1-01, node1-02, node1-03, and node1-04.
- The cluster LIF names are node1-01_clus1, node1-01_clus2, node1-02_clus1, node1-02_clus2, node1-03_clus1, node1-03_clus2, node1-04_clus1, and node1-04_clus2.
- The `cluster1::*>` prompt indicates the name of the cluster.

See the Hardware Universe to verify the correct ports on your platform.

> The command outputs might vary depending on different releases of ONTAP.

Commands used

The procedure requires the use of both ONTAP commands and Cisco Nexus 9000 Series Switches commands; ONTAP commands are used unless otherwise indicated.

What's next?

After you've reviewed the install RCF or upgrade RCF procedure, you install the RCF or upgrade your RCF as required.

You install the Reference Configuration File (RCF) after setting up the Nexus 9332D-GX2B switch for the first time.

Before you begin

Verify the following installations and connections:

- A console connection to the switch. The console connection is optional if you have remote access to the switch.
- Switch cs1 and switch cs2 are powered up and the initial switch setup is complete (the Management IP address and SSH is setup).
- The desired NX-OS version has been installed.
- ISL connections between switches are connected.

Step 1: Install the RCF on the switches

1. Login to switch cs1 using SSH or by using a serial console.
2. Copy the RCF to the bootflash of switch cs1 using one of the following transfer protocols: FTP, TFTP, SFTP, or SCP.

   For more information on Cisco commands, see the appropriate guide in the Cisco Nexus 9000 Series NX-OS Command Reference guides.

   Show example

   This example shows TFTP being used to copy an RCF to the bootflash on switch cs1:

   ```
   cs1# copy tftp: bootflash: vrf management
   Enter source filename: NX9332D-GX2B-RCF-v10.0-Shared.txt
   Enter hostname for the tftp server: 172.22.201.50
   Trying to connect to tftp server......Connection to Server
   Established.
   TFTP get operation was successful
   Copy complete, now saving to disk (please wait)...
   ```

3. Apply the RCF previously downloaded to the bootflash.

   For more information on Cisco commands, see the appropriate guide in the Cisco Nexus 9000 Series NX-OS Command Reference guides.

   This example shows the RCF file `NX9332D-GX2B-RCF-v10.0-Shared.txt` being installed on switch cs1:

   ```
   cs1# copy NX9332D-GX2B-RCF-v10.0-Shared.txt running-config echo-commands
   ```

4. Examine the banner output from the `show banner motd` command. You must read and follow these

instructions to ensure the proper configuration and operation of the switch.

Show example

```
cs1# show banner motd

*****************************************************************
**********
* NetApp Reference Configuration File (RCF)
*
* Switch   : NX9332D-GX2B
* Filename : NX9332D-GX2B-RCF-v10.0-Shared.txt
* Date     : 05-09-2025
* Version  : v10.0
* Port Usage:
* Ports  1-30: 100GbE Intra-Cluster/HA/Storage Ports, int e1/{1-
30}/1-4
* Ports 31-32: Intra-Cluster ISL Ports, int e1/31-32
*
* IMPORTANT NOTES
* Interface port-channel999 is reserved to identify the version of
this file.
*****************************************************************
**********
```

5. Verify that the RCF file is the correct newer version:

   `show running-config`

   When you check the output to verify you have the correct RCF, make sure that the following information is correct:

   - The RCF banner
   - The node and port settings
   - Customizations

     The output varies according to your site configuration. Check the port settings and refer to the release notes for any changes specific to the RCF that you have installed.

6. Save basic configuration details to the `write_erase.cfg` file on the bootflash.

Make sure to configure the following:

- Username and password
- Management IP address
- Default gateway
- Switch name

```
cs1# show run | i "username admin password" > bootflash:write_erase.cfg

cs1# show run | section "vrf context management" >> bootflash:write_erase.cfg

cs1# show run | section "interface mgmt0" >> bootflash:write_erase.cfg

cs1# show run | section "switchname" >> bootflash:write_erase.cfg

cs1# echo "hardware access-list tcam region ing-racl 1024" >>
bootflash:write_erase.cfg

cs1# echo "hardware access-list tcam region egr-racl 1024" >>
bootflash:write_erase.cfg

cs1# echo "hardware access-list tcam region ing-l2-qos 1536" >>
bootflash:write_erase.cfg
```

See the Knowledge Base article How to clear configuration on a Cisco interconnect switch while retaining remote connectivity for further details.

7. Verify that the `write_erase.cfg` file is populated as expected:

   `show file bootflash:write_erase.cfg`

8. Issue the `write erase` command to erase the current saved configuration:

   ```
   cs1# write erase

   Warning: This command will erase the startup-configuration.

   Do you wish to proceed anyway? (y/n) [n] y
   ```

9. Copy the previously saved basic configuration into the startup configuration.

   ```
   cs1# copy bootflash:write_erase.cfg startup-config
   ```

10. Reboot the switch:

    ```
    cs1# reload

    This command will reboot the system. (y/n)? [n] y
    ```

11. Repeat steps 1 through 10 on switch cs2.

12. Connect the ports of all nodes in the ONTAP cluster to switches cs1 and cs2.

Step 2: Verify the switch connections

1. Verify that the switch ports connected to the cluster ports are up:

   `show interface brief`

   Show example

```
cs1# show interface brief | grep up
.
.
Eth1/9/3        1       eth  trunk  up      none
100G(D) --
Eth1/9/4        1       eth  trunk  up      none
100G(D) --
Eth1/15/1       1       eth  trunk  up      none
100G(D) --
Eth1/15/2       1       eth  trunk  up      none
100G(D) --
Eth1/15/3       1       eth  trunk  up      none
100G(D) --
Eth1/15/4       1       eth  trunk  up      none
100G(D) --
Eth1/16/1       1       eth  trunk  up      none
100G(D) --
Eth1/16/2       1       eth  trunk  up      none
100G(D) --
Eth1/16/3       1       eth  trunk  up      none
100G(D) --
Eth1/16/4       1       eth  trunk  up      none
100G(D) --
Eth1/17/1       1       eth  trunk  up      none
100G(D) --
Eth1/17/2       1       eth  trunk  up      none
100G(D) --
Eth1/17/3       1       eth  trunk  up      none
100G(D) --
Eth1/17/4       1       eth  trunk  up      none
100G(D) --
.
.
```

2. Verify that the cluster nodes are in their correct cluster VLANs using the following commands:

```
show vlan brief

show interface trunk
```

Show example

```
cs1# show vlan brief
VLAN Name                              Status    Ports
---- --------------------------------- ---------
-------------------------------
1    default                           active    Po1, Po999, Eth1/31,
Eth1/32
                                                 Eth1/33, Eth1/34,
Eth1/1/1
                                                 Eth1/1/2, Eth1/1/3,
Eth1/1/4
                                                 Eth1/2/1, Eth1/2/2,
Eth1/2/3
                                                 Eth1/2/4, Eth1/3/1,
Eth1/3/2
                                                 Eth1/3/3, Eth1/3/4,
Eth1/4/1
                                                 Eth1/4/2, Eth1/4/3,
Eth1/4/4
                                                 Eth1/5/1, Eth1/5/2,
Eth1/5/3
                                                 Eth1/5/4, Eth1/6/1,
Eth1/6/2
                                                 Eth1/6/3, Eth1/6/4,
Eth1/7/1
                                                 Eth1/7/2, Eth1/7/3,
Eth1/7/4
                                                 Eth1/8/1, Eth1/8/2,
Eth1/8/3
                                                 Eth1/8/4, Eth1/9/1,
Eth1/9/2
                                                 Eth1/9/3, Eth1/9/4,
Eth1/10/1
                                                 Eth1/10/2,
Eth1/10/3, Eth1/10/4
                                                 Eth1/11/1,
Eth1/11/2, Eth1/11/3
                                                 Eth1/11/4,
Eth1/12/1, Eth1/12/2
                                                 Eth1/12/3,
Eth1/12/4, Eth1/13/1
                                                 Eth1/13/2,
Eth1/13/3, Eth1/13/4
                                                 Eth1/14/1,
Eth1/14/2, Eth1/14/3
```

```
                                                    Eth1/14/4,
Eth1/15/1, Eth1/15/2
                                                    Eth1/15/3,
Eth1/15/4, Eth1/16/1
                                                    Eth1/16/2,
Eth1/16/3, Eth1/16/4
                                                    Eth1/17/1,
Eth1/17/2, Eth1/17/3
                                                    Eth1/17/4,
Eth1/18/1, Eth1/18/2
                                                    Eth1/18/3,
Eth1/18/4, Eth1/19/1
                                                    Eth1/19/2,
Eth1/19/3, Eth1/19/4
                                                    Eth1/20/1,
Eth1/20/2, Eth1/20/3
                                                    Eth1/20/4,
Eth1/21/1, Eth1/21/2
                                                    Eth1/21/3,
Eth1/21/4, Eth1/22/1
                                                    Eth1/22/2,
Eth1/22/3, Eth1/22/4
                                                    Eth1/23/1,
Eth1/23/2, Eth1/23/3
                                                    Eth1/23/4,
Eth1/24/1, Eth1/24/2
                                                    Eth1/24/3,
Eth1/24/4, Eth1/25/1
                                                    Eth1/25/2,
Eth1/25/3, Eth1/25/4
                                                    Eth1/26/1,
Eth1/26/2, Eth1/26/3
                                                    Eth1/26/4,
Eth1/27/1, Eth1/27/2
                                                    Eth1/27/3,
Eth1/27/4, Eth1/28/1
                                                    Eth1/28/2,
Eth1/28/3, Eth1/28/4
                                                    Eth1/29/1,
Eth1/29/2, Eth1/29/3
                                                    Eth1/29/4,
Eth1/30/1, Eth1/30/2
                                                    Eth1/30/3, Eth1/30/4
17   VLAN0017                         active    Eth1/1/1, Eth1/1/2,
Eth1/1/3
                                                    Eth1/1/4, Eth1/2/1,
```

```
Eth1/2/2
                                                    Eth1/2/3, Eth1/2/4,
Eth1/3/1
                                                    Eth1/3/2, Eth1/3/3,
Eth1/3/4
                                                    Eth1/4/1, Eth1/4/2,
Eth1/4/3
                                                    Eth1/4/4, Eth1/5/1,
Eth1/5/2
                                                    Eth1/5/3, Eth1/5/4,
Eth1/6/1
                                                    Eth1/6/2, Eth1/6/3,
Eth1/6/4
                                                    Eth1/7/1, Eth1/7/2,
Eth1/7/3
                                                    Eth1/7/4, Eth1/8/1,
Eth1/8/2
                                                    Eth1/8/3, Eth1/8/4,
Eth1/9/1
                                                    Eth1/9/2, Eth1/9/3,
Eth1/9/4
                                                    Eth1/10/1,
Eth1/10/2, Eth1/10/3
                                                    Eth1/10/4,
Eth1/11/1, Eth1/11/2
                                                    Eth1/11/3,
Eth1/11/4, Eth1/12/1
                                                    Eth1/12/2,
Eth1/12/3, Eth1/12/4
                                                    Eth1/13/1,
Eth1/13/2, Eth1/13/3
                                                    Eth1/13/4,
Eth1/14/1, Eth1/14/2
                                                    Eth1/14/3,
Eth1/14/4, Eth1/15/1
                                                    Eth1/15/2,
Eth1/15/3, Eth1/15/4
                                                    Eth1/16/1,
Eth1/16/2, Eth1/16/3
                                                    Eth1/16/4,
Eth1/17/1, Eth1/17/2
                                                    Eth1/17/3,
Eth1/17/4, Eth1/18/1
                                                    Eth1/18/2,
Eth1/18/3, Eth1/18/4
                                                    Eth1/19/1,
```

```
Eth1/19/2, Eth1/19/3
                                                    Eth1/19/4,
Eth1/20/1, Eth1/20/2
                                                    Eth1/20/3,
Eth1/20/4, Eth1/21/1
                                                    Eth1/21/2,
Eth1/21/3, Eth1/21/4
                                                    Eth1/22/1,
Eth1/22/2, Eth1/22/3
                                                    Eth1/22/4,
Eth1/23/1, Eth1/23/2
                                                    Eth1/23/3,
Eth1/23/4, Eth1/24/1
                                                    Eth1/24/2,
Eth1/24/3, Eth1/24/4
                                                    Eth1/25/1,
Eth1/25/2, Eth1/25/3
                                                    Eth1/25/4,
Eth1/26/1, Eth1/26/2
                                                    Eth1/26/3,
Eth1/26/4, Eth1/27/1
                                                    Eth1/27/2,
Eth1/27/3, Eth1/27/4
                                                    Eth1/28/1,
Eth1/28/2, Eth1/28/3
                                                    Eth1/28/4,
Eth1/29/1, Eth1/29/2
                                                    Eth1/29/3,
Eth1/29/4, Eth1/30/1
                                                    Eth1/30/2,
Eth1/30/3, Eth1/30/4
18   VLAN0018                          active    Eth1/1/1, Eth1/1/2,
Eth1/1/3
                                                    Eth1/1/4, Eth1/2/1,
Eth1/2/2
                                                    Eth1/2/3, Eth1/2/4,
Eth1/3/1
                                                    Eth1/3/2, Eth1/3/3,
Eth1/3/4
                                                    Eth1/4/1, Eth1/4/2,
Eth1/4/3
                                                    Eth1/4/4, Eth1/5/1,
Eth1/5/2
                                                    Eth1/5/3, Eth1/5/4,
Eth1/6/1
                                                    Eth1/6/2, Eth1/6/3,
```

```
Eth1/6/4
                                                    Eth1/7/1, Eth1/7/2,
Eth1/7/3
                                                    Eth1/7/4, Eth1/8/1,
Eth1/8/2
                                                    Eth1/8/3, Eth1/8/4,
Eth1/9/1
                                                    Eth1/9/2, Eth1/9/3,
Eth1/9/4
                                                    Eth1/10/1,
Eth1/10/2, Eth1/10/3
                                                    Eth1/10/4,
Eth1/11/1, Eth1/11/2
                                                    Eth1/11/3,
Eth1/11/4, Eth1/12/1
                                                    Eth1/12/2,
Eth1/12/3, Eth1/12/4
                                                    Eth1/13/1,
Eth1/13/2, Eth1/13/3
                                                    Eth1/13/4,
Eth1/14/1, Eth1/14/2
                                                    Eth1/14/3,
Eth1/14/4, Eth1/15/1
                                                    Eth1/15/2,
Eth1/15/3, Eth1/15/4
                                                    Eth1/16/1,
Eth1/16/2, Eth1/16/3
                                                    Eth1/16/4,
Eth1/17/1, Eth1/17/2
                                                    Eth1/17/3,
Eth1/17/4, Eth1/18/1
                                                    Eth1/18/2,
Eth1/18/3, Eth1/18/4
                                                    Eth1/19/1,
Eth1/19/2, Eth1/19/3
                                                    Eth1/19/4,
Eth1/20/1, Eth1/20/2
                                                    Eth1/20/3,
Eth1/20/4, Eth1/21/1
                                                    Eth1/21/2,
Eth1/21/3, Eth1/21/4
                                                    Eth1/22/1,
Eth1/22/2, Eth1/22/3
                                                    Eth1/22/4,
Eth1/23/1, Eth1/23/2
                                                    Eth1/23/3,
```

```
Eth1/23/4, Eth1/24/1
                                                    Eth1/24/2,
Eth1/24/3, Eth1/24/4
                                                    Eth1/25/1,
Eth1/25/2, Eth1/25/3
                                                    Eth1/25/4,
Eth1/26/1, Eth1/26/2
                                                    Eth1/26/3,
Eth1/26/4, Eth1/27/1
                                                    Eth1/27/2,
Eth1/27/3, Eth1/27/4
                                                    Eth1/28/1,
Eth1/28/2, Eth1/28/3
                                                    Eth1/28/4,
Eth1/29/1, Eth1/29/2
                                                    Eth1/29/3,
Eth1/29/4, Eth1/30/1
                                                    Eth1/30/2,
Eth1/30/3, Eth1/30/4
30   VLAN0030                           active    Eth1/1/1, Eth1/1/2,
Eth1/1/3
                                                    Eth1/1/4, Eth1/2/1,
Eth1/2/2
                                                    Eth1/2/3, Eth1/2/4,
Eth1/3/1
                                                    Eth1/3/2, Eth1/3/3,
Eth1/3/4
                                                    Eth1/4/1, Eth1/4/2,
Eth1/4/3
                                                    Eth1/4/4, Eth1/5/1,
Eth1/5/2
                                                    Eth1/5/3, Eth1/5/4,
Eth1/6/1
                                                    Eth1/6/2, Eth1/6/3,
Eth1/6/4
                                                    Eth1/7/1, Eth1/7/2,
Eth1/7/3
                                                    Eth1/7/4, Eth1/8/1,
Eth1/8/2
                                                    Eth1/8/3, Eth1/8/4,
Eth1/9/1
                                                    Eth1/9/2, Eth1/9/3,
Eth1/9/4
                                                    Eth1/10/1,
Eth1/10/2, Eth1/10/3
                                                    Eth1/10/4,
```

```
Eth1/11/1, Eth1/11/2
                                                    Eth1/11/3,
Eth1/11/4, Eth1/12/1
                                                    Eth1/12/2,
Eth1/12/3, Eth1/12/4
                                                    Eth1/13/1,
Eth1/13/2, Eth1/13/3
                                                    Eth1/13/4,
Eth1/14/1, Eth1/14/2
                                                    Eth1/14/3,
Eth1/14/4, Eth1/15/1
                                                    Eth1/15/2,
Eth1/15/3, Eth1/15/4
                                                    Eth1/16/1,
Eth1/16/2, Eth1/16/3
                                                    Eth1/16/4,
Eth1/17/1, Eth1/17/2
                                                    Eth1/17/3,
Eth1/17/4, Eth1/18/1
                                                    Eth1/18/2,
Eth1/18/3, Eth1/18/4
                                                    Eth1/19/1,
Eth1/19/2, Eth1/19/3
                                                    Eth1/19/4,
Eth1/20/1, Eth1/20/2
                                                    Eth1/20/3,
Eth1/20/4, Eth1/21/1
                                                    Eth1/21/2,
Eth1/21/3, Eth1/21/4
                                                    Eth1/22/1,
Eth1/22/2, Eth1/22/3
                                                    Eth1/22/4,
Eth1/23/1, Eth1/23/2
                                                    Eth1/23/3,
Eth1/23/4, Eth1/24/1
                                                    Eth1/24/2,
Eth1/24/3, Eth1/24/4
                                                    Eth1/25/1,
Eth1/25/2, Eth1/25/3
                                                    Eth1/25/4,
Eth1/26/1, Eth1/26/2
                                                    Eth1/26/3,
Eth1/26/4, Eth1/27/1
                                                    Eth1/27/2,
Eth1/27/3, Eth1/27/4
                                                    Eth1/28/1,
```

```
Eth1/28/2, Eth1/28/3
                                                    Eth1/28/4,
Eth1/29/1, Eth1/29/2
                                                    Eth1/29/3,
Eth1/29/4, Eth1/30/1
                                                    Eth1/30/2,
Eth1/30/3, Eth1/30/4
40   VLAN0040                           active    Eth1/1/1, Eth1/1/2,
Eth1/1/3
                                                    Eth1/1/4, Eth1/2/1,
Eth1/2/2
                                                    Eth1/2/3, Eth1/2/4,
Eth1/3/1
                                                    Eth1/3/2, Eth1/3/3,
Eth1/3/4
                                                    Eth1/4/1, Eth1/4/2,
Eth1/4/3
                                                    Eth1/4/4, Eth1/5/1,
Eth1/5/2
                                                    Eth1/5/3, Eth1/5/4,
Eth1/6/1
                                                    Eth1/6/2, Eth1/6/3,
Eth1/6/4
                                                    Eth1/7/1, Eth1/7/2,
Eth1/7/3
                                                    Eth1/7/4, Eth1/8/1,
Eth1/8/2
                                                    Eth1/8/3, Eth1/8/4,
Eth1/9/1
                                                    Eth1/9/2, Eth1/9/3,
Eth1/9/4
                                                    Eth1/10/1,
Eth1/10/2, Eth1/10/3
                                                    Eth1/10/4,
Eth1/11/1, Eth1/11/2
                                                    Eth1/11/3,
Eth1/11/4, Eth1/12/1
                                                    Eth1/12/2,
Eth1/12/3, Eth1/12/4
                                                    Eth1/13/1,
Eth1/13/2, Eth1/13/3
                                                    Eth1/13/4,
Eth1/14/1, Eth1/14/2
                                                    Eth1/14/3,
Eth1/14/4, Eth1/15/1
                                                    Eth1/15/2,
```

```
Eth1/15/3, Eth1/15/4
                                                    Eth1/16/1,
Eth1/16/2, Eth1/16/3
                                                    Eth1/16/4,
Eth1/17/1, Eth1/17/2
                                                    Eth1/17/3,
Eth1/17/4, Eth1/18/1
                                                    Eth1/18/2,
Eth1/18/3, Eth1/18/4
                                                    Eth1/19/1,
Eth1/19/2, Eth1/19/3
                                                    Eth1/19/4,
Eth1/20/1, Eth1/20/2
                                                    Eth1/20/3,
Eth1/20/4, Eth1/21/1
                                                    Eth1/21/2,
Eth1/21/3, Eth1/21/4
                                                    Eth1/22/1,
Eth1/22/2, Eth1/22/3
                                                    Eth1/22/4,
Eth1/23/1, Eth1/23/2
                                                    Eth1/23/3,
Eth1/23/4, Eth1/24/1
                                                    Eth1/24/2,
Eth1/24/3, Eth1/24/4
                                                    Eth1/25/1,
Eth1/25/2, Eth1/25/3
                                                    Eth1/25/4,
Eth1/26/1, Eth1/26/2
                                                    Eth1/26/3,
Eth1/26/4, Eth1/27/1
                                                    Eth1/27/2,
Eth1/27/3, Eth1/27/4
                                                    Eth1/28/1,
Eth1/28/2, Eth1/28/3
                                                    Eth1/28/4,
Eth1/29/1, Eth1/29/2
                                                    Eth1/29/3,
Eth1/29/4, Eth1/30/1
                                                    Eth1/30/2,
Eth1/30/3, Eth1/30/4

cs1# show interface trunk
--------------------------------------------------------------------------
------------
Port          Native  Status        Port
```

```
              Vlan                    Channel
------------------------------------------------------------------------------
------------
Eth1/1/1      1       trunking      --
Eth1/1/2      1       trunking      --
Eth1/1/3      1       trunking      --
Eth1/1/4      1       trunking      --
Eth1/2/1      1       trunking      --
Eth1/2/2      1       trunking      --
Eth1/2/3      1       trunking      --
Eth1/2/4      1       trunking      --
.
.
.
Eth1/30/1     none
Eth1/30/2     none
Eth1/30/3     none
Eth1/30/4     none
Eth1/31       none
Eth1/32       none
Po1           1
```

For specific port and VLAN usage details, refer to the banner and important notes section in your RCF.

3. Verify that the ISL between cs1 and cs2 is functional:

```
show port-channel summary
```

Show example

```
cs1# show port-channel summary
Flags:  D - Down        P - Up in port-channel (members)
        I - Individual  H - Hot-standby (LACP only)
        s - Suspended   r - Module-removed
        b - BFD Session Wait
        S - Switched    R - Routed
        U - Up (port-channel)
        p - Up in delay-lacp mode (member)
        M - Not in use. Min-links not met
--------------------------------------------------------------------------
------------
Group Port-       Type     Protocol  Member Ports
      Channel
--------------------------------------------------------------------------
------------
1     Po1(SU)     Eth      LACP      Eth1/31(P)   Eth1/32(P)
999   Po999(SD)   Eth      NONE      --
cs1#
```

Step 3: Set up your ONTAP cluster

NetApp recommends that you use System Manager to set up new clusters.

System Manager provides a simple and easy workflow for cluster set up and configuration including assigning a node management IP address, initializing the cluster, creating a local tier, configuring protocols and provisioning initial storage.

Go to Configure ONTAP on a new cluster with System Manager for setup instructions.

What's next?

After you've installed the RCF, you verify the SSH configuration.

Upgrade your Reference Configuration File (RCF)

You upgrade your RCF version when you have an existing version of the RCF file installed on your operational switches.

Before you begin

Make sure you have the following:

- A current backup of the switch configuration.
- A fully functioning cluster (no errors in the logs or similar issues).
- The current RCF.
- If you are updating your RCF version, you need a boot configuration in the RCF that reflects the desired

boot images.

If you need to change the boot configuration to reflect the current boot images, you must do so before reapplying the RCF so that the correct version is instantiated on future reboots.

No operational inter-switch link (ISL) is needed during this procedure. This is by design because RCF version changes can affect ISL connectivity temporarily. To ensure non-disruptive cluster operations, the following procedure migrates all of the cluster LIFs to the operational partner switch while performing the steps on the target switch.

Before installing a new switch software version and RCFs, you must erase the switch settings and perform basic configuration. You must be connected to the switch using the serial console or have preserved basic configuration information prior to erasing the switch settings.

Step 1: Prepare for the upgrade

1. If AutoSupport is enabled on this cluster, suppress automatic case creation by invoking an AutoSupport message:

   ```
   system node autosupport invoke -node * -type all -message MAINT=xh
   ```

   where *x* is the duration of the maintenance window in hours.

2. Change the privilege level to advanced, entering **y** when prompted to continue:

   ```
   set -privilege advanced
   ```

   The advanced prompt (*>) appears.

3. Display the ports on each node that are connected to the switches:

   ```
   network device-discovery show
   ```

Show example

```
cluster1::*> network device-discovery show

Node/       Local  Discovered
Protocol    Port   Device (LLDP: ChassisID)  Interface
Platform
----------- ------ ------------------------- ----------------
----------------
node1-01/cdp
            e10a   cs1(FLMXXXXXXXX)          Ethernet1/16/3    N9K-
C9332D-GX2B
            e10b   cs2(FDOXXXXXXXX)          Ethernet1/16/3    N9K-
C9332D-GX2B
            e11a   cs1(FLMXXXXXXXX)          Ethernet1/16/4    N9K-
C9332D-GX2B
            e11b   cs2(FDOXXXXXXXX)          Ethernet1/16/4    N9K-
C9332D-GX2B
            e1a    cs1(FLMXXXXXXXX)          Ethernet1/16/1    N9K-
C9332D-GX2B
            e1b    cs2(FDOXXXXXXXX)          Ethernet1/16/1    N9K-
C9332D-GX2B
            .
            .
            .
            e7a    cs1(FLMXXXXXXXX)          Ethernet1/16/2    N9K-
C9332D-GX2B
            e7b    cs2(FDOXXXXXXXX)          Ethernet1/16/2    N9K-
C9332D-GX2B

node1-01/lldp
            e10a   cs1 (c8:60:8f:xx:xx:xx)   Ethernet1/16/3    -
            e10b   cs2 (04:e3:87:xx:xx:xx)   Ethernet1/16/3    -
            e11a   cs1 (c8:60:8f:xx:xx:xx)   Ethernet1/16/4    -
            e11b   cs2 (04:e3:87:xx:xx:xx)   Ethernet1/16/4    -
            e1a    cs1 (c8:60:8f:xx:xx:xx)   Ethernet1/16/1    -
            e1b    cs2 (04:e3:87:xx:xx:xx)   Ethernet1/16/1    -
            .
            .
            .
            e7a    cs1 (c8:60:8f:xx:xx:xx)   Ethernet1/16/2    -
            e7b    cs2 (04:e3:87:xx:xx:xx)   Ethernet1/16/2    -
```

4. Check the administrative and operational status of each port.

a. **Cluster ports**

   i. Verify that all the cluster ports are up with a healthy status:

```
network port show -ipspace Cluster
```

Show example

```
cluster1::*> network port show -ipspace Cluster

Node: node1-01

Ignore
                                                  Speed(Mbps)
Health   Health
Port      IPspace      Broadcast Domain Link MTU  Admin/Oper
Status   Status
--------- ------------ ---------------- ---- ---- -----------
-------- ------
e7a       Cluster      Cluster          up   9000  auto/100000
healthy false
e7b       Cluster      Cluster          up   9000  auto/100000
healthy false

Node: node1-02

Ignore
                                                  Speed(Mbps)
Health   Health
Port      IPspace      Broadcast Domain Link MTU  Admin/Oper
Status   Status
--------- ------------ ---------------- ---- ---- -----------
-------- ------
e7a       Cluster      Cluster          up   9000  auto/100000
healthy false
e7b       Cluster      Cluster          up   9000  auto/100000
healthy false

Node: node1-03


Ignore
                                                  Speed(Mbps)
Health   Health
Port      IPspace      Broadcast Domain Link MTU  Admin/Oper
Status   Status
--------- ------------ ---------------- ---- ---- -----------
-------- ------
e7a       Cluster      Cluster          up   9000  auto/10000
healthy  false
e7b       Cluster      Cluster          up   9000  auto/10000
healthy  false
```

```
Node: node1-04

Ignore
                                                            Speed(Mbps)
Health   Health
Port      IPspace      Broadcast Domain Link MTU  Admin/Oper
Status   Status
--------- ------------ ---------------- ---- ---- -----------
-------- ------
e7a       Cluster      Cluster          up   9000  auto/10000
healthy  false
e7b       Cluster      Cluster          up   9000  auto/10000
healthy  false
```

ii. Verify that all the cluster interfaces (LIFs) are on the home port:

```
network interface show -role cluster
```

Show example

```
cluster1::*> network interface show -role cluster
            Logical             Status     Network
Current      Current Is
Vserver     Interface           Admin/Oper Address/Mask
Node         Port    Home
----------- ------------------ ---------- -----------------
------------ ------- ----
Cluster
            node1-01_clus1      up/up      169.254.3.4/23
node1-01    e7a     true
            node1-01_clus2      up/up      169.254.3.5/23
node1-01    e7b     true
            node1-02_clus1      up/up      169.254.3.8/23
node1-02    e7a     true
            node1-02_clus2      up/up      169.254.3.9/23
node1-02    e7b     true
            node1-03_clus1      up/up      169.254.1.3/23
node1-03    e7a     true
            node1-03_clus2      up/up      169.254.1.1/23
node1-03    e7b     true
            node1-04_clus1      up/up      169.254.1.6/23
node1-04    e7a     true
            node1-04_clus2      up/up      169.254.1.7/23
node1-04    e7b     true
8 entries were displayed.
```

iii. Verify that the cluster displays information for both switches:

```
system cluster-switch show -is-monitoring-enabled-operational true
```

Show example

```
cluster1::*> system cluster-switch show -is-monitoring-enabled
-operational true

Switch                      Type               Address
Model
--------------------------- ------------------
--------------- --------------
cs2(FDOXXXXXXXX)            cluster-network    10.228.137.233
N9K-C9332D-GX2B
     Serial Number: FDOXXXXXXXX
      Is Monitored: true
            Reason: None
  Software Version: Cisco Nexus Operating System (NX-OS)
Software, Version
                    10.4(2)
    Version Source: CDP/ISDP


cs2(FLMXXXXXXXX)            cluster-network    10.228.137.234
N9K-C9332D-GX2B
     Serial Number: FLMXXXXXXXX
      Is Monitored: true
            Reason: None
  Software Version: Cisco Nexus Operating System (NX-OS)
Software, Version
                    10.4(2)
    Version Source: CDP/ISDP

2 entries were displayed.
```

b. **HA ports**

i. Verify that all the HA ports are up with a healthy status:

```
ha interconnect status show -node <node-name>
```

Show example

```
cluster1::*> ha interconnect status show -node node1-01
  (system ha interconnect status show)

                        Node: node1-01
              Link 0 Status: up
              Link 1 Status: up
           Is Link 0 Active: true
           Is Link 1 Active: true
         IC RDMA Connection: up
                        Slot: 0
             Debug Firmware: no


Interconnect Port 0 :
                   Port Name: e1a-17
                         MTU: 4096
           Link Information: ACTIVE


Interconnect Port 1 :
                   Port Name: e1b-18
                         MTU: 4096
           Link Information: ACTIVE

cluster1::*> ha interconnect status show -node node1-01
  (system ha interconnect status show)

                        Node: node1-01
              Link 0 Status: up
              Link 1 Status: up
           Is Link 0 Active: true
           Is Link 1 Active: true
         IC RDMA Connection: up
                        Slot: 0
             Debug Firmware: no


Interconnect Port 0 :
                   Port Name: e1a-17
                         MTU: 4096
           Link Information: ACTIVE


Interconnect Port 1 :
```

```
                  Port Name: e1b-18
                        MTU: 4096
           Link Information: ACTIVE
.
.
.
```

c. **Storage ports**

i. Verify that all the storage ports are up with a healthy status:

```
storage port show -port-type ENET
```

Show example

```
cluster1::*> storage port show -port-type ENET


                                     Speed
Node                Port Type  Mode    (Gb/s) State    Status
------------------ ---- ----- ------- ------ --------
-----------
node1-01
                    e10a ENET  -          100 enabled  online
                    e10b ENET  -          100 enabled  online
                    e11a ENET  -          100 enabled  online
                    e11b ENET  -          100 enabled  online
node1-02
                    e10a ENET  -          100 enabled  online
                    e10b ENET  -          100 enabled  online
                    e11a ENET  -          100 enabled  online
                    e11b ENET  -          100 enabled  online
node1-03
                    e10a ENET  -          100 enabled  online
                    e10b ENET  -          100 enabled  online
                    e11a ENET  -          100 enabled  online
node1-04
                    e10a ENET  -          100 enabled  online
                    e10b ENET  -          100 enabled  online
                    e11a ENET  -          100 enabled  online
                    e11b ENET  -          100 enabled  online
16 entries were displayed.
```

d. **Storage shelf ports**

i. Verify that all the storage shelf ports are up with a healthy status:

```
storage shelf port show
```

Show example

```
cluster1::*> storage shelf port show

Shelf ID Module State        Internal?
-------- -- ------ ---------- ---------
1.1
         0 A      connected    false
         1 A      connected    false
         2 A      connected    false
         3 A      connected    false
         4 A      connected    false
         5 A      connected    false
         6 A      connected    false
         7 A      connected    false
         8 B      connected    false
         9 B      connected    false
        10 B      connected    false
        11 B      connected    false
        12 B      connected    false
        13 B      connected    false
        14 B      connected    false
        15 B      connected    false

16 entries were displayed.
```

ii. Verify that all the storage shelf ports are up with a healthy status:

```
storage shelf port show -fields remote-device,remote-
port,connector-state
```

Show example

```
cluster1::*> storage shelf port show -fields remote-
device,remote-port,connector-state

shelf id connector-state remote-port    remote-device
----- -- -------------- -------------- -----------------
1.1   0  connected       Ethernet1/17/1 CX9332D-cs1
1.1   1  connected       Ethernet1/15/1 CX9364D-cs1
1.1   2  connected       Ethernet1/17/2 CX9332D-cs1
1.1   3  connected       Ethernet1/15/2 CX9364D-cs1
1.1   4  connected       Ethernet1/17/3 CX9332D-cs1
1.1   5  connected       Ethernet1/15/3 CX9364D-cs1
1.1   6  connected       Ethernet1/17/4 CX9332D-cs1
1.1   7  connected       Ethernet1/15/4 CX9364D-cs1
1.1   8  connected       Ethernet1/19/1 CX9332D-cs1
1.1   9  connected       Ethernet1/17/1 CX9364D-cs1
1.1   10 connected       Ethernet1/19/2 CX9332D-cs1
1.1   11 connected       Ethernet1/17/2 CX9364D-cs1
1.1   12 connected       Ethernet1/19/3 CX9332D-cs1
1.1   13 connected       Ethernet1/17/3 CX9364D-cs1
1.1   14 connected       Ethernet1/19/4 CX9332D-cs1
1.1   15 connected       Ethernet1/17/4 CX9364D-cs1

16 entries were displayed.
```

5. Disable auto-revert on the cluster LIFs.

   ```
   network interface modify -vserver Cluster -lif * -auto-revert false
   ```

Step 2: Configure ports

1. On switch cs1, shut down the ports connected to all the ports of the nodes.

```
cs1# config
cs1(config)# interface e1/1/1-4,e1/2/1-4,e1/3/1-4,e1/4/1-4,e1/5/1-
4,e1/6/1-4,e1/7/1-4,e1/8/1-4
cs1(config-if-range)# shutdown
cs1(config)# interface e1/9/1-4,e1/10/1-4,e1/11/1-4,e1/12/1-4,e1/13/1-
4,e1/14/1-4,e1/15/1-4,e1/16/1-4
cs1(config-if-range)# shutdown
cs1(config)# interface e1/17/1-4,e1/18/1-4,e1/19/1-4,e1/20/1-4,e1/21/1-
4,e1/22/1-44,e1/23/1-4
cs1(config-if-range)# shutdown
cs1(config)# interface e1/24/1-,e1/25/1-4,e1/26/1-4,e1/27/1-4,e1/28/1-
4,e1/29/1-4,e1/30/1-44
cs1(config-if-range)# shutdown
cs1(config-if-range)# exit
cs1(config)# exit
```

Make sure to shutdown **all** connected ports to avoid any network connection issues. See the Knowledge Base article Node out of quorum when migrating cluster LIF during switch OS upgrade for further details.

2. Verify that the cluster LIFs have failed over to the ports hosted on switch cs1. This might take a few seconds.

```
network interface show -role cluster
```

Show example

```
cluster1::*> network interface show -role cluster

            Logical         Status     Network            Current
Current Is
Vserver     Interface       Admin/Oper Address/Mask       Node
Port    Home
----------- --------------- ---------- ------------------
----------- ------- ----
Cluster
            node1-01_clus1  up/up      169.254.36.44/16   node1-01
e7a     true
            node1-01_clus2  up/up      169.254.7.5/16     node1-01
e7b     true
            node1-02_clus1  up/up      169.254.197.206/16 node1-02
e7a     true
            node1-02_clus2  up/up      169.254.195.186/16 node1-02
e7b     true
            node1-03_clus1  up/up      169.254.192.49/16  node1-03
e7a     true
            node1-03_clus2  up/up      169.254.182.76/16  node1-03
e7b     true
            node1-04_clus1  up/up      169.254.59.49/16   node1-04
e7a     true
            node1-04_clus2  up/up      169.254.62.244/16  node1-04
e7b     true

8 entries were displayed.
```

3. Verify that the cluster is healthy:

   `cluster show`

Show example

```
cluster1::*> cluster show
Node                 Health  Eligibility   Epsilon
-------------------- ------- ------------  -------
node1-01             true    true          false
node1-02             true    true          false
node1-03             true    true          true
node1-04             true    true          false

4 entries were displayed.
```

4. If you have not already done so, save a copy of the current switch configuration by copying the output of the following command to a text file:

   `show running-config`

   a. Record any custom additions between the current `running-config` and the RCF file in use (such as an SNMP configuration for your organization).

   b. For NX-OS 10.2 and later, use the `show diff running-config` command to compare with the saved RCF file in the bootflash. Otherwise, use a third part diff/compare tool.

5. Save basic configuration details to the `write_erase.cfg` file on the bootflash.

   Make sure to configure the following:

   - Username and password
   - Management IP address
   - Default gateway
   - Switch name

```
cs1# show run | i "username admin password" > bootflash:write_erase.cfg

cs1# show run | section "vrf context management" >> bootflash:write_erase.cfg

cs1# show run | section "interface mgmt0" >> bootflash:write_erase.cfg

cs1# show run | section "switchname" >> bootflash:write_erase.cfg

cs1# echo "hardware access-list tcam region ing-racl 1024" >>
bootflash:write_erase.cfg

cs1# echo "hardware access-list tcam region egr-racl 1024" >>
bootflash:write_erase.cfg

cs1# echo "hardware access-list tcam region ing-l2-qos 1536" >>
bootflash:write_erase.cfg
```

See the Knowledge Base article How to clear configuration on a Cisco interconnect switch while retaining remote connectivity for further details.

6. Verify that the `write_erase.cfg` file is populated as expected:

   `show file bootflash:write_erase.cfg`

7. Issue the `write erase` command to erase the current saved configuration:

   ```
   cs1# write erase

   Warning: This command will erase the startup-configuration.

   Do you wish to proceed anyway? (y/n) [n] y
   ```

8. Copy the previously saved basic configuration into the startup configuration.

   ```
   cs1# copy bootflash:write_erase.cfg startup-config
   ```

9. Reboot the switch:

   ```
   cs1# reload

   This command will reboot the system. (y/n)? [n] y
   ```

10. After the management IP address is reachable again, log in to the switch through SSH.

    You may need to update host file entries related to the SSH keys.

11. Copy the RCF to the bootflash of switch cs1 using one of the following transfer protocols: FTP, TFTP, SFTP, or SCP.

    For more information on Cisco commands, see the appropriate guide in the Cisco Nexus 9000 Series NX-OS Command Reference guides.

    Show example

    This example shows TFTP being used to copy an RCF to the bootflash on switch cs1:

    ```
    cs1# copy tftp: bootflash: vrf management
    Enter source filename: NX9332D-GX2B-RCF-v10.0-Shared.txt
    Enter hostname for the tftp server: 172.22.201.50
    Trying to connect to tftp server......Connection to Server
    Established.
    TFTP get operation was successful
    Copy complete, now saving to disk (please wait)...
    ```

12. Apply the RCF previously downloaded to the bootflash.

    For more information on Cisco commands, see the appropriate guide in the Cisco Nexus 9000 Series NX-

OS Command Reference guides.

This example shows the RCF file `NX9332D-GX2B-RCF-v10.0-Shared.txt` being installed on switch cs1:

```
cs1# copy NX9332D-GX2B-RCF-v10.0-Shared.txt running-config echo-commands
```

Make sure to thoroughly read the **Installation notes**, **Important Notes**, and **banner** sections of your RCF. You must read and follow these instructions to ensure the proper configuration and operation of the switch.

13. Verify that the RCF file is the correct newer version:

    `show running-config`

    When you check the output to verify you have the correct RCF, make sure that the following information is correct:

    - The RCF banner
    - The node and port settings
    - Customizations

      The output varies according to your site configuration. Check the port settings and refer to the release notes for any changes specific to the RCF that you have installed.

14. Reapply any previous customizations to the switch configuration.
15. After you verify the RCF versions, custom additions, and switch settings are correct, copy the `running-config` file to the `startup-config` file.

    For more information on Cisco commands, see the appropriate guide in the Cisco Nexus 9000 Series NX-OS Command Reference guides.

    ```
    cs1# copy running-config startup-config

    [] 100% Copy complete
    ```

16. Reboot switch cs1. You can ignore the “cluster switch health monitor” alerts and “cluster ports down” events reported on the nodes while the switch reboots.

    ```
    cs1# reload

    This command will reboot the system. (y/n)? [n] y
    ```

17. Verify the health of all the ports on the cluster.
    a. **Cluster ports**
        i. Verify that cluster ports are up and healthy across all nodes in the cluster:

        ```
        network port show -ipspace cluster
        ```

Show example

```
cluster1::*> network port show -ipspace Cluster

Node: node1

Ignore
                                                  Speed(Mbps)
Health   Health
Port      IPspace      Broadcast Domain Link MTU  Admin/Oper
Status   Status
--------- ------------ ---------------- ---- ---- -----------
-------- ------
e7a       Cluster      Cluster          up   9000  auto/10000
healthy  false
e7b       Cluster      Cluster          up   9000  auto/10000
healthy  false

Node: node1-02

Ignore
                                                  Speed(Mbps)
Health   Health
Port      IPspace      Broadcast Domain Link MTU  Admin/Oper
Status   Status
--------- ------------ ---------------- ---- ---- -----------
-------- ------
e7a       Cluster      Cluster          up   9000  auto/10000
healthy  false
e7b       Cluster      Cluster          up   9000  auto/10000
healthy  false

Node: node1-03

Ignore
                                                  Speed(Mbps)
Health   Health
Port      IPspace      Broadcast Domain Link MTU  Admin/Oper
Status   Status
--------- ------------ ---------------- ---- ---- -----------
-------- ------
e7a       Cluster      Cluster          up   9000  auto/100000
healthy false
e7b       Cluster      Cluster          up   9000  auto/100000
healthy false
```

```
Node: node1-04

Ignore
                                                          Speed(Mbps)
Health   Health
Port      IPspace      Broadcast Domain Link MTU  Admin/Oper
Status   Status
--------- ------------ ---------------- ---- ---- -----------
-------- ------
e7a       Cluster      Cluster          up   9000  auto/100000
healthy false
e7b       Cluster      Cluster          up   9000  auto/100000
healthy false
8 entries were displayed.
```

ii. Verify the switch health from the cluster.

```
network device-discovery show -protocol cdp
```

```
system cluster-switch show -is-monitoring-enabled-operational true
```

Show example

```
cluster1::*> network device-discovery show -protocol cdp

Node/       Local  Discovered
Protocol    Port   Device (LLDP: ChassisID)  Interface
Platform
----------- ------ ------------------------- ----------------
----------------
node1-01/cdp
            e10a   cs1(FLMXXXXXXXX)          Ethernet1/16/3
N9K-C9332D-GX2B
            e10b   cs2(FDOXXXXXXXX)          Ethernet1/16/3
N9K-C9332D-GX2B
            e11a   cs1(FLMXXXXXXXX)          Ethernet1/16/4
N9K-C9332D-GX2B
            e11b   cs2(FDOXXXXXXXX)          Ethernet1/16/4
N9K-C9332D-GX2B
            e1a    cs1(FLMXXXXXXXX)          Ethernet1/16/1
N9K-C9332D-GX2B
            e1b    cs2(FDOXXXXXXXX)          Ethernet1/16/1
N9K-C9332D-GX2B
            .
            .
            .
            e7a    cs1(FLMXXXXXXXX)          Ethernet1/16/2
N9K-C9332D-GX2B
            e7b    cs2(FDOXXXXXXXX)          Ethernet1/16/2
N9K-C9332D-GX2B


cluster1::*> system cluster-switch show -is-monitoring-enabled
-operational true

Switch                      Type               Address
Model
--------------------------- ------------------
--------------- ---------------
cs2(FDOXXXXXXXX)            cluster-network    10.228.137.233
N9K-C9332D-GX2B
     Serial Number: FDOXXXXXXXX
      Is Monitored: true
            Reason: None
  Software Version: Cisco Nexus Operating System (NX-OS)
Software, Version
                    10.4(2)
```

```
    Version Source: CDP/ISDP

cs1(FLMXXXXXXXX)            cluster-network    10.228.137.234
N9K-C9332D-GX2B
     Serial Number: FLMXXXXXXXX
      Is Monitored: true
            Reason: None
  Software Version: Cisco Nexus Operating System (NX-OS)
Software, Version
                    10.4(2)
    Version Source: CDP/ISDP

2 entries were displayed.
```

b. **HA ports**

i. Verify that all the HA ports are up with a healthy status:

```
ha interconnect status show -node <node-name>
```

Show example

```
cluster1::*> ha interconnect status show -node node1-01
  (system ha interconnect status show)

                        Node: node1-01
                Link 0 Status: up
                Link 1 Status: up
            Is Link 0 Active: true
            Is Link 1 Active: true
          IC RDMA Connection: up
                        Slot: 0
               Debug Firmware: no


Interconnect Port 0 :
                   Port Name: e1a-17
                         MTU: 4096
             Link Information: ACTIVE


Interconnect Port 1 :
                   Port Name: e1b-18
                         MTU: 4096
             Link Information: ACTIVE

cluster1::*> ha interconnect status show -node node1-02
  (system ha interconnect status show)

                        Node: node1-02
                Link 0 Status: up
                Link 1 Status: up
            Is Link 0 Active: true
            Is Link 1 Active: true
          IC RDMA Connection: up
                        Slot: 0
               Debug Firmware: no


Interconnect Port 0 :
                   Port Name: e1a-17
                         MTU: 4096
             Link Information: ACTIVE


Interconnect Port 1 :
```

```
                  Port Name: e1b-18
                        MTU: 4096
           Link Information: ACTIVE
.
.
.
```

c. **Storage ports**

i. Verify that all the storage ports are up with a healthy status:

```
storage port show -port-type ENET
```

Show example

```
cluster1::*> storage port show -port-type ENET


                                     Speed
Node                Port Type  Mode    (Gb/s) State    Status
------------------ ---- ----- ------- ------ --------
-----------
node1-01
                    e10a ENET  -          100 enabled  online
                    e10b ENET  -          100 enabled  online
                    e11a ENET  -          100 enabled  online
                    e11b ENET  -          100 enabled  online
node1-02
                    e10a ENET  -          100 enabled  online
                    e10b ENET  -          100 enabled  online
                    e11a ENET  -          100 enabled  online
                    e11b ENET  -          100 enabled  online
node1-03
                    e10a ENET  -          100 enabled  online
                    e10b ENET  -          100 enabled  online
                    e11a ENET  -          100 enabled  online
node1-04
                    e10a ENET  -          100 enabled  online
                    e10b ENET  -          100 enabled  online
                    e11a ENET  -          100 enabled  online
                    e11b ENET  -          100 enabled  online
16 entries were displayed.
```

d. **Storage shelf ports**

i. Verify that all the storage shelf ports are up with a healthy status:

```
storage shelf port show
```

Show example

```
cluster1::*> storage shelf port show

Shelf ID Module State        Internal?
-------- -- ------ ---------- ---------
1.1
         0 A      connected    false
         1 A      connected    false
         2 A      connected    false
         3 A      connected    false
         4 A      connected    false
         5 A      connected    false
         6 A      connected    false
         7 A      connected    false
         8 B      connected    false
         9 B      connected    false
        10 B      connected    false
        11 B      connected    false
        12 B      connected    false
        13 B      connected    false
        14 B      connected    false
        15 B      connected    false

16 entries were displayed.
```

ii. Verify the connection status of all the storage shelf ports:

```
storage shelf port show -fields remote-device,remote-
port,connector-state
```

Show example

```
cluster1::*> storage shelf port show -fields remote-
device,remote-port,connector-state

shelf id connector-state remote-port    remote-device
----- -- -------------- -------------- -----------------
1.1   0  connected       Ethernet1/17/1 CX9332D-cs1
1.1   1  connected       Ethernet1/15/1 CX9364D-cs1
1.1   2  connected       Ethernet1/17/2 CX9332D-cs1
1.1   3  connected       Ethernet1/15/2 CX9364D-cs1
1.1   4  connected       Ethernet1/17/3 CX9332D-cs1
1.1   5  connected       Ethernet1/15/3 CX9364D-cs1
1.1   6  connected       Ethernet1/17/4 CX9332D-cs1
1.1   7  connected       Ethernet1/15/4 CX9364D-cs1
1.1   8  connected       Ethernet1/19/1 CX9332D-cs1
1.1   9  connected       Ethernet1/17/1 CX9364D-cs1
1.1   10 connected       Ethernet1/19/2 CX9332D-cs1
1.1   11 connected       Ethernet1/17/2 CX9364D-cs1
1.1   12 connected       Ethernet1/19/3 CX9332D-cs1
1.1   13 connected       Ethernet1/17/3 CX9364D-cs1
1.1   14 connected       Ethernet1/19/4 CX9332D-cs1
1.1   15 connected       Ethernet1/17/4 CX9364D-cs1

16 entries were displayed.
```

18. Verify that the cluster is healthy:

    `cluster show`

    Show example

```
cluster1::*> cluster show
Node                 Health   Eligibility   Epsilon
-------------------- -------- ------------- -------
node1-01             true     true          false
node1-02             true     true          false
node1-03             true     true          true
node1-04             true     true          false

4 entries were displayed.
```

19. Repeat steps 4 to 18 on switch cs2.

20. Enable auto-revert on the cluster LIFs.

```
network interface modify -vserver Cluster -lif * -auto-revert true
```

Step 3: Verify the cluster network configuration and cluster health

1. Verify that the switch ports connected to the cluster ports are **up**.

```
show interface brief
```

Show example

```
cs1# show interface brief | grep up
.
.
Eth1/9/3        1       eth  trunk  up      none
100G(D) --
Eth1/9/4        1       eth  trunk  up      none
100G(D) --
Eth1/15/1       1       eth  trunk  up      none
100G(D) --
Eth1/15/2       1       eth  trunk  up      none
100G(D) --
Eth1/15/3       1       eth  trunk  up      none
100G(D) --
Eth1/15/4       1       eth  trunk  up      none
100G(D) --
Eth1/16/1       1       eth  trunk  up      none
100G(D) --
Eth1/16/2       1       eth  trunk  up      none
100G(D) --
Eth1/16/3       1       eth  trunk  up      none
100G(D) --
Eth1/16/4       1       eth  trunk  up      none
100G(D) --
Eth1/17/1       1       eth  trunk  up      none
100G(D) --
Eth1/17/2       1       eth  trunk  up      none
100G(D) --
Eth1/17/3       1       eth  trunk  up      none
100G(D) --
Eth1/17/4       1       eth  trunk  up      none
100G(D) --
.
.
.
```

2. Verify that the expected nodes are still connected:

```
show cdp neighbors
```

Show example

```
cs1# show cdp neighbors
Capability Codes: R - Router, T - Trans-Bridge, B - Source-Route-
Bridge
                  S - Switch, H - Host, I - IGMP, r - Repeater,
                  V - VoIP-Phone, D - Remotely-Managed-Device,
                  s - Supports-STP-Dispute

Device-ID          Local Intrfce  Hldtme Capability  Platform
Port ID
cs2(FDOXXXXXXXX)    Eth1/31        179    R S I s   N9K-C9364D-GX2A
Eth1/63
cs2(FDOXXXXXXXX)    Eth1/32        179    R S I s   N9K-C9364D-GX2A
Eth1/64
node1-01            Eth1/4/1       123    H         AFX-1K
e1a
node1-01            Eth1/4/2       123    H         AFX-1K
e7a
node1-01            Eth1/4/3       123    H         AFX-1K
e10a
node1-01            Eth1/4/4       123    H         AFX-1K
e11a
node1-02            Eth1/9/1       138    H         AFX-1K
e1a
node1-02            Eth1/9/2       138    H         AFX-1K
e7a
node1-02            Eth1/9/3       138    H         AFX-1K
e10a
node1-02            Eth1/9/4       138    H         AFX-1K
e11a
node1-03            Eth1/15/1      138    H         AFX-1K
e1a
node1-03            Eth1/15/2      138    H         AFX-1K
e7a
node1-03            Eth1/15/3      138    H         AFX-1K
e10a
node1-03            Eth1/15/4      138    H         AFX-1K
e11a
node1-04            Eth1/16/1      173    H         AFX-1K
e1a
node1-04            Eth1/16/2      173    H         AFX-1K
e7a
node1-04            Eth1/16/3      173    H         AFX-1K
e10a
node1-04            Eth1/16/4      173    H         AFX-1K
```

```
e11a

Total entries displayed: 18
```

3. Verify that the cluster nodes are in their correct cluster VLANs using the following commands:

```
show vlan brief
```

```
show interface trunk
```

Show example

```
cs1# show vlan brief

VLAN Name                              Status    Ports
---- --------------------------------- ---------
------------------------------
1    default                           active    Po1, Po999, Eth1/31,
Eth1/32
                                                 Eth1/33, Eth1/34,
Eth1/1/1
                                                 Eth1/1/2, Eth1/1/3,
Eth1/1/4
                                                 Eth1/2/1, Eth1/2/2,
Eth1/2/3
                                                 Eth1/2/4, Eth1/3/1,
Eth1/3/2
                                                 Eth1/3/3, Eth1/3/4,
Eth1/4/1
                                                 Eth1/4/2, Eth1/4/3,
Eth1/4/4
                                                 Eth1/5/1, Eth1/5/2,
Eth1/5/3
                                                 Eth1/5/4, Eth1/6/1,
Eth1/6/2
                                                 Eth1/6/3, Eth1/6/4,
Eth1/7/1
                                                 Eth1/7/2, Eth1/7/3,
Eth1/7/4
                                                 Eth1/8/1, Eth1/8/2,
Eth1/8/3
                                                 Eth1/8/4, Eth1/9/1,
Eth1/9/2
                                                 Eth1/9/3, Eth1/9/4,
Eth1/10/1
                                                 Eth1/10/2,
Eth1/10/3, Eth1/10/4
                                                 Eth1/11/1,
Eth1/11/2, Eth1/11/3
                                                 Eth1/11/4,
Eth1/12/1, Eth1/12/2
                                                 Eth1/12/3,
Eth1/12/4, Eth1/13/1
                                                 Eth1/13/2,
Eth1/13/3, Eth1/13/4
                                                 Eth1/14/1,
```

```
Eth1/14/2, Eth1/14/3
                                                    Eth1/14/4,
Eth1/15/1, Eth1/15/2
                                                    Eth1/15/3,
Eth1/15/4, Eth1/16/1
                                                    Eth1/16/2,
Eth1/16/3, Eth1/16/4
                                                    Eth1/17/1,
Eth1/17/2, Eth1/17/3
                                                    Eth1/17/4,
Eth1/18/1, Eth1/18/2
                                                    Eth1/18/3,
Eth1/18/4, Eth1/19/1
                                                    Eth1/19/2,
Eth1/19/3, Eth1/19/4
                                                    Eth1/20/1,
Eth1/20/2, Eth1/20/3
                                                    Eth1/20/4,
Eth1/21/1, Eth1/21/2
                                                    Eth1/21/3,
Eth1/21/4, Eth1/22/1
                                                    Eth1/22/2,
Eth1/22/3, Eth1/22/4
                                                    Eth1/23/1,
Eth1/23/2, Eth1/23/3
                                                    Eth1/23/4,
Eth1/24/1, Eth1/24/2
                                                    Eth1/24/3,
Eth1/24/4, Eth1/25/1
                                                    Eth1/25/2,
Eth1/25/3, Eth1/25/4
                                                    Eth1/26/1,
Eth1/26/2, Eth1/26/3
                                                    Eth1/26/4,
Eth1/27/1, Eth1/27/2
                                                    Eth1/27/3,
Eth1/27/4, Eth1/28/1
                                                    Eth1/28/2,
Eth1/28/3, Eth1/28/4
                                                    Eth1/29/1,
Eth1/29/2, Eth1/29/3
                                                    Eth1/29/4,
Eth1/30/1, Eth1/30/2
                                                    Eth1/30/3, Eth1/30/4
17   VLAN0017                         active    Eth1/1/1, Eth1/1/2,
Eth1/1/3
```

```
                                                    Eth1/1/4, Eth1/2/1,
Eth1/2/2
                                                    Eth1/2/3, Eth1/2/4,
Eth1/3/1
                                                    Eth1/3/2, Eth1/3/3,
Eth1/3/4
                                                    Eth1/4/1, Eth1/4/2,
Eth1/4/3
                                                    Eth1/4/4, Eth1/5/1,
Eth1/5/2
                                                    Eth1/5/3, Eth1/5/4,
Eth1/6/1
                                                    Eth1/6/2, Eth1/6/3,
Eth1/6/4
                                                    Eth1/7/1, Eth1/7/2,
Eth1/7/3
                                                    Eth1/7/4, Eth1/8/1,
Eth1/8/2
                                                    Eth1/8/3, Eth1/8/4,
Eth1/9/1
                                                    Eth1/9/2, Eth1/9/3,
Eth1/9/4
                                                    Eth1/10/1,
Eth1/10/2, Eth1/10/3
                                                    Eth1/10/4,
Eth1/11/1, Eth1/11/2
                                                    Eth1/11/3,
Eth1/11/4, Eth1/12/1
                                                    Eth1/12/2,
Eth1/12/3, Eth1/12/4
                                                    Eth1/13/1,
Eth1/13/2, Eth1/13/3
                                                    Eth1/13/4,
Eth1/14/1, Eth1/14/2
                                                    Eth1/14/3,
Eth1/14/4, Eth1/15/1
                                                    Eth1/15/2,
Eth1/15/3, Eth1/15/4
                                                    Eth1/16/1,
Eth1/16/2, Eth1/16/3
                                                    Eth1/16/4,
Eth1/17/1, Eth1/17/2
                                                    Eth1/17/3,
Eth1/17/4, Eth1/18/1
                                                    Eth1/18/2,
Eth1/18/3, Eth1/18/4
```

```
                                                    Eth1/19/1,
Eth1/19/2, Eth1/19/3
                                                    Eth1/19/4,
Eth1/20/1, Eth1/20/2
                                                    Eth1/20/3,
Eth1/20/4, Eth1/21/1
                                                    Eth1/21/2,
Eth1/21/3, Eth1/21/4
                                                    Eth1/22/1,
Eth1/22/2, Eth1/22/3
                                                    Eth1/22/4,
Eth1/23/1, Eth1/23/2
                                                    Eth1/23/3,
Eth1/23/4, Eth1/24/1
                                                    Eth1/24/2,
Eth1/24/3, Eth1/24/4
                                                    Eth1/25/1,
Eth1/25/2, Eth1/25/3
                                                    Eth1/25/4,
Eth1/26/1, Eth1/26/2
                                                    Eth1/26/3,
Eth1/26/4, Eth1/27/1
                                                    Eth1/27/2,
Eth1/27/3, Eth1/27/4
                                                    Eth1/28/1,
Eth1/28/2, Eth1/28/3
                                                    Eth1/28/4,
Eth1/29/1, Eth1/29/2
                                                    Eth1/29/3,
Eth1/29/4, Eth1/30/1
                                                    Eth1/30/2,
Eth1/30/3, Eth1/30/4
18   VLAN0018                         active    Eth1/1/1, Eth1/1/2,
Eth1/1/3
                                                    Eth1/1/4, Eth1/2/1,
Eth1/2/2
                                                    Eth1/2/3, Eth1/2/4,
Eth1/3/1
                                                    Eth1/3/2, Eth1/3/3,
Eth1/3/4
                                                    Eth1/4/1, Eth1/4/2,
Eth1/4/3
                                                    Eth1/4/4, Eth1/5/1,
Eth1/5/2
                                                    Eth1/5/3, Eth1/5/4,
Eth1/6/1
```

```
                                                    Eth1/6/2, Eth1/6/3,
Eth1/6/4
                                                    Eth1/7/1, Eth1/7/2,
Eth1/7/3
                                                    Eth1/7/4, Eth1/8/1,
Eth1/8/2
                                                    Eth1/8/3, Eth1/8/4,
Eth1/9/1
                                                    Eth1/9/2, Eth1/9/3,
Eth1/9/4
                                                    Eth1/10/1,
Eth1/10/2, Eth1/10/3
                                                    Eth1/10/4,
Eth1/11/1, Eth1/11/2
                                                    Eth1/11/3,
Eth1/11/4, Eth1/12/1
                                                    Eth1/12/2,
Eth1/12/3, Eth1/12/4
                                                    Eth1/13/1,
Eth1/13/2, Eth1/13/3
                                                    Eth1/13/4,
Eth1/14/1, Eth1/14/2
                                                    Eth1/14/3,
Eth1/14/4, Eth1/15/1
                                                    Eth1/15/2,
Eth1/15/3, Eth1/15/4
                                                    Eth1/16/1,
Eth1/16/2, Eth1/16/3
                                                    Eth1/16/4,
Eth1/17/1, Eth1/17/2
                                                    Eth1/17/3,
Eth1/17/4, Eth1/18/1
                                                    Eth1/18/2,
Eth1/18/3, Eth1/18/4
                                                    Eth1/19/1,
Eth1/19/2, Eth1/19/3
                                                    Eth1/19/4,
Eth1/20/1, Eth1/20/2
                                                    Eth1/20/3,
Eth1/20/4, Eth1/21/1
                                                    Eth1/21/2,
Eth1/21/3, Eth1/21/4
                                                    Eth1/22/1,
Eth1/22/2, Eth1/22/3
                                                    Eth1/22/4,
Eth1/23/1, Eth1/23/2
```

```
                                                  Eth1/23/3,
Eth1/23/4, Eth1/24/1
                                                  Eth1/24/2,
Eth1/24/3, Eth1/24/4
                                                  Eth1/25/1,
Eth1/25/2, Eth1/25/3
                                                  Eth1/25/4,
Eth1/26/1, Eth1/26/2
                                                  Eth1/26/3,
Eth1/26/4, Eth1/27/1
                                                  Eth1/27/2,
Eth1/27/3, Eth1/27/4
                                                  Eth1/28/1,
Eth1/28/2, Eth1/28/3
                                                  Eth1/28/4,
Eth1/29/1, Eth1/29/2
                                                  Eth1/29/3,
Eth1/29/4, Eth1/30/1
                                                  Eth1/30/2,
Eth1/30/3, Eth1/30/4
30   VLAN0030                         active    Eth1/1/1, Eth1/1/2,
Eth1/1/3
                                                  Eth1/1/4, Eth1/2/1,
Eth1/2/2
                                                  Eth1/2/3, Eth1/2/4,
Eth1/3/1
                                                  Eth1/3/2, Eth1/3/3,
Eth1/3/4
                                                  Eth1/4/1, Eth1/4/2,
Eth1/4/3
                                                  Eth1/4/4, Eth1/5/1,
Eth1/5/2
                                                  Eth1/5/3, Eth1/5/4,
Eth1/6/1
                                                  Eth1/6/2, Eth1/6/3,
Eth1/6/4
                                                  Eth1/7/1, Eth1/7/2,
Eth1/7/3
                                                  Eth1/7/4, Eth1/8/1,
Eth1/8/2
                                                  Eth1/8/3, Eth1/8/4,
Eth1/9/1
                                                  Eth1/9/2, Eth1/9/3,
Eth1/9/4
                                                  Eth1/10/1,
Eth1/10/2, Eth1/10/3
```

```
                                                    Eth1/10/4,
Eth1/11/1, Eth1/11/2
                                                    Eth1/11/3,
Eth1/11/4, Eth1/12/1
                                                    Eth1/12/2,
Eth1/12/3, Eth1/12/4
                                                    Eth1/13/1,
Eth1/13/2, Eth1/13/3
                                                    Eth1/13/4,
Eth1/14/1, Eth1/14/2
                                                    Eth1/14/3,
Eth1/14/4, Eth1/15/1
                                                    Eth1/15/2,
Eth1/15/3, Eth1/15/4
                                                    Eth1/16/1,
Eth1/16/2, Eth1/16/3
                                                    Eth1/16/4,
Eth1/17/1, Eth1/17/2
                                                    Eth1/17/3,
Eth1/17/4, Eth1/18/1
                                                    Eth1/18/2,
Eth1/18/3, Eth1/18/4
                                                    Eth1/19/1,
Eth1/19/2, Eth1/19/3
                                                    Eth1/19/4,
Eth1/20/1, Eth1/20/2
                                                    Eth1/20/3,
Eth1/20/4, Eth1/21/1
                                                    Eth1/21/2,
Eth1/21/3, Eth1/21/4
                                                    Eth1/22/1,
Eth1/22/2, Eth1/22/3
                                                    Eth1/22/4,
Eth1/23/1, Eth1/23/2
                                                    Eth1/23/3,
Eth1/23/4, Eth1/24/1
                                                    Eth1/24/2,
Eth1/24/3, Eth1/24/4
                                                    Eth1/25/1,
Eth1/25/2, Eth1/25/3
                                                    Eth1/25/4,
Eth1/26/1, Eth1/26/2
                                                    Eth1/26/3,
Eth1/26/4, Eth1/27/1
                                                    Eth1/27/2,
Eth1/27/3, Eth1/27/4
```

```
                                                  Eth1/28/1,
Eth1/28/2, Eth1/28/3
                                                  Eth1/28/4,
Eth1/29/1, Eth1/29/2
                                                  Eth1/29/3,
Eth1/29/4, Eth1/30/1
                                                  Eth1/30/2,
Eth1/30/3, Eth1/30/4
40   VLAN0040                         active    Eth1/1/1, Eth1/1/2,
Eth1/1/3
                                                  Eth1/1/4, Eth1/2/1,
Eth1/2/2
                                                  Eth1/2/3, Eth1/2/4,
Eth1/3/1
                                                  Eth1/3/2, Eth1/3/3,
Eth1/3/4
                                                  Eth1/4/1, Eth1/4/2,
Eth1/4/3
                                                  Eth1/4/4, Eth1/5/1,
Eth1/5/2
                                                  Eth1/5/3, Eth1/5/4,
Eth1/6/1
                                                  Eth1/6/2, Eth1/6/3,
Eth1/6/4
                                                  Eth1/7/1, Eth1/7/2,
Eth1/7/3
                                                  Eth1/7/4, Eth1/8/1,
Eth1/8/2
                                                  Eth1/8/3, Eth1/8/4,
Eth1/9/1
                                                  Eth1/9/2, Eth1/9/3,
Eth1/9/4
                                                  Eth1/10/1,
Eth1/10/2, Eth1/10/3
                                                  Eth1/10/4,
Eth1/11/1, Eth1/11/2
                                                  Eth1/11/3,
Eth1/11/4, Eth1/12/1
                                                  Eth1/12/2,
Eth1/12/3, Eth1/12/4
                                                  Eth1/13/1,
Eth1/13/2, Eth1/13/3
                                                  Eth1/13/4,
Eth1/14/1, Eth1/14/2
                                                  Eth1/14/3,
Eth1/14/4, Eth1/15/1
```

```
                                                    Eth1/15/2,
Eth1/15/3, Eth1/15/4
                                                    Eth1/16/1,
Eth1/16/2, Eth1/16/3
                                                    Eth1/16/4,
Eth1/17/1, Eth1/17/2
                                                    Eth1/17/3,
Eth1/17/4, Eth1/18/1
                                                    Eth1/18/2,
Eth1/18/3, Eth1/18/4
                                                    Eth1/19/1,
Eth1/19/2, Eth1/19/3
                                                    Eth1/19/4,
Eth1/20/1, Eth1/20/2
                                                    Eth1/20/3,
Eth1/20/4, Eth1/21/1
                                                    Eth1/21/2,
Eth1/21/3, Eth1/21/4
                                                    Eth1/22/1,
Eth1/22/2, Eth1/22/3
                                                    Eth1/22/4,
Eth1/23/1, Eth1/23/2
                                                    Eth1/23/3,
Eth1/23/4, Eth1/24/1
                                                    Eth1/24/2,
Eth1/24/3, Eth1/24/4
                                                    Eth1/25/1,
Eth1/25/2, Eth1/25/3
                                                    Eth1/25/4,
Eth1/26/1, Eth1/26/2
                                                    Eth1/26/3,
Eth1/26/4, Eth1/27/1
                                                    Eth1/27/2,
Eth1/27/3, Eth1/27/4
                                                    Eth1/28/1,
Eth1/28/2, Eth1/28/3
                                                    Eth1/28/4,
Eth1/29/1, Eth1/29/2
                                                    Eth1/29/3,
Eth1/29/4, Eth1/30/1
                                                    Eth1/30/2,
Eth1/30/3, Eth1/30/4


cs1# show interface trunk
--------------------------------------------------------------------------------
```

```
------------
Port          Native  Status        Port
              Vlan                  Channel
--------------------------------------------------------------------------
------------
Eth1/1/1      1       trunking      --
Eth1/1/2      1       trunking      --
Eth1/1/3      1       trunking      --
Eth1/1/4      1       trunking      --
Eth1/2/1      1       trunking      --
Eth1/2/2      1       trunking      --
Eth1/2/3      1       trunking      --
Eth1/2/4      1       trunking      --
.
.
.
Eth1/30/1     none
Eth1/30/2     none
Eth1/30/3     none
Eth1/30/4     none
Eth1/31       none
Eth1/32       none
Po1           1
```

For specific port and VLAN usage details, refer to the banner and important notes section in your RCF.

4. Verify that the ISL between cs1 and cs2 is functional:

```
show port-channel summary
```

Show example

```
cs1# show port-channel summary
Flags:  D - Down        P - Up in port-channel (members)
        I - Individual  H - Hot-standby (LACP only)
        s - Suspended   r - Module-removed
        b - BFD Session Wait
        S - Switched    R - Routed
        U - Up (port-channel)
        p - Up in delay-lacp mode (member)
        M - Not in use. Min-links not met
--------------------------------------------------------------------------
------------
Group Port-       Type     Protocol  Member Ports
      Channel
--------------------------------------------------------------------------
------------
1     Po1(SU)     Eth      LACP      Eth1/31(P)   Eth1/32(P)
999   Po999(SD)   Eth      NONE      --
cs1#
```

5. Verify that the cluster LIFs have reverted to their home port:

```
network interface show -role cluster
```

Show example

```
cluster1::*> network interface show -role cluster

            Logical         Status     Network            Current
Current Is
Vserver     Interface       Admin/Oper Address/Mask       Node
Port    Home
----------- --------------- ---------- ------------------
----------- ------- ----
Cluster
            node1-01_clus1  up/up      169.254.36.44/16   node1-01
e7a     true
            node1-01_clus2  up/up      169.254.7.5/16     node1-01
e7b     true
            node1-02_clus1  up/up      169.254.197.206/16 node1-02
e7a     true
            node1-02_clus2  up/up      169.254.195.186/16 node1-02
e7b     true
            node1-03_clus1  up/up      169.254.192.49/16  node1-03
e7a     true
            node1-03_clus2  up/up      169.254.182.76/16  node1-03
e7b     true
            node1-04_clus1  up/up      169.254.59.49/16   node1-04
e7a     true
            node1-04_clus2  up/up      169.254.62.244/16  node1-04
e7b     true

8 entries were displayed.
```

If any cluster LIFs have not returned to their home ports, revert them manually from the local node:

`network interface revert -vserver vserver_name -lif <lif-name>`

6. Verify that the cluster is healthy:

`cluster show`

Show example

```
cluster1::*> cluster show
Node                 Health  Eligibility   Epsilon
-------------------- ------- ------------- -------
node1-01             true    true          false
node1-02             true    true          false
node1-03             true    true          true
node1-04             true    true          false

4 entries were displayed.
```

7. Verify the connectivity of the remote cluster interfaces:
   a. You can use the `network interface check cluster-connectivity show` command to display the details of an accessibility check for cluster connectivity:

```
network interface check cluster-connectivity show
```

Show example

```
cluster1::*> network interface check cluster-connectivity show

                                  Source           Destination
Packet
Node   Date                       LIF              LIF
Loss
------ -------------------------- ---------------
-------------- -----------
node1-01
       6/4/2025 03:13:33 -04:00   node1-01_clus2  node1-02_clus1
none
       6/4/2025 03:13:34 -04:00   node1-01_clus2  node1-02_clus1
none


node1-02
       6/4/2025 03:13:33 -04:00   node1-02_clus2  node1-01_clus1
none
       6/4/2025 03:13:34 -04:00   node1-02_clus2  node1-01_clus2
none
.
.
.
```

b. Alternatively, you can use the `cluster ping-cluster -node <node-name>` command to check the connectivity:

```
cluster ping-cluster -node <node-name>
```

Show example

```
cluster1::*> cluster ping-cluster -node local
Host is node1-04
Getting addresses from network interface table...
Cluster node1-01_clus1 169.254.36.44 node1-01 e7a
Cluster node1-01_clus2 169.254.7.5   node1-01 e7b
Cluster node1-02_clus1 169.254.197.206 node1-02 e7a
Cluster node1-02_clus2 169.254.195.186 node1-02 e7b
Cluster node1-03_clus1 169.254.192.49 node1-03 e7a
Cluster node1-03_clus2 169.254.182.76 node1-03 e7b
Cluster node1-04_clus1 169.254.59.49 node1-04 e7a
Cluster node1-04_clus2 169.254.62.244 node1-04 e7b
Local = 169.254.59.49 169.254.62.244
Remote = 169.254.36.44 169.254.7.5 169.254.197.206
169.254.195.186 169.254.192.49 169.254.182.76
Cluster Vserver Id = 4294967293
Ping status:
............
Basic connectivity succeeds on 12 path(s)
Basic connectivity fails on 0 path(s)
................................................
Detected 9000 byte MTU on 12 path(s):
    Local 169.254.59.49 to Remote 169.254.182.76
    Local 169.254.59.49 to Remote 169.254.192.49
    Local 169.254.59.49 to Remote 169.254.195.186
    Local 169.254.59.49 to Remote 169.254.197.206
    Local 169.254.59.49 to Remote 169.254.36.44
    Local 169.254.59.49 to Remote 169.254.7.5
    Local 169.254.62.244 to Remote 169.254.182.76
    Local 169.254.62.244 to Remote 169.254.192.49
    Local 169.254.62.244 to Remote 169.254.195.186
    Local 169.254.62.244 to Remote 169.254.197.206
    Local 169.254.62.244 to Remote 169.254.36.44
    Local 169.254.62.244 to Remote 169.254.7.5
Larger than PMTU communication succeeds on 12 path(s)
RPC status:
6 paths up, 0 paths down (tcp check)
6 paths up, 0 paths down (udp check)
```

What's next?

After you've upgraded your RCF, you verify the SSH configuration.

Verify your SSH configuration

If you are using the Ethernet Switch Health Monitor (CSHM) and log collection features, verify that SSH and SSH keys are enabled on the switches.

Steps

1. Verify that SSH is enabled:

```
(switch) show ssh server
ssh version 2 is enabled
```

2. Verify that the SSH keys are enabled:

```
show ssh key
```

Show example

```
(switch)# show ssh key


rsa Keys generated:Wed May 14 18:49:37 2025

ssh-rsa
AAAAB3NzaC1yc2EAAAADAQABAAAAgQCndfdJesautdCwk5Mk/7pKOFl0IeShc9uBtj74
F52vbjyf1FHOCXX7Xf3Vopxs6L1hbzgCpFLo9E7pZBd3I+1AoLyQULtR3svzNieGY8ml
WZGLtpKf/P2fDCd8JVJaejrwQhm49WUPiC6ziEqBDMOGhJpD2e9++umyDdr6
NbmK8Q==


bitcount:1024
fingerprint:
SHA256:QtNU+Qq2I4ZfYwEfMEB1+z8w7xaKTlantTdsjLBx+OU

could not retrieve dsa key information

ecdsa Keys generated:Wed May 14 18:50:56 2025


ecdsa-sha2-nistp521
AAAAE2VjZHNhLXNoYTItbmlzdHA1MjEAAAAIbmlzdHA1MjEAAACFBAAYnv17T+JlGmH8
rg81xiOow0mPmkbkIG0o7h9EchixO3i3KjgQr8AwqkRHNTcQC3lRnizhJFUeMGCwuQTu
rziRCwE6fAOkWa2MRyXA1DYRKKXjVEOnW9+MvinMipHQ0cCc
YSExhh7j4HvWHIuYv8RmD7e3rmDQFlyyiLwdmpGfas2yaw==


bitcount:521
fingerprint:
SHA256:7cpZ5NGnIq5Iamw67ke+9o4qG9D3xxmGPauVl4X5934


(switch)# show feature | include scpServer
scpServer             1          enabled
(switch)# show feature | include ssh
sshServer             1          enabled
(switch)#
```

What's next?

After you've verified your SSH configuration, you configure switch health monitoring.

Reset the 9332D-GX2B switch to factory defaults

To reset the 9332D-GX2B switch to factory defaults, you must erase the 9332D-GX2B switch settings.

About this task

- You must be connected to the switch using the serial console.
- This task resets the configuration of the management network.

Steps

1. Erase the existing configuration:

   `write erase`

   ```
   (cs2)# write erase

   Warning: This command will erase the startup-configuration.
   Do you wish to proceed anyway? (y/n) [n] y
   ```

2. Reload the switch software:

   `reload`

   ```
   (cs2)# reload

   This command will reboot the system. (y/n)? [n] y
   ```

   The system reboots and enters the configuration wizard. During the boot, if you receive the prompt “Abort Auto Provisioning and continue with normal setup? (yes/no)[n]”, you should respond **yes** to proceed.

Replace a Cisco Nexus 9332D-GX2B switch

Follow these steps to replace a defective Nexus 9332D-GX2B switch in a shared network. This is a nondisruptive procedure (NDU).

Review requirements

Before performing the switch replacement, make sure that:

- You have verified the switch serial number to ensure that the correct switch is replaced.
- On the existing cluster and network infrastructure:
  - The existing cluster is verified as completely functional, with at least one fully connected cluster switch.
  - All cluster ports are up.
  - All cluster logical interfaces (LIFs) are up and on their home ports.
  - The ONTAP `cluster ping-cluster -node <node-name>` command must indicate that basic

connectivity and larger than PMTU communication are successful on all paths.

- On the Nexus 9332D-GX2B replacement switch:
  - Management network connectivity on the replacement switch is functional.
  - Console access to the replacement switch is in place.
  - The node connections are ports 1/1 through 1/30.
  - All Inter-Switch Link (ISL) ports is disabled on ports 1/31 and 1/32.
  - The desired reference configuration file (RCF) and NX-OS operating system image switch is loaded onto the switch.
  - Initial customization of the switch is complete, as detailed in Configure the 9332D-GX2B cluster switch.

    Any previous site customizations, such as STP, SNMP, and SSH, are copied to the new switch.
- You have executed the command for migrating a cluster LIF from the node where the cluster LIF is hosted.

Enable console logging

NetApp strongly recommends that you enable console logging on the devices that you are using and take the following actions when replacing your switch:

- Leave AutoSupport enabled during maintenance.
- Trigger a maintenance AutoSupport before and after maintenance to disable case creation for the duration of the maintenance. See this Knowledge Base article SU92: How to suppress automatic case creation during scheduled maintenance windows for further details.
- Enable session logging for any CLI sessions. For instructions on how to enable session logging, review the "Logging Session Output" section in this Knowledge Base article How to configure PuTTY for optimal connectivity to ONTAP systems.

Replace the switch

About the examples

The examples in this procedure use the following switch and node nomenclature:

- The names of the existing Nexus 9332D-GX2B switches are cs1 and cs2.
- The name of the new Nexus 9332D-GX2B switch is newcs2.
- The node names are node1-01, node1-02, node1-03, and node1-04.
- The cluster LIF names are node1-01_clus1 and node1-01_clus2 for node1-01, node1-02_clus1 and node1-02_clus2 for node1-02, node1-03_clus1 and node1-03_clus2 for node1-03, and node1-04_clus1 and node1-04_clus2 for node1-04.
- The prompt for changes to all cluster nodes is cluster1::*>

About this task

The following procedure is based on the following cluster network topology:

Show example

```
cluster1::*> network port show -ipspace Cluster

Node: node1-01

Ignore
                                                  Speed(Mbps) Health
Health
Port      IPspace      Broadcast Domain Link MTU  Admin/Oper  Status
Status
--------- ------------ ---------------- ---- ---- ----------- --------
------
e7a       Cluster      Cluster          up   9000  auto/100000 healthy
false
e7b       Cluster      Cluster          up   9000  auto/100000 healthy
false


Node: node1-02

Ignore
                                                  Speed(Mbps) Health
Health
Port      IPspace      Broadcast Domain Link MTU  Admin/Oper  Status
Status
--------- ------------ ---------------- ---- ---- ----------- --------
------
e7a       Cluster      Cluster          up   9000  auto/100000 healthy
false
e7b       Cluster      Cluster          up   9000  auto/100000 healthy
false


Node: node1-03

Ignore
                                                  Speed(Mbps) Health
Health
Port      IPspace      Broadcast Domain Link MTU  Admin/Oper  Status
Status
--------- ------------ ---------------- ---- ---- ----------- --------
------
e7a       Cluster      Cluster          up   9000  auto/100000 healthy
false
e7b       Cluster      Cluster          up   9000  auto/100000 healthy
```

```
false


Node: node1-04

Ignore
                                                  Speed(Mbps) Health
Health
Port      IPspace      Broadcast Domain Link MTU  Admin/Oper  Status
Status
--------- ------------ ---------------- ---- ---- ----------- --------
------
e7a       Cluster      Cluster          up   9000  auto/100000 healthy
false
e7b       Cluster      Cluster          up   9000  auto/100000 healthy
false

8 entries were displayed.


cluster1::*> network interface show -vserver Cluster
            Logical    Status     Network            Current
Current   Is
Vserver     Interface  Admin/Oper Address/Mask       Node        Port
Home
----------- ---------- ---------- ------------------ -----------
--------- ----
Cluster
            node1-01_clus1 up/up  169.254.36.44/16    node1-01    e7a
true
            node1-01_clus2 up/up  169.254.7.5/16      node1-01    e7b
true
            node1-02_clus1 up/up  169.254.197.206/16  node1-02    e7a
true
            node1-02_clus2 up/up  169.254.195.186/16  node1-02    e7b
true
            node1-03_clus1 up/up  169.254.192.49/16   node1-03    e7a
true
            node1-03_clus2 up/up  169.254.182.76/16   node1-03    e7b
true
            node1-04_clus1 up/up  169.254.59.49/16    node1-04    e7a
true
            node1-04_clus2 up/up  169.254.62.244/16   node1-04    e7b
true

8 entries were displayed.
```

```
cluster1::*> network device-discovery show -protocol cdp

Node/       Local  Discovered
Protocol    Port   Device (LLDP: ChassisID)  Interface         Platform
----------- ------ ------------------------- ----------------
----------------
node1-01/cdp
            e10a   cs1(FLMXXXXXXXX)          Ethernet1/16/3    N9K-
C9332D-GX2B
            e10b   cs2(FDOXXXXXXXX)          Ethernet1/16/3    N9K-
C9332D-GX2B
            e11a   cs1(FLMXXXXXXXX)          Ethernet1/16/4    N9K-
C9332D-GX2B
            e11b   cs2(FDOXXXXXXXX)          Ethernet1/16/4    N9K-
C9332D-GX2B
            e1a    cs1(FLMXXXXXXXX)          Ethernet1/16/1    N9K-
C9332D-GX2B
            e1b    cs2(FDOXXXXXXXX)          Ethernet1/16/1    N9K-
C9332D-GX2B
            .
            .
            .
            e7a    cs1(FLMXXXXXXXX)          Ethernet1/16/2    N9K-
C9332D-GX2B
            e7b    cs2(FDOXXXXXXXX)          Ethernet1/16/2    N9K-
C9332D-GX2B

cs1# show cdp neighbors

Capability Codes: R - Router, T - Trans-Bridge, B - Source-Route-Bridge
                  S - Switch, H - Host, I - IGMP, r - Repeater,
                  V - VoIP-Phone, D - Remotely-Managed-Device,
                  s - Supports-STP-Dispute

Device-ID          Local Intrfce  Hldtme Capability  Platform      Port
ID
Device-ID          Local Intrfce  Hldtme Capability  Platform
Port ID
cs2(FDOXXXXXXXX)    Eth1/31        179    R S I s   N9K-C9364D-GX2A
Eth1/63
cs2(FDOXXXXXXXX)    Eth1/32        179    R S I s   N9K-C9364D-GX2A
Eth1/64
node1-01            Eth1/4/1       123    H         AFX-1K
e1a
node1-01            Eth1/4/2       123    H         AFX-1K
e7a
```

```
node1-01            Eth1/4/3       123    H         AFX-1K
e10a
node1-01            Eth1/4/4       123    H         AFX-1K
e11a
node1-02            Eth1/9/1       138    H         AFX-1K
e1a
node1-02            Eth1/9/2       138    H         AFX-1K
e7a
node1-02            Eth1/9/3       138    H         AFX-1K
e10a
node1-02            Eth1/9/4       138    H         AFX-1K
e11a
node1-03            Eth1/15/1      138    H         AFX-1K
e1a
node1-03            Eth1/15/2      138    H         AFX-1K
e7a
node1-03            Eth1/15/3      138    H         AFX-1K
e10a
node1-03            Eth1/15/4      138    H         AFX-1K
e11a
node1-04            Eth1/16/1      173    H         AFX-1K
e1a
node1-04            Eth1/16/2      173    H         AFX-1K
e7a
node1-04            Eth1/16/3      173    H         AFX-1K
e10a
node1-04            Eth1/16/4      173    H         AFX-1K
e11a

Total entries displayed: 18

cs2# show cdp neighbors

Capability Codes: R - Router, T - Trans-Bridge, B - Source-Route-Bridge
                  S - Switch, H - Host, I - IGMP, r - Repeater,
                  V - VoIP-Phone, D - Remotely-Managed-Device,
                  s - Supports-STP-Dispute

Device-ID          Local Intrfce  Hldtme Capability  Platform      Port
ID
Device-ID          Local Intrfce  Hldtme Capability  Platform
Port ID
cs1(FLMXXXXXXXX)    Eth1/31        179    R S I s   N9K-C9364D-GX2A
Eth1/63
cs1(FLMXXXXXXXX)    Eth1/32        179    R S I s   N9K-C9364D-GX2A
Eth1/64
```

```
node1-01            Eth1/4/1       123    H         AFX-1K
e1a
node1-01            Eth1/4/2       123    H         AFX-1K
e7a
node1-01            Eth1/4/3       123    H         AFX-1K
e10a
node1-01            Eth1/4/4       123    H         AFX-1K
e11a
node1-02            Eth1/9/1       138    H         AFX-1K
e1a
node1-02            Eth1/9/2       138    H         AFX-1K
e7a
node1-02            Eth1/9/3       138    H         AFX-1K
e10a
node1-02            Eth1/9/4       138    H         AFX-1K
e11a
node1-03            Eth1/15/1      138    H         AFX-1K
e1a
node1-03            Eth1/15/2      138    H         AFX-1K
e7a
node1-03            Eth1/15/3      138    H         AFX-1K
e10a
node1-03            Eth1/15/4      138    H         AFX-1K
e11a
node1-04            Eth1/16/1      173    H         AFX-1K
e1a
node1-04            Eth1/16/2      173    H         AFX-1K
e7a
node1-04            Eth1/16/3      173    H         AFX-1K
e10a
node1-04            Eth1/16/4      173    H         AFX-1K
e11a

Total entries displayed: 18
```

Step 1: Prepare for replacement

1. If AutoSupport is enabled on this cluster, suppress automatic case creation by invoking an AutoSupport message:

   ```
   system node autosupport invoke -node * -type all -message MAINT=xh
   ```

   where x is the duration of the maintenance window in hours.

   The AutoSupport message notifies technical support of this maintenance task so that automatic case creation is suppressed during the maintenance window.

2. Install the appropriate RCF and image on the switch, newcs2, and make any necessary site preparations.

   If necessary, verify, download, and install the appropriate versions of the RCF and NX-OS software for the new switch. If you have verified that the new switch is correctly set up and does not need updates to the RCF and NX-OS software, continue to step 2.

   a. Go to the *NetApp Cluster and Management Network Switches Reference Configuration File Description Page* on the NetApp Support Site.
   b. Click the link for the *Cluster Network and Management Network Compatibility Matrix*, and then note the required switch software version.
   c. Click your browser's back arrow to return to the Description page, click **CONTINUE**, accept the license agreement, and then go to the Download page.
   d. Follow the steps on the Download page to download the correct RCF and NX-OS files for the version of ONTAP software you are installing.
3. On the new switch, log in as admin and shut down all of the ports that will be connected to the node cluster interfaces (ports 1/1 to 1/30).

   If the switch that you are replacing is not functional and is powered down, go to Step 4. The LIFs on the cluster nodes should have already failed over to the other cluster port for each node.

   Show example

   ```
   newcs2# config
   newcs2(config)# interface e1/1/1-4,e1/2/1-4,e1/3/1-4,e1/4/1-
   4,e1/5/1-4,e1/6/1-4,e1/7/1-4,e1/8/1-4
   newcs2(config-if-range)# shutdown
   newcs2(config)# interface e1/9/1-4,e1/10/1-4,e1/11/1-4,e1/12/1-
   4,e1/13/1-4,e1/14/1-4,e1/15/1-4,e1/16/1-4
   newcs2(config-if-range)# shutdown
   newcs2(config)# interface e1/17/1-4,e1/18/1-4,e1/19/1-4,e1/20/1-
   4,e1/21/1-4,e1/22/1-44,e1/23/1-4
   newcs2(config-if-range)# shutdown
   newcs2(config)# interface e1/24/1-,e1/25/1-4,e1/26/1-4,e1/27/1-
   4,e1/28/1-4,e1/29/1-4,e1/30/1-44
   newcs2(config-if-range)# shutdown
   newcs2(config-if-range)# exit
   newcs2(config)# exit
   ```
4. Verify that all cluster LIFs have auto-revert enabled:

   ```
   network interface show -vserver Cluster -fields auto-revert
   ```

Show example

```
cluster1::> network interface show -vserver Cluster -fields auto-
revert

             Logical
Vserver      Interface        Auto-revert
------------ ---------------- -------------
Cluster      node1-01_clus1   true
Cluster      node1-02_clus2   true
Cluster      node1-03_clus1   true
Cluster      node1-04_clus2   true

4 entries were displayed.
```

5. Verify the connectivity of the remote cluster interfaces:

   a. You can use the `network interface check cluster-connectivity show` command to display the details of an accessibility check for cluster connectivity:

      ```
      network interface check cluster-connectivity show
      ```

Show example

```
cluster1::*> network interface check cluster-connectivity show
                                    Source          Destination
Packet
Node      Date                      LIF             LIF
Loss
--------- ------------------------- --------------
--------------- -----------
node1-01
          6/4/2025 03:13:33 -04:00   node1-01_clus2  node1-
02_clus1  none
          6/4/2025 03:13:34 -04:00   node1-01_clus2  node1-
02_clus2  none
node1-02
          6/4/2025 03:13:33 -04:00   node1-02_clus2  node1-
01_clus1  none
          6/4/2025 03:13:34 -04:00   node1-02_clus2  node1-
01_clus2  none
.
.
.
```

b. Alternatively, you can also use the `cluster ping-cluster -node <node-name>` command to check the connectivity:

```
cluster ping-cluster -node <node-name>
```

Show example

```
cluster1::*> cluster ping-cluster -node local
Host is node2
Getting addresses from network interface table...
Cluster node1_clus1 169.254.209.69 node1 e0a
Cluster node1_clus2 169.254.49.125 node1 e0b
Cluster node2_clus1 169.254.47.194 node2 e0a
Cluster node2_clus2 169.254.19.183 node2 e0b
Local = 169.254.47.194 169.254.19.183
Remote = 169.254.209.69 169.254.49.125
Cluster Vserver Id = 4294967293
Ping status:
....
Basic connectivity succeeds on 4 path(s)
Basic connectivity fails on 0 path(s)
................
Detected 9000 byte MTU on 4 path(s):
Local 169.254.47.194 to Remote 169.254.209.69
Local 169.254.47.194 to Remote 169.254.49.125
Local 169.254.19.183 to Remote 169.254.209.69
Local 169.254.19.183 to Remote 169.254.49.125
Larger than PMTU communication succeeds on 4 path(s)
RPC status:
2 paths up, 0 paths down (tcp check)
2 paths up, 0 paths down (udp check)
```

Step 2: Configure cables and ports

1. Shut down the ISL ports Eth1/31 and Eth1/32 on the Nexus 9332D-GX2B switch cs1.

```
cs1# config
Enter configuration commands, one per line. End with CNTL/Z.
cs1(config)# interface e1/31-32
cs1(config-if-range)# shutdown
cs1(config-if-range)# exit
cs1(config)# exit
```

2. Remove all of the cables from the Nexus 9332D-GX2B cs2 switch, and then connect them to the same ports on the 9332D-GX2B newcs2 switch.
3. Bring up the ISLs ports Eth1/31 and Eth1/32 between the cs1 and newcs2 switches, and then verify the port channel operation status.

   Port-Channel should indicate Po1(SU) and Member Ports should indicate Eth1/31(P) and Eth1/32(P).

Show example

This example enables ISL ports Eth1/31 and Eth1/32 and displays the port channel summary on switch cs1:

```
cs1# config
Enter configuration commands, one per line. End with CNTL/Z.
cs1(config)# int e1/31-32
cs1(config-if-range)# no shutdown
cs1(config-if-range)# exit
cs1(config)# exit
cs1#
cs1# show port-channel summary
Flags:  D - Down        P - Up in port-channel (members)
        I - Individual  H - Hot-standby (LACP only)
        s - Suspended   r - Module-removed
        b - BFD Session Wait
        S - Switched    R - Routed
        U - Up (port-channel)
        p - Up in delay-lacp mode (member)
        M - Not in use. Min-links not met
--------------------------------------------------------------------------
------------
Group Port-       Type     Protocol  Member Ports
      Channel
--------------------------------------------------------------------------
------------
1     Po1(SU)     Eth      LACP      Eth1/31(P)   Eth1/32(P)
999   Po999(SD)   Eth      NONE      --
```

4. Verify that port e7b is up on all nodes:

```
network port show ipspace Cluster
```

Show example

The output should be similar to the following:

```
cluster1::*> network port show -ipspace Cluster

Node: node1-01

Ignore
                                                  Speed(Mbps) Health
Health
Port      IPspace      Broadcast Domain Link MTU  Admin/Oper  Status
Status
--------- ------------ ---------------- ---- ---- -----------
-------- ------
e7a       Cluster      Cluster          up   9000  auto/100000
healthy false
e7b       Cluster      Cluster          up   9000  auto/100000
healthy false


Node: node1-02

Ignore
                                                  Speed(Mbps) Health
Health
Port      IPspace      Broadcast Domain Link MTU  Admin/Oper  Status
Status
--------- ------------ ---------------- ---- ---- -----------
-------- ------
e7a       Cluster      Cluster          up   9000  auto/100000
healthy false
e7b       Cluster      Cluster          up   9000  auto/100000
healthy false


Node: node1-03

Ignore
                                                  Speed(Mbps) Health
Health
Port      IPspace      Broadcast Domain Link MTU  Admin/Oper  Status
Status
--------- ------------ ---------------- ---- ---- -----------
-------- ------
e7a       Cluster      Cluster          up   9000  auto/100000
```

```
healthy false
e7b       Cluster      Cluster          up   9000  auto/100000
healthy false


Node: node1-04

Ignore
                                                  Speed(Mbps) Health
Health
Port      IPspace      Broadcast Domain Link MTU  Admin/Oper  Status
Status
--------- ------------ ---------------- ---- ---- -----------
-------- ------
e7a       Cluster      Cluster          up   9000  auto/100000
healthy false
e7b       Cluster      Cluster          up   9000  auto/100000
healthy false

8 entries were displayed.
```

5. On the same node you used in the previous step, revert the cluster LIF associated with the port in the previous step by using the network interface revert command.

Show example

In this example, LIF node1-01_clus2 on node1-01 is successfully reverted if the Home value is true and the port is e7b.

The following commands return LIF `node1-01_clus2` on `node1-01` to home port `e7a` and displays information about the LIFs on both nodes. Bringing up the first node is successful if the Is Home column is true for both cluster interfaces and they show the correct port assignments, in this example `e7a` and `e7b` on node1-01.

```
cluster1::*> network interface show -vserver Cluster

          Logical        Status     Network            Current
Current Is
Vserver   Interface      Admin/Oper Address/Mask       Node
Port    Home
--------- -------------- ---------- ------------------ ----------
------- -----
Cluster
          node1-01_clus1  up/up     169.254.209.69/16  node1-01
e7a     true
          node1-01_clus2  up/up     169.254.49.125/16  node1-01
e7b     true
          node1-02_clus1  up/up     169.254.47.194/16  node1-02
e7b     true
          node1-02_clus2  up/up     169.254.19.183/16  node1-02
e7a     false
            .
            .
            .
```

6. Display information about the nodes in a cluster:

   `cluster show`

Show example

This example shows that the node health for node1 and node2 in this cluster is true:

```
cluster1::*> cluster show

Node           Health  Eligibility
-------------- ------- ------------
node1-01       false   true
node1-02       true    true
node1-03       true    true
node1-04       true    true
```

7. Verify that all physical cluster ports are up:

```
network port show ipspace Cluster
```

Show example

```
cluster1::*> network port show -ipspace Cluster

Node: node1-01

Ignore
                                                  Speed(Mbps) Health
Health
Port      IPspace      Broadcast Domain Link MTU  Admin/Oper  Status
Status
--------- ------------ ---------------- ---- ---- -----------
-------- ------
e7a       Cluster      Cluster          up   9000  auto/100000
healthy false
e7b       Cluster      Cluster          up   9000  auto/100000
healthy false


Node: node1-02

Ignore
                                                  Speed(Mbps) Health
Health
Port      IPspace      Broadcast Domain Link MTU  Admin/Oper  Status
Status
--------- ------------ ---------------- ---- ---- -----------
-------- ------
e7a       Cluster      Cluster          up   9000  auto/100000
healthy false
e7b       Cluster      Cluster          up   9000  auto/100000
healthy false
.
.
.
```

8. Verify the connectivity of the remote cluster interfaces:

   a. You can use the `network interface check cluster-connectivity` command to display the details of an accessibility check for cluster connectivity:

      ```
      network interface check cluster-connectivity start
      ```

Show example

```
cluster1::*> network interface check cluster-connectivity show
                                    Source          Destination
Packet
Node      Date                      LIF             LIF
Loss
--------- ------------------------- --------------
--------------- -----------
node1-01
          6/4/2025 03:13:33 -04:00   node1-01_clus2  node1-
02_clus1  none
          6/4/2025 03:13:34 -04:00   node1-01_clus2  node1-
02_clus2  none
node1-02
          6/4/2025 03:13:33 -04:00   node1-02_clus2  node1-
01_clus1  none
          6/4/2025 03:13:34 -04:00   node1-02_clus2  node1-
01_clus2  none
.
.
.
```

b. Alternatively, you can also use the `cluster ping-cluster -node <node-name>` command to check the connectivity:

```
cluster ping-cluster -node <node-name>
```

Show example

```
cluster1::*> cluster ping-cluster -node local
Host is node2
Getting addresses from network interface table...
Cluster node1_clus1 169.254.209.69 node1 e0a
Cluster node1_clus2 169.254.49.125 node1 e0b
Cluster node2_clus1 169.254.47.194 node2 e0a
Cluster node2_clus2 169.254.19.183 node2 e0b
Local = 169.254.47.194 169.254.19.183
Remote = 169.254.209.69 169.254.49.125
Cluster Vserver Id = 4294967293
Ping status:
....
Basic connectivity succeeds on 4 path(s)
Basic connectivity fails on 0 path(s)
................
Detected 9000 byte MTU on 4 path(s):
Local 169.254.47.194 to Remote 169.254.209.69
Local 169.254.47.194 to Remote 169.254.49.125
Local 169.254.19.183 to Remote 169.254.209.69
Local 169.254.19.183 to Remote 169.254.49.125
Larger than PMTU communication succeeds on 4 path(s)
RPC status:
2 paths up, 0 paths down (tcp check)
2 paths up, 0 paths down (udp check)
```

Step 3: Verify the configuration

1. Verify the health of all the ports on the cluster.
   a. **Cluster ports**
      i. Verify that cluster ports are up and healthy across all nodes in the cluster:

```
network port show ipspace Cluster
```

```
network interface show -vserver Cluster
```

```
network device-discovery show -protocol cdp
```

```
show cdp neighbors
```

Show example

```
cluster1::*> network port show -ipspace Cluster
Node: node1-01

Ignore
                                                  Speed(Mbps)
Health   Health
Port      IPspace      Broadcast Domain Link MTU  Admin/Oper
Status   Status
--------- ------------ ---------------- ---- ---- -----------
-------- ------
e7a       Cluster      Cluster          up   9000  auto/100000
healthy false
e7b       Cluster      Cluster          up   9000  auto/100000
healthy false


Node: node1-02

Ignore
                                                  Speed(Mbps)
Health   Health
Port      IPspace      Broadcast Domain Link MTU  Admin/Oper
Status   Status
--------- ------------ ---------------- ---- ---- -----------
-------- ------
e7a       Cluster      Cluster          up   9000  auto/100000
healthy false
e7b       Cluster      Cluster          up   9000  auto/100000
healthy false


Node: node1-03

Ignore
                                                  Speed(Mbps)
Health   Health
Port      IPspace      Broadcast Domain Link MTU  Admin/Oper
Status   Status
--------- ------------ ---------------- ---- ---- -----------
-------- ------
e7a       Cluster      Cluster          up   9000  auto/100000
healthy false
e7b       Cluster      Cluster          up   9000  auto/100000
healthy false
```

```
Node: node1-04

Ignore
                                                          Speed(Mbps)
Health   Health
Port      IPspace      Broadcast Domain Link MTU  Admin/Oper
Status   Status
--------- ------------ ---------------- ---- ---- -----------
-------- ------
e7a       Cluster      Cluster          up   9000  auto/100000
healthy false
e7b       Cluster      Cluster          up   9000  auto/100000
healthy false

8 entries were displayed.

cluster1::*> network interface show -vserver Cluster

          Logical       Status     Network            Current
Current Is
Vserver   Interface     Admin/Oper Address/Mask       Node
Port    Home
--------- ------------ ---------- ------------------
---------- ------- ----
Cluster
          node1-01_clus1  up/up    169.254.209.69/16  node1-01
e7a     true
          node1-01_clus2  up/up    169.254.49.125/16  node1-01
e7b     true
          node1-02_clus1  up/up    169.254.47.194/16  node1-02
e7b     true
          node1-02_clus2  up/up    169.254.19.183/16  node1-02
e7a     true
          node1-03_clus1  up/up    169.254.209.69/16  node1-03
e7a     true
          node1-03_clus2  up/up    169.254.49.125/16  node1-03
e7b     true
          node1-04_clus1  up/up    169.254.47.194/16  node1-04
e7b     true
          node1-04_clus2  up/up    169.254.19.183/16  node1-04
e7a     false

8 entries were displayed.
```

```
cluster1::> network device-discovery show -protocol cdp

Node/       Local  Discovered
Protocol    Port   Device (LLDP: ChassisID)  Interface
Platform
----------- ------ ------------------------- ----------------
----------------
node1-01/cdp
            e10a   cs1(FLMXXXXXXXX)          Ethernet1/16/3
N9K-C9332D-GX2B
            e10b   cs2(FDOXXXXXXXX)          Ethernet1/16/3
N9K-C9332D-GX2B
            e11a   cs1(FLMXXXXXXXX)          Ethernet1/16/4
N9K-C9332D-GX2B
            e11b   cs2(FDOXXXXXXXX)          Ethernet1/16/4
N9K-C9332D-GX2B
            e1a    cs1(FLMXXXXXXXX)          Ethernet1/16/1
N9K-C9332D-GX2B
            e1b    cs2(FDOXXXXXXXX)          Ethernet1/16/1
N9K-C9332D-GX2B
            .
            .
            .
            e7a    cs1(FLMXXXXXXXX)          Ethernet1/16/2
N9K-C9332D-GX2B
            e7b    cs2(FDOXXXXXXXX)          Ethernet1/16/2
N9K-C9332D-GX2B
.
.
.

cs1# show cdp neighbors

Capability Codes: R - Router, T - Trans-Bridge, B - Source-
Route-Bridge
                  S - Switch, H - Host, I - IGMP, r -
Repeater,
                  V - VoIP-Phone, D - Remotely-Managed-Device,
                  s - Supports-STP-Dispute

Device-ID             Local Intrfce  Hldtme Capability
Platform          Port ID
newcs2(FDOXXXXXXXX)   Eth1/31        179    R S I s     N9K-
C9364D-GX2A   Eth1/63
newcs2(FDOXXXXXXXX)   Eth1/32        179    R S I s     N9K-
C9364D-GX2A   Eth1/64
```

```
node1-01              Eth1/4/1       123    H           AFX-1K
e1a
node1-01              Eth1/4/2       123    H           AFX-1K
e7a
node1-01              Eth1/4/3       123    H           AFX-1K
e10a
node1-01              Eth1/4/4       123    H           AFX-1K
e11a
node1-02              Eth1/9/1       138    H           AFX-1K
e1a
node1-02              Eth1/9/2       138    H           AFX-1K
e7a
node1-02              Eth1/9/3       138    H           AFX-1K
e10a
node1-02              Eth1/9/4       138    H           AFX-1K
e11a
node1-03              Eth1/15/1      138    H           AFX-1K
e1a
node1-03              Eth1/15/2      138    H           AFX-1K
e7a
node1-03              Eth1/15/3      138    H           AFX-1K
e10a
node1-03              Eth1/15/4      138    H           AFX-1K
e11a
node1-04              Eth1/16/1      173    H           AFX-1K
e1a
node1-04              Eth1/16/2      173    H           AFX-1K
e7a
node1-04              Eth1/16/3      173    H           AFX-1K
e10a
node1-04              Eth1/16/4      173    H           AFX-1K
e11a

Total entries displayed: 18


newcs2# show cdp neighbors

Capability Codes: R - Router, T - Trans-Bridge, B - Source-
Route-Bridge
                  S - Switch, H - Host, I - IGMP, r -
Repeater,
                  V - VoIP-Phone, D - Remotely-Managed-Device,
                  s - Supports-STP-Dispute

Device-ID          Local Intrfce  Hldtme Capability  Platform
```

```
Port ID
cs1(FDOXXXXXXXX)   Eth1/31        179    R S I s     N9K-
C9364D-GX2A   Eth1/63
cs1(FDOXXXXXXXX)   Eth1/32        179    R S I s     N9K-
C9364D-GX2A   Eth1/64
node1-01           Eth1/4/1       123    H           AFX-1K
e1a
node1-01           Eth1/4/2       123    H           AFX-1K
e7a
node1-01           Eth1/4/3       123    H           AFX-1K
e10a
node1-01           Eth1/4/4       123    H           AFX-1K
e11a
node1-02           Eth1/9/1       138    H           AFX-1K
e1a
node1-02           Eth1/9/2       138    H           AFX-1K
e7a
node1-02           Eth1/9/3       138    H           AFX-1K
e10a
node1-02           Eth1/9/4       138    H           AFX-1K
e11a
node1-03           Eth1/15/1      138    H           AFX-1K
e1a
node1-03           Eth1/15/2      138    H           AFX-1K
e7a
node1-03           Eth1/15/3      138    H           AFX-1K
e10a
node1-03           Eth1/15/4      138    H           AFX-1K
e11a
node1-04           Eth1/16/1      173    H           AFX-1K
e1a
node1-04           Eth1/16/2      173    H           AFX-1K
e7a
node1-04           Eth1/16/3      173    H           AFX-1K
e10a
node1-04           Eth1/16/4      173    H           AFX-1K
e11a

Total entries displayed: 18
```

b. **HA ports**

i. Verify that all the HA ports are up with a healthy status:

```
ha interconnect status show -node <node-name>
```

Show example

```
cluster1::*> ha interconnect status show -node node1-01
  (system ha interconnect status show)

                        Node: node1-01
                Link 0 Status: up
                Link 1 Status: up
            Is Link 0 Active: true
            Is Link 1 Active: true
          IC RDMA Connection: up
                        Slot: 0
               Debug Firmware: no


Interconnect Port 0 :
                   Port Name: e1a-17
                         MTU: 4096
             Link Information: ACTIVE


Interconnect Port 1 :
                   Port Name: e1b-18
                         MTU: 4096
             Link Information: ACTIVE

cluster1::*> ha interconnect status show -node node1-02
  (system ha interconnect status show)

                        Node: node1-02
                Link 0 Status: up
                Link 1 Status: up
            Is Link 0 Active: true
            Is Link 1 Active: true
          IC RDMA Connection: up
                        Slot: 0
               Debug Firmware: no


Interconnect Port 0 :
                   Port Name: e1a-17
                         MTU: 4096
             Link Information: ACTIVE


Interconnect Port 1 :
```

```
                  Port Name: e1b-18
                        MTU: 4096
           Link Information: ACTIVE
.
.
.
```

c. **Storage ports**

i. Verify that all the storage ports are up with a healthy status:

```
storage port show -port-type ENET
```

Show example

```
cluster1::*> storage port show -port-type ENET


                                     Speed
Node                Port Type  Mode    (Gb/s) State    Status
------------------ ---- ----- ------- ------ --------
-----------
node1-01
                    e10a ENET  -          100 enabled  online
                    e10b ENET  -          100 enabled  online
                    e11a ENET  -          100 enabled  online
                    e11b ENET  -          100 enabled  online
node1-02
                    e10a ENET  -          100 enabled  online
                    e10b ENET  -          100 enabled  online
                    e11a ENET  -          100 enabled  online
                    e11b ENET  -          100 enabled  online
node1-03
                    e10a ENET  -          100 enabled  online
                    e10b ENET  -          100 enabled  online
                    e11a ENET  -          100 enabled  online
node1-04
                    e10a ENET  -          100 enabled  online
                    e10b ENET  -          100 enabled  online
                    e11a ENET  -          100 enabled  online
                    e11b ENET  -          100 enabled  online
16 entries were displayed.
```

d. **Storage shelf ports**

i. Verify that all the storage shelf ports are up with a healthy status:

```
storage shelf port show
```

Show example

```
cluster1::*> storage shelf port show

Shelf ID Module State        Internal?
-------- -- ------ ---------- ---------
1.1
         0 A      connected    false
         1 A      connected    false
         2 A      connected    false
         3 A      connected    false
         4 A      connected    false
         5 A      connected    false
         6 A      connected    false
         7 A      connected    false
         8 B      connected    false
         9 B      connected    false
        10 B      connected    false
        11 B      connected    false
        12 B      connected    false
        13 B      connected    false
        14 B      connected    false
        15 B      connected    false

16 entries were displayed.
```

ii. Verify the connection status of all the storage shelf ports:

```
storage shelf port show -fields remote-device,remote-
port,connector-state
```

Show example

```
cluster1::*> storage shelf port show -fields remote-
device,remote-port,connector-state

shelf id connector-state remote-port    remote-device
----- -- -------------- -------------- -----------------
1.1   0  connected       Ethernet1/17/1 CX9332D-cs1
1.1   1  connected       Ethernet1/15/1 CX9364D-cs1
1.1   2  connected       Ethernet1/17/2 CX9332D-cs1
1.1   3  connected       Ethernet1/15/2 CX9364D-cs1
1.1   4  connected       Ethernet1/17/3 CX9332D-cs1
1.1   5  connected       Ethernet1/15/3 CX9364D-cs1
1.1   6  connected       Ethernet1/17/4 CX9332D-cs1
1.1   7  connected       Ethernet1/15/4 CX9364D-cs1
1.1   8  connected       Ethernet1/19/1 CX9332D-cs1
1.1   9  connected       Ethernet1/17/1 CX9364D-cs1
1.1   10 connected       Ethernet1/19/2 CX9332D-cs1
1.1   11 connected       Ethernet1/17/2 CX9364D-cs1
1.1   12 connected       Ethernet1/19/3 CX9332D-cs1
1.1   13 connected       Ethernet1/17/3 CX9364D-cs1
1.1   14 connected       Ethernet1/19/4 CX9332D-cs1
1.1   15 connected       Ethernet1/17/4 CX9364D-cs1

16 entries were displayed.
```

2. If you suppressed automatic case creation, re-enable it by invoking an AutoSupport message:

```
system node autosupport invoke -node * -type all -message MAINT=END
```

What's next?

After you've replaced your switches, you configure switch health monitoring.

Cisco Nexus 9364D-GX2A

Get started

Installation and setup workflow for Cisco 9364D-GX2A switches

The Cisco 9364D-GX2A switch is part of the Cisco Nexus 9000 platform. AFX systems switches allow you to build ONTAP clusters with more than two nodes.

Follow these workflow steps to install and setup your to Cisco 9364D-GX2A switches.

1 Review the switch port details

Review the port details for the Cisco 9364D-GX2A switch.

2 Review the required documentation

Review specific switch and controller documentation to set up your 9364D-GX2A switches and the ONTAP cluster.

3 Review the Smart Call Home requirements

Review the requirements for the Cisco Smart Call Home feature, used to monitor the hardware and software components on your network.

4 Install the hardware

Install the switch hardware.

5 Configure the software

Configure the switch software.

Port details for Cisco Nexus 9364D-GX2A switches

The Cisco Nexus 9364D-GX2A switch is part of the Cisco Nexus 9000 platform and can be installed in a NetApp system cabinet. 9364D-GX2A switches allow you to build ONTAP clusters with more than two nodes.

Cisco Nexus 9364D-GX2A port details

Ports	Description
Ethernet1/1/1-4 to Ethernet1/62/1-4	4x100GbE mode for cluster, HA, amd storage connections
Ethernet1/63, Ethernet1/64	400GbE ISL

See the Hardware Universe for details of ports used by the platform.

Documentation requirements for Cisco Nexus 9364D-GX2A switches

For Cisco Nexus 9364D-GX2A switch installation and maintenance, be sure to review specific switch and controller documentation to set up your Cisco 9364D-GX2A switches and ONTAP cluster.

Switch documentation

To set up the Cisco Nexus 9364D-GX2A switches, you need the following documentation from the Cisco

Nexus 9000 Series Switches Support page:

Document title	Description
Cisco Nexus 9364D-GX2A NX-OS Mode Switch Hardware Installation Guide	Provides detailed information about site requirements, switch hardware details, and installation options.
Cisco Nexus 9000 Series Switch Software Configuration Guides (choose the guide for the NX-OS release installed on your switches)	Provides initial switch configuration information that you need before you can configure the switch for ONTAP operation.
Cisco Nexus 9000 Series NX-OS Software Upgrade and Downgrade Guide (choose the guide for the NX-OS release installed on your switches)	Provides information on how to downgrade the switch to ONTAP supported switch software, if necessary.
Cisco Nexus 9000 Series NX-OS Command Reference	Provides links to the various command references provided by Cisco.
Cisco Nexus 9000 Series NX-OS System Message Reference	Describes the system messages for Cisco Nexus 9000 series switches, those that are informational, and others that might help diagnose problems with links, internal hardware, or the system software.
Cisco Nexus 9000 Series NX-OS Release Notes (choose the notes for the NX-OS release installed on your switches)	Describes the features, bugs, and limitations for the Cisco Nexus 9000 Series.
Regulatory Compliance and Safety Information for Cisco Nexus 9000 Series	Provides international agency compliance, safety, and statutory information for the Nexus 9000 series switches.

ONTAP systems documentation

To set up an ONTAP system, you need the following documents for your version of the operating system from the ONTAP 9 Documentation Center.

Name	Description
AFX systems documentation	Describes how to install NetApp hardware.
ONTAP documentation	Provides detailed information about all aspects of the ONTAP releases.
Hardware Universe	Provides NetApp hardware configuration and compatibility information.

Smart Call Home requirements

To use Smart Call Home, you must configure a cluster network switch to communicate using email with the Smart Call Home system. In addition, you can optionally set up your cluster network switch to take advantage of Cisco's embedded Smart Call Home support feature.

Smart Call Home monitors the hardware and software components on your network. When a critical system configuration occurs, it generates an email-based notification and raises an alert to all the recipients that are configured in your destination profile.

Smart Call Home monitors the hardware and software components on your network. When a critical system configuration occurs, it generates an email-based notification and raises an alert to all the recipients that are configured in your destination profile.

Before you can use Smart Call Home, be aware of the following requirements:

- An email server must be in place.
- The switch must have IP connectivity to the email server.
- The contact name (SNMP server contact), phone number, and street address information must be configured. This is required to determine the origin of messages received.
- A CCO ID must be associated with an appropriate Cisco SMARTnet Service contract for your company.
- Cisco SMARTnet Service must be in place for the device to be registered.

The Cisco support site contains information about the commands to configure Smart Call Home.

Install hardware

Go to the AFX install and setup workflow to learn how to install and setup the switch hardware and controller hardware for your system.

The AFX install and setup documentation includes information such as:

- Instructions for getting the site ready, unpacking the boxes and comparing the contents of the boxes to the packing slip, and registering the system to access support benefits.
- Instructions for installing the switches, controllers, and storage shelf in a NetApp cabinet or telco rack.
- Instructions for cabling your system, including cabling the controller storage to switch connections and cabling the shelf to switch connections.

Configure software

Configure software workflow for Cisco 9364D-GX2A switches

To install and configure the software for a Cisco 9364D-GX2A switch and to install or upgrade the Reference Configuration File (RCF), follow these steps:

1. **Configure the 9364D-GX2A switch**

Configure the Cisco 9364D-GX2A switch.

2 Prepare to install the NX-OS software and RCF

Install the Cisco NX-OS software and reference configuration files (RCFs) on the Cisco 9364D-GX2A switches.

3 Install or upgrade the NX-OS software

Download and install or upgrade the NX-OS software on the Cisco 9364D-GX2A switch.

4 Install or upgrade the RCF

Install or upgrade the RCF after setting up the Cisco 9364D-GX2A switch for the first time. You can also use this procedure to upgrade your RCF version.

5 Verify SSH is enabled on the Nexus 9364D-GX2A switches

Verify that SSH is enabled on the Cisco 9364D-GX2A switch for use with the Ethernet Switch Health Monitor (CSHM) and log collection features.

6 Reset the switch to factory defaults

Erase the Cisco 9364D-GX2A switch settings.

Once you have finished configuring your switches, go to Power on your AFX 1K storage system.

Configure the 9364D-GX2A switch

Follow this procedure to configure the Cisco Nexus 9364D-GX2A switch.

Before you begin

Make sure you have:

- Powered on your switches.
- Access to an HTTP, FTP, or TFTP server at the installation site to download the applicable NX-OS and Reference Configuration File (RCF) releases.
- Applicable NX-OS version, downloaded from the Cisco software download page.

> - NX-OS 10.4.2 is the only supported version for Cisco Nexus 9364D-GX2A switches in an ONTAP cluster.
> - Do not upgrade or downgrade your NX-OS version to an unsupported version; only 10.4.2 is currently supported.

- Applicable licenses, network and configuration information, and cables.
- Applicable NetApp cluster network and management network RCFs downloaded from the NetApp Support Site at mysupport.netapp.com. All Cisco cluster network and management network switches arrive with the standard Cisco factory-default configuration. These switches also have the current version of the NX-OS software but do not have the RCFs loaded.

- Required switch and ONTAP documentation.

Steps

1. Perform an initial configuration of the cluster network switches.

   Provide applicable responses to the following initial setup questions when you first boot the switch. Your site's security policy defines the responses and services to enable.

Prompt	Response
Abort Auto Provisioning and continue with normal setup? (yes/no)	Respond with **yes**. The default is no.
Do you want to enforce secure password standard? (yes/no)	Respond with **yes**. The default is yes.
Enter the password for admin.	The default password is "admin"; you must create a new, strong password. A weak password can be rejected.
Would you like to enter the basic configuration dialog? (yes/no)	Respond with **yes** at the initial configuration of the switch.
Create another login account? (yes/no)	Your answer depends on your site's policies on alternate administrators. The default is **no**.
Configure read-only SNMP community string? (yes/no)	Respond with **no**. The default is no.
Configure read-write SNMP community string? (yes/no)	Respond with **no**. The default is no.
Enter the switch name.	Enter the switch name, which is limited to 63 alphanumeric characters.
Continue with Out-of-band (mgmt0) management configuration? (yes/no)	Respond with **yes** (the default) at that prompt. At the mgmt0 IPv4 address: prompt, enter your IP address: ip_address.
Configure the default-gateway? (yes/no)	Respond with **yes**. At the IPv4 address of the default-gateway: prompt, enter your default_gateway.
Configure advanced IP options? (yes/no)	Respond with **no**. The default is no.
Enable the telnet service? (yes/no)	Respond with **no**. The default is no.

Prompt	Response
Enabled SSH service? (yes/no)	Respond with **yes**. The default is yes. SSH is recommended when using Ethernet Switch Health Monitor (CSHM) for its log collection features. SSHv2 is also recommended for enhanced security.
Enter the type of SSH key you want to generate (dsa/rsa/rsa1).	The default is **rsa**.
Enter the number of key bits (1024-2048).	Enter the number of key bits from 1024 to 2048.
Configure the NTP server? (yes/no)	Respond with **no**. The default is no.
Configure default interface layer (L3/L2)	Respond with **L2**. The default is L2.
Configure default switch port interface state (shut/noshut)	Respond with **noshut**. The default is noshut.
Configure CoPP system profile (strict/moderate/lenient/dense)	Respond with **strict**. The default is strict.
Would you like to edit the configuration? (yes/no)	You should see the new configuration at this point. Review and make any necessary changes to the configuration you just entered. Respond with **no** at the prompt if you are satisfied with the configuration. Respond with **yes** if you want to edit your configuration settings.
Use this configuration and save it? (yes/no)	Respond with **yes** to save the configuration. This automatically updates the kickstart and system images. If you do not save the configuration at this stage, none of the changes will be in effect the next time you reboot the switch.

2. Verify the configuration choices you made in the display that appears at the end of the setup, and make sure that you save the configuration.
3. Check the version on the cluster network switches, and if necessary, download the NetApp-supported version of the software to the switches from the Cisco software download page.

What's next?

After you've configured your switches, you prepare to install NX-OS and RCF.

Prepare to install NX-OS software and RCF

Before you install the NX-OS software and the Reference Configuration File (RCF), follow this procedure.

About the examples

The examples in this procedure use the following switch and node nomenclature:

- The names of the two Cisco switches are cs1 and cs2.
- The node names are node1-01, node1-02, node1-03, and node1-04.
- The cluster LIF names are:
  - node1-01_clus1 and node1-01_clus2 for node1-01
  - node1-02_clus1 and node1-02_clus2 for node1-02
  - node1-03_clus1 and node1-03_clus2 for node1-03
  - node1-04_clus1 and node1-04_clus2 for node1-04
- The `cluster1::*>` prompt indicates the name of the cluster.

About this task

The procedure requires the use of both ONTAP commands and Cisco Nexus 9000 Series Switches commands; ONTAP commands are used unless otherwise indicated.

Steps

1. If AutoSupport is enabled on this cluster, suppress automatic case creation by invoking an AutoSupport message: `system node autosupport invoke -node * -type all -message MAINT=x h`

   where x is the duration of the maintenance window in hours.

   > The AutoSupport message notifies technical support of this maintenance task so that automatic case creation is suppressed during the maintenance window.

2. Change the privilege level to advanced, entering **y** when prompted to continue:

   ```
   set -privilege advanced
   ```

   The advanced prompt (`*>`) appears.

3. Check the administrative and operational status of each port.
   a. **Cluster ports**
      i. Display how many cluster interconnect interfaces are configured in each node for each cluster interconnect switch:

      ```
      network device-discovery show -protocol cdp
      ```

Show example

```
cluster1::*> network device-discovery show -protocol cdp
Node/       Local  Discovered
Protocol    Port   Device (LLDP: ChassisID) Interface
Platform
----------- ------ ----------------------- ----------------
----------------
node1-02/cdp
            e10a   cs1(FLMXXXXXXXX)         Ethernet1/16/3
N9K-C9364D-GX2A
            e10b   cs2(FDOXXXXXXXX)         Ethernet1/13/3
N9K-C9364D-GX2A
            e11a   cs1(FLMXXXXXXXX)         Ethernet1/16/4
N9K-C9364D-GX2A
            e11b   cs2(FDOXXXXXXXX)         Ethernet1/13/4
N9K-C9364D-GX2A
            e1a    cs1(FLMXXXXXXXX)         Ethernet1/16/1
N9K-C9364D-GX2A
            e1b    cs2(FDOXXXXXXXX)         Ethernet1/13/1
N9K-C9364D-GX2A
            .
            .
            .
            e7a    cs1(FLMXXXXXXXX)         Ethernet1/16/2
N9K-C9364D-GX2A
            e7b    cs2(FDOXXXXXXXX)         Ethernet1/13/2
N9K-C9364D-GX2A

node1-01/cdp
            e10a   cs1(FLMXXXXXXXX)         Ethernet1/16/3
N9K-C9364D-GX2A
            e10b   cs2(FDOXXXXXXXX)         Ethernet1/13/3
N9K-C9364D-GX2A
            e11a   cs1(FLMXXXXXXXX)         Ethernet1/16/4
N9K-C9364D-GX2A
            e11b   cs2(FDOXXXXXXXX)         Ethernet1/13/4
N9K-C9364D-GX2A
            e1a    cs1(FLMXXXXXXXX)         Ethernet1/16/1
N9K-C9364D-GX2A
            e1b    cs2(FDOXXXXXXXX)         Ethernet1/13/1
N9K-C9364D-GX2A
            .
            .
            .
            e7a    cs1(FLMXXXXXXXX)         Ethernet1/16/2
```

```
N9K-C9364D-GX2A
            e7b    cs2(FDOXXXXXXXX)         Ethernet1/13/2
N9K-C9364D-GX2A
.
.
.
```

ii. Display the network port attributes:

```
network port show -ipspace Cluster
```

Show example

```
cluster1::*> network port show -ipspace Cluster

Node: node1-01

Ignore
                                                  Speed(Mbps)
Health   Health
Port      IPspace      Broadcast Domain Link MTU  Admin/Oper
Status   Status
--------- ------------ ---------------- ---- ---- -----------
-------- ------
e7a       Cluster      Cluster          up   9000  auto/100000
healthy false
e7b       Cluster      Cluster          up   9000  auto/100000
healthy false


Node: node1-02

Ignore
                                                  Speed(Mbps)
Health   Health
Port      IPspace      Broadcast Domain Link MTU  Admin/Oper
Status   Status
--------- ------------ ---------------- ---- ---- -----------
-------- ------
e7a       Cluster      Cluster          up   9000  auto/100000
healthy false
e7b       Cluster      Cluster          up   9000  auto/100000
healthy false


Node: node1-03

Ignore
                                                  Speed(Mbps)
Health   Health
Port      IPspace      Broadcast Domain Link MTU  Admin/Oper
Status   Status
--------- ------------ ---------------- ---- ---- -----------
-------- ------
e7a       Cluster      Cluster          up   9000  auto/100000
healthy false
e7b       Cluster      Cluster          up   9000  auto/100000
```

```
healthy false


Node: node1-04

Ignore
                                                          Speed(Mbps)
Health   Health
Port      IPspace      Broadcast Domain Link MTU  Admin/Oper
Status   Status
--------- ------------ ---------------- ---- ---- -----------
-------- ------
e7a       Cluster      Cluster          up   9000  auto/100000
healthy false
e7b       Cluster      Cluster          up   9000  auto/100000
healthy false

8 entries were displayed.
```

iii. Display information about the cluster LIFs:

```
network interface show -vserver Cluster
```

Show example

```
cluster1::*> network interface show -vserver Cluster

            Logical       Status     Network
Current   Current Is
Vserver     Interface     Admin/Oper Address/Mask       Node
Port    Home
----------- ------------ ---------- ------------------
--------- ------- ----
Cluster
            node1-01_clus1 up/up     169.254.36.44/16   node1-
01  e7a     true
            node1-01_clus2 up/up     169.254.7.5/16     node1-
01  e7b     true
            node1-02_clus1 up/up     169.254.197.206/16 node1-
02  e7a     true
            node1-02_clus2 up/up     169.254.195.186/16 node1-
02  e7b     true
            node1-03_clus1 up/up     169.254.192.49/16  node1-
03  e7a     true
            node1-03_clus2 up/up     169.254.182.76/16  node1-
03  e7b     true
            node1-04_clus1 up/up     169.254.59.49/16   node1-
04  e7a     true
            node1-04_clus2 up/up     169.254.62.244/16  node1-
04  e7b     true

8 entries were displayed.
```

b. **HA ports**

   i. Display information about the HA ports:

   ```
   ha interconnect status show -node <node-name>
   ```

Show example

```
cluster1::*> ha interconnect status show -node node1-01
  (system ha interconnect status show)

                        Node: node1-01
                Link 0 Status: up
                Link 1 Status: up
            Is Link 0 Active: true
            Is Link 1 Active: true
          IC RDMA Connection: up
                        Slot: 0
               Debug Firmware: no


Interconnect Port 0 :
                   Port Name: e1a-17
                         MTU: 4096
             Link Information: ACTIVE


Interconnect Port 1 :
                   Port Name: e1b-18
                         MTU: 4096
             Link Information: ACTIVE

cluster1::*> ha interconnect status show -node node1-02
  (system ha interconnect status show)

                        Node: node1-02
                Link 0 Status: up
                Link 1 Status: up
            Is Link 0 Active: true
            Is Link 1 Active: true
          IC RDMA Connection: up
                        Slot: 0
               Debug Firmware: no


Interconnect Port 0 :
                   Port Name: e1a-17
                         MTU: 4096
             Link Information: ACTIVE


Interconnect Port 1 :
```

```
                  Port Name: e1b-18
                        MTU: 4096
           Link Information: ACTIVE
.
.
.
```

c. **Storage ports**

i. Display information about the storage ports:

```
storage port show -port-type ENET
```

Show example

```
cluster1::*> storage port show -port-type ENET

                                     Speed
Node                Port Type  Mode    (Gb/s) State    Status
------------------ ---- ----- ------- ------ --------
-----------
node1-01
                    e10a ENET  -          100 enabled  online
                    e10b ENET  -          100 enabled  online
                    e11a ENET  -          100 enabled  online
                    e11b ENET  -          100 enabled  online
node1-02
                    e10a ENET  -          100 enabled  online
                    e10b ENET  -          100 enabled  online
                    e11a ENET  -          100 enabled  online
                    e11b ENET  -          100 enabled  online
node1-03
                    e10a ENET  -          100 enabled  online
                    e10b ENET  -          100 enabled  online
                    e11a ENET  -          100 enabled  online
node1-04
                    e10a ENET  -          100 enabled  online
                    e10b ENET  -          100 enabled  online
                    e11a ENET  -          100 enabled  online
                    e11b ENET  -          100 enabled  online
16 entries were displayed.
```

d. **Storage shelf ports**

i. Verify that all the storage shelf ports are up with a healthy status:

```
storage shelf port show
```

Show example

```
cluster1::*> storage shelf port show

Shelf ID Module State        Internal?
-------- -- ------ ---------- ---------
1.1
         0 A      connected    false
         1 A      connected    false
         2 A      connected    false
         3 A      connected    false
         4 A      connected    false
         5 A      connected    false
         6 A      connected    false
         7 A      connected    false
         8 B      connected    false
         9 B      connected    false
        10 B      connected    false
        11 B      connected    false
        12 B      connected    false
        13 B      connected    false
        14 B      connected    false
        15 B      connected    false

16 entries were displayed.
```

ii. Verify the connection status of all the storage shelf ports:

```
storage shelf port show -fields remote-device,remote-
port,connector-state
```

Show example

```
cluster1::*> storage shelf port show -fields remote-
device,remote-port,connector-state

shelf id connector-state remote-port    remote-device
----- -- -------------- -------------- -----------------
1.1   0  connected       Ethernet1/17/1 CX9332D-cs1
1.1   1  connected       Ethernet1/15/1 CX9364D-cs1
1.1   2  connected       Ethernet1/17/2 CX9332D-cs1
1.1   3  connected       Ethernet1/15/2 CX9364D-cs1
1.1   4  connected       Ethernet1/17/3 CX9332D-cs1
1.1   5  connected       Ethernet1/15/3 CX9364D-cs1
1.1   6  connected       Ethernet1/17/4 CX9332D-cs1
1.1   7  connected       Ethernet1/15/4 CX9364D-cs1
1.1   8  connected       Ethernet1/19/1 CX9332D-cs1
1.1   9  connected       Ethernet1/17/1 CX9364D-cs1
1.1   10 connected       Ethernet1/19/2 CX9332D-cs1
1.1   11 connected       Ethernet1/17/2 CX9364D-cs1
1.1   12 connected       Ethernet1/19/3 CX9332D-cs1
1.1   13 connected       Ethernet1/17/3 CX9364D-cs1
1.1   14 connected       Ethernet1/19/4 CX9332D-cs1
1.1   15 connected       Ethernet1/17/4 CX9364D-cs1

16 entries were displayed.
```

4. Verify the connectivity of the remote cluster interfaces.

   a. You can use the `network interface check cluster-connectivity show` command to display the details of an accessibility check for cluster connectivity:

   ```
   network interface check cluster-connectivity show
   ```

Show example

```
cluster1::*> network interface check cluster-connectivity show

                                  Source           Destination
Packet
Node   Date                       LIF              LIF
Loss
------ -------------------------- ---------------
-------------- -----------
node1-01
       6/4/2025 03:13:33 -04:00   node1-01_clus2  node1-02_clus1
none
       6/4/2025 03:13:34 -04:00   node1-01_clus2  node1-02_clus1
none


node1-02
       6/4/2025 03:13:33 -04:00   node1-02_clus2  node1-01_clus1
none
       6/4/2025 03:13:34 -04:00   node1-02_clus2  node1-01_clus2
none
.
.
.
```

b. Alternatively, you can use the `cluster ping-cluster -node <node-name>` command to check the connectivity:

```
cluster ping-cluster -node <node-name>
```

Show example

```
cluster1::*> cluster ping-cluster -node local
Host is node1-04
Getting addresses from network interface table...
Cluster node1-01_clus1 169.254.36.44 node1-01 e7a
Cluster node1-01_clus2 169.254.7.5   node1-01 e7b
Cluster node1-02_clus1 169.254.197.206 node1-02 e7a
Cluster node1-02_clus2 169.254.195.186 node1-02 e7b
Cluster node1-03_clus1 169.254.192.49 node1-03 e7a
Cluster node1-03_clus2 169.254.182.76 node1-03 e7b
Cluster node1-04_clus1 169.254.59.49 node1-04 e7a
Cluster node1-04_clus2 169.254.62.244 node1-04 e7b
Local = 169.254.59.49 169.254.62.244
Remote = 169.254.36.44 169.254.7.5 169.254.197.206
169.254.195.186 169.254.192.49 169.254.182.76
Cluster Vserver Id = 4294967293
Ping status:
............
Basic connectivity succeeds on 12 path(s)
Basic connectivity fails on 0 path(s)
................................................
Detected 9000 byte MTU on 12 path(s):
    Local 169.254.59.49 to Remote 169.254.182.76
    Local 169.254.59.49 to Remote 169.254.192.49
    Local 169.254.59.49 to Remote 169.254.195.186
    Local 169.254.59.49 to Remote 169.254.197.206
    Local 169.254.59.49 to Remote 169.254.36.44
    Local 169.254.59.49 to Remote 169.254.7.5
    Local 169.254.62.244 to Remote 169.254.182.76
    Local 169.254.62.244 to Remote 169.254.192.49
    Local 169.254.62.244 to Remote 169.254.195.186
    Local 169.254.62.244 to Remote 169.254.197.206
    Local 169.254.62.244 to Remote 169.254.36.44
    Local 169.254.62.244 to Remote 169.254.7.5
Larger than PMTU communication succeeds on 12 path(s)
RPC status:
6 paths up, 0 paths down (tcp check)
6 paths up, 0 paths down (udp check)
```

5. Verify that the auto-revert command is enabled on all cluster LIFs:

```
network interface show -vserver Cluster -fields auto-revert
```

Show example

```
cluster1::*> network interface show -vserver Cluster -fields auto-
revert
        Logical
Vserver Interface          Auto-revert
------- ------------------ -----------
Cluster node1-01_clus1     true
Cluster node1-01_clus2     true
Cluster node1-02_clus1     true
Cluster node1-02_clus2     true
Cluster node1-03_clus1     true
Cluster node1-03_clus2     true
Cluster node1-04_clus1     true
Cluster node1-04_clus2     true

8 entries were displayed.
```

What's next?

After you've prepared to install the NX-OS software and RCF, you install or upgrade the NX-OS software.

Install or upgrade the NX-OS software

Follow this procedure to install or upgrade the NX-OS software on the Nexus 9364D-GX2A switch.

Review requirements

Before you begin

Verify the following:

- Complete the procedure in Prepare to install NX-OS and RCF.
- A current backup of the switch configuration is available.
- A fully functioning cluster (no errors in the logs or similar issues) is in place.

Suggested documentation

- Cisco Ethernet switch page

  Consult the switch compatibility table for the supported ONTAP and NX-OS versions.

- Software Upgrade and downgrade guides

  Refer to the appropriate software and upgrade guides available on the Cisco website for complete documentation on the Cisco switch upgrade and downgrade procedures.

- Cisco Nexus 9000 and 3000 Upgrade and ISSU Matrix

Provides information on Disruptive Upgrade/Downgrade for Cisco NX-OS software on Nexus 9000 Series Switches
based on your current and target releases.

On the page, select **Disruptive Upgrade** and select your current release and target release from the dropdown list.

About the examples

The examples in this procedure use the following switch and node nomenclature:

- The names of the two Cisco switches are cs1 and cs2.
- The node names are node1-01, node1-02, node1-03, and node1-04.
- The cluster LIF names are node1-01_clus1, node1-01_clus2, node1-02_clus1, node1-02_clus2, node1-03_clus1, node1-03_clus2, node1-04_clus1, and node1-04_clus2.
- The `cluster1::*>` prompt indicates the name of the cluster.

Install the software

The procedure requires the use of both ONTAP commands and Cisco Nexus 9000 Series Switches commands; ONTAP commands are used unless otherwise indicated.

- NX-OS 10.4.2 is the only supported version for Cisco Nexus 9364D-GX2A switches in an ONTAP cluster.
- Do not upgrade or downgrade your NX-OS version to an unsupported version; only 10.4.2 is currently supported.

Steps

1. Connect the switch to the management network.
2. Use the ping command to verify connectivity to the server hosting the NX-OS software and the RCF.

   Show example

   This example verifies that the switch can reach the server at IP address 172.19.2.1:

   ```
   cs2# ping 172.19.2.1
   Pinging 172.19.2.1 with 0 bytes of data:

   Reply From 172.19.2.1: icmp_seq = 0. time= 5910 usec.
   ```

3. Display the cluster ports on each node that are connected to the cluster switches:

   ```
   network device-discovery show
   ```

Show example

```
cluster1::*> network device-discovery show

Node/       Local  Discovered
Protocol    Port   Device (LLDP: ChassisID) Interface
Platform
----------- ------ ----------------------- ----------------
----------------
node1-01/cdp
            e10a   cs1(FLMXXXXXXXX)         Ethernet1/16/3    N9K-
C9364D-GX2A
            e10b   cs2(FDOXXXXXXXX)         Ethernet1/13/3    N9K-
C9364D-GX2A
            e11a   cs1(FLMXXXXXXXX)         Ethernet1/16/4    N9K-
C9364D-GX2A
            e11b   cs2(FDOXXXXXXXX)         Ethernet1/13/4    N9K-
C9364D-GX2A
            e1a    cs1(FLMXXXXXXXX)         Ethernet1/16/1    N9K-
C9364D-GX2A
            e1b    cs2(FDOXXXXXXXX)         Ethernet1/13/1    N9K-
C9364D-GX2A
            .
            .
            .

            e7a    cs1(FLMXXXXXXXX)         Ethernet1/16/2    N9K-
C9364D-GX2A
            e7b    cs2(FDOXXXXXXXX)         Ethernet1/13/2    N9K-
C9364D-GX2A

node1-01/lldp
            e10a   cs1 (c8:60:8f:xx:xx:xx)  Ethernet1/16/3    -
            e10b   cs2 (04:e3:87:xx:xx:xx)  Ethernet1/13/3    -
            e11a   cs1 (c8:60:8f:xx:xx:xx)  Ethernet1/16/4    -
            e11b   cs2 (04:e3:87:xx:xx:xx)  Ethernet1/13/4    -
            e1a    cs1 (c8:60:8f:xx:xx:xx)  Ethernet1/16/1    -
            e1b    cs2 (04:e3:87:xx:xx:xx)  Ethernet1/13/1    -
            .
            .
            .
            e7a    cs1 (c8:60:8f:xx:xx:xx)  Ethernet1/16/2    -
            e7b    cs2 (04:e3:87:xx:xx:xx)  Ethernet1/13/2    -
.
.
.
```

4. Check the administrative and operational status of each port.
    a. **Cluster ports**
        i. Verify that all the cluster ports are up with a healthy status:

```
network port show -ipspace Cluster
```

Show example

```
cluster1::*> network port show -ipspace Cluster

Node: node1-01

Ignore
                                                  Speed(Mbps)
Health   Health
Port      IPspace      Broadcast Domain Link MTU  Admin/Oper
Status   Status
--------- ------------ ---------------- ---- ---- -----------
-------- ------
e7a       Cluster      Cluster          up   9000  auto/100000
healthy false
e7b       Cluster      Cluster          up   9000  auto/100000
healthy false

Node: node1-02

Ignore
                                                  Speed(Mbps)
Health   Health
Port      IPspace      Broadcast Domain Link MTU  Admin/Oper
Status   Status
--------- ------------ ---------------- ---- ---- -----------
-------- ------
e7a       Cluster      Cluster          up   9000  auto/100000
healthy false
e7b       Cluster      Cluster          up   9000  auto/100000
healthy false

Node: node1-03


Ignore
                                                  Speed(Mbps)
Health   Health
Port      IPspace      Broadcast Domain Link MTU  Admin/Oper
Status   Status
--------- ------------ ---------------- ---- ---- -----------
-------- ------
e7a       Cluster      Cluster          up   9000  auto/10000
healthy  false
e7b       Cluster      Cluster          up   9000  auto/10000
healthy  false
```

```
Node: node1-04

Ignore
                                                            Speed(Mbps)
Health   Health
Port      IPspace      Broadcast Domain Link MTU  Admin/Oper
Status   Status
--------- ------------ ---------------- ---- ---- -----------
-------- ------
e7a       Cluster      Cluster          up   9000  auto/10000
healthy  false
e7b       Cluster      Cluster          up   9000  auto/10000
healthy  false
```

ii. Verify that all the cluster interfaces (LIFs) are on the home port:

```
network interface show -role cluster
```

Show example

```
cluster1::*> network interface show -role cluster

            Logical         Status     Network
Current   Current Is
Vserver     Interface       Admin/Oper Address/Mask       Node
Port    Home
----------- --------------- ---------- ------------------
--------- ------- ----
Cluster
            node1-01_clus1  up/up      169.254.36.44/16
node1-01  e7a     true
            node1-01_clus2  up/up      169.254.7.5/16
node1-01  e7b     true
            node1-02_clus1  up/up      169.254.197.206/16
node1-02  e7a     true
            node1-02_clus2  up/up      169.254.195.186/16
node1-02  e7b     true
            node1-03_clus1  up/up      169.254.192.49/16
node1-03  e7a     true
            node1-03_clus2  up/up      169.254.182.76/16
node1-03  e7b     true
            node1-04_clus1  up/up      169.254.59.49/16
node1-04  e7a     true
            node1-04_clus2  up/up      169.254.62.244/16
node1-04  e7b     true

8 entries were displayed.
```

iii. Verify that the cluster displays information for both cluster switches:

```
system cluster-switch show -is-monitoring-enabled-operational true
```

Show example

```
cluster1::*> system cluster-switch show -is-monitoring-enabled
-operational true

Switch                      Type               Address
Model
--------------------------- ------------------
---------------- ---------------
cs2(FDOXXXXXXXX)            cluster-network    10.228.137.233
N9K-C9364D-GX2A
     Serial Number: FDOXXXXXXXX
      Is Monitored: true
            Reason: None
  Software Version: Cisco Nexus Operating System (NX-OS)
Software, Version
                    10.4(2)
    Version Source: CDP/ISDP


cs1(FLMXXXXXXXX)             cluster-network   10.228.137.253
N9K-C9364D-GX2A
     Serial Number: FLMXXXXXXXX
      Is Monitored: true
            Reason: None
  Software Version: Cisco Nexus Operating System (NX-OS)
Software, Version
                    10.4(2)
    Version Source: CDP/ISDP

2 entries were displayed.
```

b. **HA ports**

i. Verify that all the HA ports are up with a healthy status:

```
ha interconnect status show -node <node-name>
```

Show example

```
cluster1::*> ha interconnect status show -node node1-01
  (system ha interconnect status show)

                        Node: node1-01
                Link 0 Status: up
                Link 1 Status: up
            Is Link 0 Active: true
            Is Link 1 Active: true
          IC RDMA Connection: up
                        Slot: 0
               Debug Firmware: no


Interconnect Port 0 :
                   Port Name: e1a-17
                         MTU: 4096
             Link Information: ACTIVE


Interconnect Port 1 :
                   Port Name: e1b-18
                         MTU: 4096
             Link Information: ACTIVE

cluster1::*> ha interconnect status show -node node1-02
  (system ha interconnect status show)

                        Node: node1-02
                Link 0 Status: up
                Link 1 Status: up
            Is Link 0 Active: true
            Is Link 1 Active: true
          IC RDMA Connection: up
                        Slot: 0
               Debug Firmware: no


Interconnect Port 0 :
                   Port Name: e1a-17
                         MTU: 4096
             Link Information: ACTIVE


Interconnect Port 1 :
```

```
                  Port Name: e1b-18
                        MTU: 4096
           Link Information: ACTIVE
.
.
.
```

c. **Storage ports**

i. Verify that all the storage ports are up with a healthy status:

```
storage port show -port-type ENET
```

Show example

```
cluster1::*> storage port show -port-type ENET

                                     Speed
Node                Port Type  Mode    (Gb/s) State    Status
------------------ ---- ----- ------- ------ --------
-----------
node1-01
                    e10a ENET  -          100 enabled  online
                    e10b ENET  -          100 enabled  online
                    e11a ENET  -          100 enabled  online
                    e11b ENET  -          100 enabled  online
node1-02
                    e10a ENET  -          100 enabled  online
                    e10b ENET  -          100 enabled  online
                    e11a ENET  -          100 enabled  online
                    e11b ENET  -          100 enabled  online
node1-03
                    e10a ENET  -          100 enabled  online
                    e10b ENET  -          100 enabled  online
                    e11a ENET  -          100 enabled  online
node1-04
                    e10a ENET  -          100 enabled  online
                    e10b ENET  -          100 enabled  online
                    e11a ENET  -          100 enabled  online
                    e11b ENET  -          100 enabled  online
16 entries were displayed.
```

d. **Storage shelf ports**

i. Verify that all the storage shelf ports are up with a healthy status:

```
storage shelf port show
```

Show example

```
cluster1::*> storage shelf port show

Shelf ID Module State        Internal?
-------- -- ------ ---------- ---------
1.1
         0 A      connected    false
         1 A      connected    false
         2 A      connected    false
         3 A      connected    false
         4 A      connected    false
         5 A      connected    false
         6 A      connected    false
         7 A      connected    false
         8 B      connected    false
         9 B      connected    false
        10 B      connected    false
        11 B      connected    false
        12 B      connected    false
        13 B      connected    false
        14 B      connected    false
        15 B      connected    false

16 entries were displayed.
```

ii. Verify the connection status of all the storage shelf ports:

```
storage shelf port show -fields remote-device,remote-
port,connector-state
```

Show example

```
cluster1::*> storage shelf port show -fields remote-
device,remote-port,connector-state

shelf id connector-state remote-port    remote-device
----- -- -------------- -------------- -----------------
1.1   0  connected       Ethernet1/17/1 CX9332D-cs1
1.1   1  connected       Ethernet1/15/1 CX9364D-cs1
1.1   2  connected       Ethernet1/17/2 CX9332D-cs1
1.1   3  connected       Ethernet1/15/2 CX9364D-cs1
1.1   4  connected       Ethernet1/17/3 CX9332D-cs1
1.1   5  connected       Ethernet1/15/3 CX9364D-cs1
1.1   6  connected       Ethernet1/17/4 CX9332D-cs1
1.1   7  connected       Ethernet1/15/4 CX9364D-cs1
1.1   8  connected       Ethernet1/19/1 CX9332D-cs1
1.1   9  connected       Ethernet1/17/1 CX9364D-cs1
1.1   10 connected       Ethernet1/19/2 CX9332D-cs1
1.1   11 connected       Ethernet1/17/2 CX9364D-cs1
1.1   12 connected       Ethernet1/19/3 CX9332D-cs1
1.1   13 connected       Ethernet1/17/3 CX9364D-cs1
1.1   14 connected       Ethernet1/19/4 CX9332D-cs1
1.1   15 connected       Ethernet1/17/4 CX9364D-cs1

16 entries were displayed.
```

5. Disable auto-revert on the cluster LIFs. The cluster LIFs fail over to the partner cluster switch and remain there as you perform the upgrade procedure on the targeted switch:

   ```
   network interface modify -vserver Cluster -lif * -auto-revert false
   ```

6. Copy the NX-OS software and EPLD images to the Nexus 9364D-GX2A switch.

Show example

```
cs2# copy sftp: bootflash: vrf management
Enter source filename: /code/nxos.10.4.2.bin
Enter hostname for the sftp server: 172.19.2.1
Enter username: root

Outbound-ReKey for 172.19.2.1:22
Inbound-ReKey for 172.19.2.1:22
root@172.19.2.1's password:
sftp> progress
Progress meter enabled
sftp> get   /code/nxos.10.4.2.bin  /bootflash/nxos.10.4.2.bin
/code/nxos.10.4.2.bin  100% 1261MB   9.3MB/s   02:15
sftp> exit
Copy complete, now saving to disk (please wait)...
Copy complete.

cs2# copy sftp: bootflash: vrf management
Enter source filename: /code/n9000-epld.10.4.2.F.img
Enter hostname for the sftp server: 172.19.2.1
Enter username: user1

Outbound-ReKey for 172.19.2.1:22
Inbound-ReKey for 172.19.2.1:22
user1@172.19.2.1's password:
sftp> progress
Progress meter enabled
sftp> get   /code/n9000-epld.10.4.2.F.img  /bootflash/n9000-
epld.10.4.2.F.img
/code/n9000-epld.10.4.2.F.img  100%  161MB   9.5MB/s   00:16
sftp> exit
Copy complete, now saving to disk (please wait)...
Copy complete.
```

7. Verify the running version of the NX-OS software:

   ```
   show version
   ```

Show example

```
cs2# show version
Cisco Nexus Operating System (NX-OS) Software
TAC support: http://www.cisco.com/tac
Copyright (C) 2002-2025, Cisco and/or its affiliates.
All rights reserved.
The copyrights to certain works contained in this software are
owned by other third parties and used and distributed under their
own
licenses, such as open source.  This software is provided "as is,"
and unless
otherwise stated, there is no warranty, express or implied,
including but not
limited to warranties of merchantability and fitness for a
particular purpose.
Certain components of this software are licensed under
the GNU General Public License (GPL) version 2.0 or
GNU General Public License (GPL) version 3.0  or the GNU
Lesser General Public License (LGPL) Version 2.1 or
Lesser General Public License (LGPL) Version 2.0.
A copy of each such license is available at
http://www.opensource.org/licenses/gpl-2.0.php and
http://opensource.org/licenses/gpl-3.0.html and
http://www.opensource.org/licenses/lgpl-2.1.php and
http://www.gnu.org/licenses/old-licenses/library.txt.


Software
  BIOS: version 01.14
  NXOS: version 10.4(1) [Feature Release]
  Host NXOS: version 10.4(1)
  BIOS compile time:  11/25/2024
  NXOS image file is: bootflash:///nxos64-cs.10.4.1.F.bin
  NXOS compile time:  11/30/2023 12:00:00 [12/14/2023 05:25:50]
  NXOS boot mode: LXC


Hardware
  cisco Nexus9000 C9332D-GX2B Chassis
  Intel(R) Xeon(R) CPU D-1633N @ 2.50GHz with 32802156 kB of memory.
  Processor Board ID FLMXXXXXXXX
  Device name: cs2
  bootflash:  115802886 kB
```

```
Kernel uptime is 5 day(s), 2 hour(s), 13 minute(s), 21 second(s)


Last reset at 3580 usecs after Thu Jun  5 15:55:08 2025
  Reason: Reset Requested by CLI command reload
  System version: 10.4(1)
  Service:


plugin
  Core Plugin, Ethernet Plugin


Active Package(s):

cs2#
```

8. Install the NX-OS image.

   Installing the image file causes it to be loaded every time the switch is rebooted.

Show example

```
cs2# install all nxos bootflash:nxos.10.4.2.bin

Installer will perform compatibility check first. Please wait.
Installer is forced disruptive

Verifying image bootflash:/nxos.10.4.2.bin for boot variable "nxos".
[] 100% -- SUCCESS

Verifying image type.
[] 100% -- SUCCESS

Preparing "nxos" version info using image
bootflash:/nxos.10.4.2.bin.
[] 100% -- SUCCESS

Preparing "bios" version info using image
bootflash:/nxos.10.4.2.bin.
[] 100% -- SUCCESS

Performing module support checks.
[] 100% -- SUCCESS

Notifying services about system upgrade.
[] 100% -- SUCCESS


Compatibility check is done:
Module  Bootable  Impact          Install-type  Reason
------  --------  --------------- ------------  ---------
  1     yes       Disruptive      Reset         Default upgrade is
not hitless



Images will be upgraded according to following table:

Module   Image    Running-Version(pri:alt)                 New-
Version         Upg-Required
-------  --------- ----------------------------------------
------------------- ------------
  1      nxos     10.4(1)                                  10.4(2)
Yes
  1      bios     xx.xx.:xx.xx                             xxx
No
```

```
Switch will be reloaded for disruptive upgrade.

Do you want to continue with the installation (y/n)? [n] y

Install is in progress, please wait.

Performing runtime checks.
[] 100% -- SUCCESS

Setting boot variables.
[] 100% -- SUCCESS

Performing configuration copy.
[] 100% -- SUCCESS

Module 1: Refreshing compact flash and upgrading
bios/loader/bootrom.
Warning: please do not remove or power off the module at this time.
[] 100% -- SUCCESS

Finishing the upgrade, switch will reboot in 10 seconds.
```

9. Verify the new version of NX-OS software after the switch has rebooted:

   ```
   show version
   ```

Show example

```
cs2# show version
Cisco Nexus Operating System (NX-OS) Software
TAC support: http://www.cisco.com/tac
Copyright (C) 2002-2025, Cisco and/or its affiliates.
All rights reserved.
The copyrights to certain works contained in this software are
owned by other third parties and used and distributed under their
own
licenses, such as open source.  This software is provided "as is,"
and unless
otherwise stated, there is no warranty, express or implied,
including but not
limited to warranties of merchantability and fitness for a
particular purpose.
Certain components of this software are licensed under
the GNU General Public License (GPL) version 2.0 or
GNU General Public License (GPL) version 3.0  or the GNU
Lesser General Public License (LGPL) Version 2.1 or
Lesser General Public License (LGPL) Version 2.0.
A copy of each such license is available at
http://www.opensource.org/licenses/gpl-2.0.php and
http://opensource.org/licenses/gpl-3.0.html and
http://www.opensource.org/licenses/lgpl-2.1.php and
http://www.gnu.org/licenses/old-licenses/library.txt.


Software
  BIOS: version 01.14
  NXOS: version 10.4(2) [Feature Release]
  Host NXOS: version 10.4(2)
  BIOS compile time:  11/25/2024
  NXOS image file is: bootflash:///nxos64-cs.10.4.2.F.bin
  NXOS compile time:  11/30/2023 12:00:00 [12/14/2023 05:25:50]
  NXOS boot mode: LXC


Hardware
  cisco Nexus9000 C9332D-GX2B Chassis
  Intel(R) Xeon(R) CPU D-1633N @ 2.50GHz with 32802156 kB of memory.
  Processor Board ID FLMXXXXXXXX
  Device name: cs2
  bootflash:  115802886 kB
```

```
Kernel uptime is 5 day(s), 2 hour(s), 13 minute(s), 21 second(s)


Last reset at 3580 usecs after Thu Jun  5 15:55:08 2025
  Reason: Reset Requested by CLI command reload
  System version: 10.4(2)
  Service:


plugin
  Core Plugin, Ethernet Plugin


Active Package(s):

cs2#
```

10. Upgrade the EPLD image and reboot the switch.

Show example

```
cs2# show version module 1 epld

EPLD Device                          Version
---------------------------------------
MI   FPGA                             0x7
IO   FPGA                             0x17
MI   FPGA2                            0x2
GEM  FPGA                             0x2
GEM  FPGA                             0x2
GEM  FPGA                             0x2
GEM  FPGA                             0x2

cs2# install epld bootflash:n9000-epld.10.4.2.F.img module all
Compatibility check:
Module        Type         Upgradable        Impact    Reason
------  ------------------ ----------------- --------- -----------
     1         SUP         Yes       disruptive  Module Upgradable

Retrieving EPLD versions.... Please wait.
Images will be upgraded according to following table:
Module  Type   EPLD              Running-Version   New-Version  Upg-
Required
------- ------ ----------------- ----------------- ------------
------------
     1  SUP    MI FPGA           0x07              0x07         No
     1  SUP    IO FPGA           0x17              0x19         Yes
     1  SUP    MI FPGA2          0x02              0x02         No
The above modules require upgrade.
The switch will be reloaded at the end of the upgrade
Do you want to continue (y/n) ?  [n] y

Proceeding to upgrade Modules.

Starting Module 1 EPLD Upgrade

Module 1 : IO FPGA [Programming] : 100.00% (     64 of      64
sectors)
Module 1 EPLD upgrade is successful.
Module   Type  Upgrade-Result
-------- ----- --------------
     1   SUP   Success

EPLDs upgraded.

Module 1 EPLD upgrade is successful.
```

11. After the switch reboot, log in again and verify that the new version of EPLD loaded successfully.

Show example

```
cs2# show version module 1 epld

EPLD Device                          Version
--------------------------------------
MI   FPGA                             0x7
IO   FPGA                             0x19
MI   FPGA2                            0x2
GEM  FPGA                             0x2
GEM  FPGA                             0x2
GEM  FPGA                             0x2
GEM  FPGA                             0x2
```

12. Verify the health of all of the ports on the cluster.
    a. **Cluster ports**
        i. Verify that cluster ports are up and healthy across all nodes in the cluster:

```
network port show -ipspace Cluster
```

Show example

```
cluster1::*> network port show -ipspace Cluster

Node: node1-01

Ignore
                                                  Speed(Mbps)
Health   Health
Port      IPspace      Broadcast Domain Link MTU  Admin/Oper
Status   Status
--------- ------------ ---------------- ---- ---- -----------
-------- ------
e7a       Cluster      Cluster          up   9000  auto/10000
healthy  false
e7b       Cluster      Cluster          up   9000  auto/10000
healthy  false

Node: node1-02

Ignore
                                                  Speed(Mbps)
Health   Health
Port      IPspace      Broadcast Domain Link MTU  Admin/Oper
Status   Status
--------- ------------ ---------------- ---- ---- -----------
-------- ------
e7a       Cluster      Cluster          up   9000  auto/10000
healthy  false
e7b       Cluster      Cluster          up   9000  auto/10000
healthy  false

Node: node1-03

Ignore
                                                  Speed(Mbps)
Health   Health
Port      IPspace      Broadcast Domain Link MTU  Admin/Oper
Status   Status
--------- ------------ ---------------- ---- ---- -----------
-------- ------
e7a       Cluster      Cluster          up   9000  auto/100000
healthy false
e7b       Cluster      Cluster          up   9000  auto/100000
healthy false
```

```
Node: node1-04

Ignore
                                                          Speed(Mbps)
Health   Health
Port      IPspace      Broadcast Domain Link MTU  Admin/Oper
Status   Status
--------- ------------ ---------------- ---- ---- -----------
-------- ------
e7a       Cluster      Cluster          up   9000  auto/100000
healthy false
e7b       Cluster      Cluster          up   9000  auto/100000
healthy false
```

ii. Verify the switch health from the cluster:

```
network device-discovery show -protocol cdp
```

```
system cluster-switch show -is-monitoring-enabled-operational true
```

Show example

```
cluster1::*> network device-discovery show -protocol cdp

node1-01/cdp
            e10a   cs1(FLMXXXXXXXX)         Ethernet1/16/3
N9K-C9364D-GX2A
            e10b   cs2(FDOXXXXXXXX)         Ethernet1/13/3
N9K-C9364D-GX2A
            e11a   cs1(FLMXXXXXXXX)         Ethernet1/16/4
N9K-C9364D-GX2A
            e11b   cs2(FDOXXXXXXXX)         Ethernet1/13/4
N9K-C9364D-GX2A
            e1a    cs1(FLMXXXXXXXX)         Ethernet1/16/1
N9K-C9364D-GX2A
            e1b    cs2(FDOXXXXXXXX)         Ethernet1/13/1
N9K-C9364D-GX2A
            .
            .
            .
            e7a    cs1(FLMXXXXXXXX)         Ethernet1/16/2
N9K-C9364D-GX2A
            e7b    cs2(FDOXXXXXXXX)         Ethernet1/13/2
N9K-C9364D-GX2A

node1-02/cdp
            e10a   cs1(FLMXXXXXXXX)         Ethernet1/16/3
N9K-C9364D-GX2A
            e10b   cs2(FDOXXXXXXXX)         Ethernet1/13/3
N9K-C9364D-GX2A
            e11a   cs1(FLMXXXXXXXX)         Ethernet1/16/4
N9K-C9364D-GX2A
            e11b   cs2(FDOXXXXXXXX)         Ethernet1/13/4
N9K-C9364D-GX2A
            e1a    cs1(FLMXXXXXXXX)         Ethernet1/16/1
N9K-C9364D-GX2A
            e1b    cs2(FDOXXXXXXXX)         Ethernet1/13/1
N9K-C9364D-GX2A
            .
            .
            .
            e7a    cs1(FLMXXXXXXXX)         Ethernet1/16/2
N9K-C9364D-GX2A
            e7b    cs2(FDOXXXXXXXX)         Ethernet1/13/2
N9K-C9364D-GX2A
.
```

```
.
.

cluster1::*> system cluster-switch show -is-monitoring-enabled
-operational true
Switch                      Type               Address
Model
--------------------------- ------------------
--------------- ---------------
cs2(FDOXXXXXXXX)            cluster-network    10.228.137.233
N9K-C9364D-GX2A
     Serial Number: FDOXXXXXXXX
      Is Monitored: true
            Reason: None
  Software Version: Cisco Nexus Operating System (NX-OS)
Software, Version
                    10.4(2)
    Version Source: CDP/ISDP


cs1(FLMXXXXXXXX)             cluster-network   10.228.137.253
N9K-C9364D-GX2A
     Serial Number: FLMXXXXXXXX
      Is Monitored: true
            Reason: None
  Software Version: Cisco Nexus Operating System (NX-OS)
Software, Version
                    10.4(2)
    Version Source: CDP/ISDP
```

b. **HA ports**

i. Verify that all the HA ports are up with a healthy status:

```
ha interconnect status show -node <node-name>
```

Show example

```
cluster1::*> ha interconnect status show -node node1-01
  (system ha interconnect status show)

                        Node: node1-01
                Link 0 Status: up
                Link 1 Status: up
            Is Link 0 Active: true
            Is Link 1 Active: true
          IC RDMA Connection: up
                        Slot: 0
               Debug Firmware: no


Interconnect Port 0 :
                   Port Name: e1a-17
                         MTU: 4096
             Link Information: ACTIVE


Interconnect Port 1 :
                   Port Name: e1b-18
                         MTU: 4096
             Link Information: ACTIVE

cluster1::*> ha interconnect status show -node node1-02
  (system ha interconnect status show)

                        Node: node1-02
                Link 0 Status: up
                Link 1 Status: up
            Is Link 0 Active: true
            Is Link 1 Active: true
          IC RDMA Connection: up
                        Slot: 0
               Debug Firmware: no


Interconnect Port 0 :
                   Port Name: e1a-17
                         MTU: 4096
             Link Information: ACTIVE


Interconnect Port 1 :
```

```
                  Port Name: e1b-18
                        MTU: 4096
           Link Information: ACTIVE
.
.
.
```

c. **Storage ports**

i. Verify that all the storage ports are up with a healthy status:

```
storage port show -port-type ENET
```

Show example

```
cluster1::*> storage port show -port-type ENET

                                     Speed
Node                Port Type  Mode    (Gb/s) State    Status
------------------ ---- ----- ------- ------ --------
-----------
node1-01
                    e10a ENET  -          100 enabled  online
                    e10b ENET  -          100 enabled  online
                    e11a ENET  -          100 enabled  online
                    e11b ENET  -          100 enabled  online
node1-02
                    e10a ENET  -          100 enabled  online
                    e10b ENET  -          100 enabled  online
                    e11a ENET  -          100 enabled  online
                    e11b ENET  -          100 enabled  online
node1-03
                    e10a ENET  -          100 enabled  online
                    e10b ENET  -          100 enabled  online
                    e11a ENET  -          100 enabled  online
node1-04
                    e10a ENET  -          100 enabled  online
                    e10b ENET  -          100 enabled  online
                    e11a ENET  -          100 enabled  online
                    e11b ENET  -          100 enabled  online
16 entries were displayed.
```

d. **Storage shelf ports**

i. Verify that all the storage shelf ports are up with a healthy status:

```
storage shelf port show
```

Show example

```
cluster1::*> storage shelf port show

Shelf ID Module State        Internal?
-------- -- ------ ---------- ---------
1.1
         0 A      connected    false
         1 A      connected    false
         2 A      connected    false
         3 A      connected    false
         4 A      connected    false
         5 A      connected    false
         6 A      connected    false
         7 A      connected    false
         8 B      connected    false
         9 B      connected    false
        10 B      connected    false
        11 B      connected    false
        12 B      connected    false
        13 B      connected    false
        14 B      connected    false
        15 B      connected    false

16 entries were displayed.
```

ii. Verify the connection status of all the storage shelf ports:

```
storage shelf port show -fields remote-device,remote-
port,connector-state
```

Show example

```
cluster1::*> storage shelf port show -fields remote-
device,remote-port,connector-state

shelf id connector-state remote-port    remote-device
----- -- -------------- -------------- -----------------
1.1   0  connected       Ethernet1/17/1 CX9332D-cs1
1.1   1  connected       Ethernet1/15/1 CX9364D-cs1
1.1   2  connected       Ethernet1/17/2 CX9332D-cs1
1.1   3  connected       Ethernet1/15/2 CX9364D-cs1
1.1   4  connected       Ethernet1/17/3 CX9332D-cs1
1.1   5  connected       Ethernet1/15/3 CX9364D-cs1
1.1   6  connected       Ethernet1/17/4 CX9332D-cs1
1.1   7  connected       Ethernet1/15/4 CX9364D-cs1
1.1   8  connected       Ethernet1/19/1 CX9332D-cs1
1.1   9  connected       Ethernet1/17/1 CX9364D-cs1
1.1   10 connected       Ethernet1/19/2 CX9332D-cs1
1.1   11 connected       Ethernet1/17/2 CX9364D-cs1
1.1   12 connected       Ethernet1/19/3 CX9332D-cs1
1.1   13 connected       Ethernet1/17/3 CX9364D-cs1
1.1   14 connected       Ethernet1/19/4 CX9332D-cs1
1.1   15 connected       Ethernet1/17/4 CX9364D-cs1

16 entries were displayed.
```

13. Verify that the cluster is healthy:

    `cluster show`

    Show example

```
cluster1::*> cluster show


Node                 Health  Eligibility   Epsilon
-------------------- ------- ------------  ------------
node1-01             true    true          false
node1-02             true    true          false
node1-03             true    true          false
node1-04             true    true          true

4 entries were displayed.
```

14. Repeat steps 6 to 13 to install the NX-OS software on switch cs1.
15. Enable auto-revert on the cluster LIFs.

```
network interface modify -vserver Cluster -lif * -auto-revert true
```

16. Verify that the cluster LIFs have reverted to their home port:

```
network interface show -role cluster
```

Show example

```
cluster1::*> network interface show -role cluster

            Logical         Status     Network             Current
Current Is
Vserver     Interface       Admin/Oper Address/Mask        Node
Port    Home
----------- --------------- ---------- ------------------
----------- ------- ----
Cluster
            node1-01_clus1  up/up      169.254.36.44/16    node1-01
e7a     true
            node1-01_clus2  up/up      169.254.7.5/16      node1-01
e7b     true
            node1-02_clus1  up/up      169.254.197.206/16 node1-02
e7a     true
            node1-02_clus2  up/up      169.254.195.186/16 node1-02
e7b     true
            node1-03_clus1  up/up      169.254.192.49/16   node1-03
e7a     true
            node1-03_clus2  up/up      169.254.182.76/16   node1-03
e7b     true
            node1-04_clus1  up/up      169.254.59.49/16    node1-04
e7a     true
            node1-04_clus2  up/up      169.254.62.244/16   node1-04
e7b     true
```

If any cluster LIFs have not returned to their home ports, revert them manually from the local node:

```
network interface revert -vserver Cluster -lif <lif-name>
```

What's next?

After you've installed or upgraded the NX-OS software, you install or upgrade the Reference Configuration File (RCF).

Install or upgrade the RCF

Install or upgrade the Reference Configuration File (RCF) overview

You install the Reference Configuration File (RCF) after setting up the Nexus 9364D-GX2A switch for the first time. You upgrade your RCF version when you have an existing version of the RCF file installed on your switch.

See the Knowledge Base article How to clear configuration on a Cisco interconnect switch while retaining remote connectivity for further information when installing or upgrading your RCF.

Available RCF configuration

- **Cluster-HA-Storage AFX** - All ports are configured in 4x100GbE breakout mode that universally supports AFX node clusters, HA, storage ports, and NX224 storage shelf ports. 400GbE ISL between switches. (*Cluster-HA-Storage AFX RCF_vxx.x*).

For specific port and VLAN usage details, refer to the banner and important notes section in your RCF. See Cisco Ethernet Switches for more information.

Suggested documentation

- Cisco Ethernet Switches (NSS)

  Consult the switch compatibility table for the supported ONTAP and RCF versions on the NetApp Support Site. Note that there can be command dependencies between the command syntax in the RCF and the syntax found in specific versions of NX-OS.

- Cisco Nexus 3=9000 Series Switches

  Refer to the appropriate software and upgrade guides available on the Cisco website for complete documentation on the Cisco switch upgrade and downgrade procedures.

About the examples

The examples in this procedure use the following switch and node nomenclature:

- The names of the two Cisco switches are cs1 and cs2.
- The node names are node1-01, node1-02, node1-03, and node1-04.
- The cluster LIF names are node1-01_clus1, node1-01_clus2, node1-02_clus1, node1-02_clus2, node1-03_clus1, node1-03_clus2, node1-04_clus1, and node1-04_clus2.
- The `cluster1::*>` prompt indicates the name of the cluster.

See the Hardware Universe to verify the correct cluster ports on your platforms.

> The command outputs might vary depending on different releases of ONTAP.

Commands used

The procedure requires the use of both ONTAP commands and Cisco Nexus 9000 Series Switches commands; ONTAP commands are used unless otherwise indicated.

What's next?

After you've reviewed the install RCF or upgrade RCF procedure, you install the RCF or upgrade your RCF as required.

You install the Reference Configuration File (RCF) after setting up the Nexus 9364D-GX2A switch for the first time.

Before you begin

Verify the following installations and connections:

- A console connection to the switch. The console connection is optional if you have remote access to the switch.
- Switch cs1 and switch cs2 are powered up and the initial switch setup is complete (the Management IP address and SSH is setup).
- The desired NX-OS version has been installed.
- ISL connections between switches are connected.
- ONTAP node cluster ports are not connected.

Step 1: Install the RCF on the switches

1. Login to switch cs1 using SSH or by using a serial console.
2. Copy the RCF to the bootflash of switch cs1 using one of the following transfer protocols: FTP, TFTP, SFTP, or SCP.

   For more information on Cisco commands, see the appropriate guide in the Cisco Nexus 9000 Series NX-OS Command Reference guides.

   Show example

   This example shows TFTP being used to copy an RCF to the bootflash on switch cs1:

   ```
   cs1# copy tftp: bootflash: vrf management
   Enter source filename: NX9364D-GX2A-RCF-v10.0-Shared.txt
   Enter hostname for the tftp server: 172.22.201.50
   Trying to connect to tftp server......Connection to Server
   Established.
   TFTP get operation was successful
   Copy complete, now saving to disk (please wait)...
   ```

3. Apply the RCF previously downloaded to the bootflash.

   For more information on Cisco commands, see the appropriate guide in the Cisco Nexus 9000 Series NX-OS Command Reference guides.

Show example

This example shows the RCF file `NX9364D-GX2A-RCF-v10.0-Shared.txt` being installed on switch cs1:

```
cs1# copy NX9364D-GX2A-RCF-v10.0-Shared.txt running-config echo-
commands
```

4. Examine the banner output from the `show banner motd` command. You must read and follow these instructions to ensure the proper configuration and operation of the switch.

Show example

```
cs1# show banner motd

**********************************************************************
**********
* NetApp Reference Configuration File (RCF)
*
* Switch   : NX9364D-GX2A
* Filename : NX9364D-GX2A-RCF-v10.0-Shared.txt
* Date     : 05-09-2025
* Version  : v10.0
* Port Usage:
* Ports  1-62: 100GbE Intra-Cluster/HA/Storage Ports, int e1/{1-
62}/1-4
* Ports 63-64: Intra-Cluster ISL Ports, int e1/63-64
*
* IMPORTANT NOTES
* Interface port-channel999 is reserved to identify the version of
this file.
*
**********************************************************************
**********
```

5. Verify that the RCF file is the correct newer version:

`show running-config`

When you check the output to verify you have the correct RCF, make sure that the following information is correct:

- The RCF banner
- The node and port settings

- Customizations

  The output varies according to your site configuration. Check the port settings and refer to the release notes for any changes specific to the RCF that you have installed.

6. Save basic configuration details to the `write_erase.cfg` file on the bootflash.

   Make sure to configure the following:

   - Username and password
   - Management IP address
   - Default gateway
   - Switch name

```
cs1# show run | i "username admin password" > bootflash:write_erase.cfg

cs1# show run | section "vrf context management" >> bootflash:write_erase.cfg

cs1# show run | section "interface mgmt0" >> bootflash:write_erase.cfg

cs1# show run | section "switchname" >> bootflash:write_erase.cfg

cs1# echo "hardware access-list tcam region ing-racl 1024" >>
bootflash:write_erase.cfg

cs1# echo "hardware access-list tcam region egr-racl 1024" >>
bootflash:write_erase.cfg

cs1# echo "hardware access-list tcam region ing-l2-qos 1536" >>
bootflash:write_erase.cfg
```

   See the Knowledge Base article How to clear configuration on a Cisco interconnect switch while retaining remote connectivity for further details.

7. Verify that the `write_erase.cfg` file is populated as expected:

```
show file bootflash:write_erase.cfg
```

8. Issue the `write erase` command to erase the current saved configuration:

```
cs1# write erase

Warning: This command will erase the startup-configuration.

Do you wish to proceed anyway? (y/n) [n] y
```

9. Copy the previously saved basic configuration into the startup configuration.

```
cs1# copy bootflash:write_erase.cfg startup-config
```

10. Reboot the switch:

```
cs1# reload

This command will reboot the system. (y/n)? [n] y
```

11. Repeat steps 1 through 10 on switch cs2.
12. Connect the ports of all nodes in the ONTAP cluster to switches cs1 and cs2.

Step 2: Verify the switch connections

1. Verify that the switch ports connected to the cluster ports are up:

```
show interface brief
```

Show example

```
cs1# show interface brief | grep up
.
.
Eth1/9/3        1       eth  trunk  up      none
100G(D) --
Eth1/9/4        1       eth  trunk  up      none
100G(D) --
Eth1/15/1       1       eth  trunk  up      none
100G(D) --
Eth1/15/2       1       eth  trunk  up      none
100G(D) --
Eth1/15/3       1       eth  trunk  up      none
100G(D) --
Eth1/15/4       1       eth  trunk  up      none
100G(D) --
Eth1/16/1       1       eth  trunk  up      none
100G(D) --
Eth1/16/2       1       eth  trunk  up      none
100G(D) --
Eth1/16/3       1       eth  trunk  up      none
100G(D) --
Eth1/16/4       1       eth  trunk  up      none
100G(D) --
Eth1/17/1       1       eth  trunk  up      none
100G(D) --
Eth1/17/2       1       eth  trunk  up      none
100G(D) --
Eth1/17/3       1       eth  trunk  up      none
100G(D) --
Eth1/17/4       1       eth  trunk  up      none
100G(D) --
.
.
```

2. Verify that the cluster nodes are in their correct cluster VLANs using the following commands:

   `show vlan brief`

   `show interface trunk`

Show example

```
cs1# show vlan brief

VLAN Name                              Status    Ports
---- --------------------------------- ---------
------------------------------
1    default                           active    Po1, Po999, Eth1/63,
Eth1/64
                                                 Eth1/65, Eth1/66,
Eth1/1/1
                                                 Eth1/1/2, Eth1/1/3,
Eth1/1/4
                                                 Eth1/2/1, Eth1/2/2,
Eth1/2/3
                                                 Eth1/2/4, Eth1/3/1,
Eth1/3/2
                                                 Eth1/3/3, Eth1/3/4,
Eth1/4/1
                                                 Eth1/4/2, Eth1/4/3,
Eth1/4/4
                                                 Eth1/5/1, Eth1/5/2,
Eth1/5/3
                                                 Eth1/5/4, Eth1/6/1,
Eth1/6/2
                                                 Eth1/6/3, Eth1/6/4,
Eth1/7/1
                                                 Eth1/7/2, Eth1/7/3,
Eth1/7/4
                                                 Eth1/8/1, Eth1/8/2,
Eth1/8/3
                                                 Eth1/8/4, Eth1/9/1,
Eth1/9/2
                                                 Eth1/9/3, Eth1/9/4,
Eth1/10/1
                                                 Eth1/10/2,
Eth1/10/3, Eth1/10/4
                                                 Eth1/11/1,
Eth1/11/2, Eth1/11/3
                                                 Eth1/11/4,
Eth1/12/1, Eth1/12/2
                                                 Eth1/12/3,
Eth1/12/4, Eth1/13/1
                                                 Eth1/13/2,
Eth1/13/3, Eth1/13/4
                                                 Eth1/14/1,
```

```
Eth1/14/2, Eth1/14/3
                                                    Eth1/14/4,
Eth1/15/1, Eth1/15/2
                                                    Eth1/15/3,
Eth1/15/4, Eth1/16/1
                                                    Eth1/16/2,
Eth1/16/3, Eth1/16/4
                                                    Eth1/17/1,
Eth1/17/2, Eth1/17/3
                                                    Eth1/17/4,
Eth1/18/1, Eth1/18/2
                                                    Eth1/18/3,
Eth1/18/4, Eth1/19/1
                                                    Eth1/19/2,
Eth1/19/3, Eth1/19/4
                                                    Eth1/20/1,
Eth1/20/2, Eth1/20/3
                                                    Eth1/20/4,
Eth1/21/1, Eth1/21/2
                                                    Eth1/21/3,
Eth1/21/4, Eth1/22/1
                                                    Eth1/22/2,
Eth1/22/3, Eth1/22/4
                                                    Eth1/23/1,
Eth1/23/2, Eth1/23/3
                                                    Eth1/23/4,
Eth1/24/1, Eth1/24/2
                                                    Eth1/24/3,
Eth1/24/4, Eth1/25/1
                                                    Eth1/25/2,
Eth1/25/3, Eth1/25/4
                                                    Eth1/26/1,
Eth1/26/2, Eth1/26/3
                                                    Eth1/26/4,
Eth1/27/1, Eth1/27/2
                                                    Eth1/27/3,
Eth1/27/4, Eth1/28/1
                                                    Eth1/28/2,
Eth1/28/3, Eth1/28/4
                                                    Eth1/29/1,
Eth1/29/2, Eth1/29/3
                                                    Eth1/29/4,
Eth1/30/1, Eth1/30/2
                                                    Eth1/30/3,
Eth1/30/4, Eth1/31/1
                                                    Eth1/31/2,
```

```
Eth1/31/3, Eth1/31/4
                                                    Eth1/32/1,
Eth1/32/2, Eth1/32/3
                                                    Eth1/32/4,
Eth1/33/1, Eth1/33/2
                                                    Eth1/33/3,
Eth1/33/4, Eth1/34/1
                                                    Eth1/34/2,
Eth1/34/3, Eth1/34/4
                                                    Eth1/35/1,
Eth1/35/2, Eth1/35/3
                                                    Eth1/35/4,
Eth1/36/1, Eth1/36/2
                                                    Eth1/36/3,
Eth1/36/4, Eth1/37/1
                                                    Eth1/37/2,
Eth1/37/3, Eth1/37/4
                                                    Eth1/38/1,
Eth1/38/2, Eth1/38/3
                                                    Eth1/38/4,
Eth1/39/1, Eth1/39/2
                                                    Eth1/39/3,
Eth1/39/4, Eth1/40/1
                                                    Eth1/40/2,
Eth1/40/3, Eth1/40/4
                                                    Eth1/41/1,
Eth1/41/2, Eth1/41/3
                                                    Eth1/41/4,
Eth1/42/1, Eth1/42/2
                                                    Eth1/42/3,
Eth1/42/4, Eth1/43/1
                                                    Eth1/43/2,
Eth1/43/3, Eth1/43/4
                                                    Eth1/44/1,
Eth1/44/2, Eth1/44/3
                                                    Eth1/44/4,
Eth1/45/1, Eth1/45/2
                                                    Eth1/45/3,
Eth1/45/4, Eth1/46/1
                                                    Eth1/46/2,
Eth1/46/3, Eth1/46/4
                                                    Eth1/47/1,
Eth1/47/2, Eth1/47/3
                                                    Eth1/47/4,
Eth1/48/1, Eth1/48/2
                                                    Eth1/48/3,
```

```
Eth1/48/4, Eth1/49/1
                                                    Eth1/49/2,
Eth1/49/3, Eth1/49/4
                                                    Eth1/50/1,
Eth1/50/2, Eth1/50/3
                                                    Eth1/50/4,
Eth1/51/1, Eth1/51/2
                                                    Eth1/51/3,
Eth1/51/4, Eth1/52/1
                                                    Eth1/52/2,
Eth1/52/3, Eth1/52/4
                                                    Eth1/53/1,
Eth1/53/2, Eth1/53/3
                                                    Eth1/53/4,
Eth1/54/1, Eth1/54/2
                                                    Eth1/54/3,
Eth1/54/4, Eth1/55/1
                                                    Eth1/55/2,
Eth1/55/3, Eth1/55/4
                                                    Eth1/56/1,
Eth1/56/2, Eth1/56/3
                                                    Eth1/56/4,
Eth1/57/1, Eth1/57/2
                                                    Eth1/57/3,
Eth1/57/4, Eth1/58/1
                                                    Eth1/58/2,
Eth1/58/3, Eth1/58/4
                                                    Eth1/59/1,
Eth1/59/2, Eth1/59/3
                                                    Eth1/59/4,
Eth1/60/1, Eth1/60/2
                                                    Eth1/60/3,
Eth1/60/4, Eth1/61/1
                                                    Eth1/61/2,
Eth1/61/3, Eth1/61/4
                                                    Eth1/62/1,
Eth1/62/2, Eth1/62/3
                                                    Eth1/62/4
17   VLAN0017                         active    Eth1/1/1, Eth1/1/2,
Eth1/1/3
                                                    Eth1/1/4, Eth1/2/1,
Eth1/2/2
                                                    Eth1/2/3, Eth1/2/4,
Eth1/3/1
                                                    Eth1/3/2, Eth1/3/3,
Eth1/3/4
```

```
                                                    Eth1/4/1, Eth1/4/2,
Eth1/4/3
                                                    Eth1/4/4, Eth1/5/1,
Eth1/5/2
                                                    Eth1/5/3, Eth1/5/4,
Eth1/6/1
                                                    Eth1/6/2, Eth1/6/3,
Eth1/6/4
                                                    Eth1/7/1, Eth1/7/2,
Eth1/7/3
                                                    Eth1/7/4, Eth1/8/1,
Eth1/8/2
                                                    Eth1/8/3, Eth1/8/4,
Eth1/9/1
                                                    Eth1/9/2, Eth1/9/3,
Eth1/9/4
                                                    Eth1/10/1,
Eth1/10/2, Eth1/10/3
                                                    Eth1/10/4,
Eth1/11/1, Eth1/11/2
                                                    Eth1/11/3,
Eth1/11/4, Eth1/12/1
                                                    Eth1/12/2,
Eth1/12/3, Eth1/12/4
                                                    Eth1/13/1,
Eth1/13/2, Eth1/13/3
                                                    Eth1/13/4,
Eth1/14/1, Eth1/14/2
                                                    Eth1/14/3,
Eth1/14/4, Eth1/15/1
                                                    Eth1/15/2,
Eth1/15/3, Eth1/15/4
                                                    Eth1/16/1,
Eth1/16/2, Eth1/16/3
                                                    Eth1/16/4,
Eth1/17/1, Eth1/17/2
                                                    Eth1/17/3,
Eth1/17/4, Eth1/18/1
                                                    Eth1/18/2,
Eth1/18/3, Eth1/18/4
                                                    Eth1/19/1,
Eth1/19/2, Eth1/19/3
                                                    Eth1/19/4,
Eth1/20/1, Eth1/20/2
                                                    Eth1/20/3,
Eth1/20/4, Eth1/21/1
```

```
                                                    Eth1/21/2,
Eth1/21/3, Eth1/21/4
                                                    Eth1/22/1,
Eth1/22/2, Eth1/22/3
                                                    Eth1/22/4,
Eth1/23/1, Eth1/23/2
                                                    Eth1/23/3,
Eth1/23/4, Eth1/24/1
                                                    Eth1/24/2,
Eth1/24/3, Eth1/24/4
                                                    Eth1/25/1,
Eth1/25/2, Eth1/25/3
                                                    Eth1/25/4,
Eth1/26/1, Eth1/26/2
                                                    Eth1/26/3,
Eth1/26/4, Eth1/27/1
                                                    Eth1/27/2,
Eth1/27/3, Eth1/27/4
                                                    Eth1/28/1,
Eth1/28/2, Eth1/28/3
                                                    Eth1/28/4,
Eth1/29/1, Eth1/29/2
                                                    Eth1/29/3,
Eth1/29/4, Eth1/30/1
                                                    Eth1/30/2,
Eth1/30/3, Eth1/30/4
                                                    Eth1/31/1,
Eth1/31/2, Eth1/31/3
                                                    Eth1/31/4,
Eth1/32/1, Eth1/32/2
                                                    Eth1/32/3,
Eth1/32/4, Eth1/33/1
                                                    Eth1/33/2,
Eth1/33/3, Eth1/33/4
                                                    Eth1/34/1,
Eth1/34/2, Eth1/34/3
                                                    Eth1/34/4,
Eth1/35/1, Eth1/35/2
                                                    Eth1/35/3,
Eth1/35/4, Eth1/36/1
                                                    Eth1/36/2,
Eth1/36/3, Eth1/36/4
                                                    Eth1/37/1,
Eth1/37/2, Eth1/37/3
                                                    Eth1/37/4,
Eth1/38/1, Eth1/38/2
```

```
                                                    Eth1/38/3,
Eth1/38/4, Eth1/39/1
                                                    Eth1/39/2,
Eth1/39/3, Eth1/39/4
                                                    Eth1/40/1,
Eth1/40/2, Eth1/40/3
                                                    Eth1/40/4,
Eth1/41/1, Eth1/41/2
                                                    Eth1/41/3,
Eth1/41/4, Eth1/42/1
                                                    Eth1/42/2,
Eth1/42/3, Eth1/42/4
                                                    Eth1/43/1,
Eth1/43/2, Eth1/43/3
                                                    Eth1/43/4,
Eth1/44/1, Eth1/44/2
                                                    Eth1/44/3,
Eth1/44/4, Eth1/45/1
                                                    Eth1/45/2,
Eth1/45/3, Eth1/45/4
                                                    Eth1/46/1,
Eth1/46/2, Eth1/46/3
                                                    Eth1/46/4,
Eth1/47/1, Eth1/47/2
                                                    Eth1/47/3,
Eth1/47/4, Eth1/48/1
                                                    Eth1/48/2,
Eth1/48/3, Eth1/48/4
                                                    Eth1/49/1,
Eth1/49/2, Eth1/49/3
                                                    Eth1/49/4,
Eth1/50/1, Eth1/50/2
                                                    Eth1/50/3,
Eth1/50/4, Eth1/51/1
                                                    Eth1/51/2,
Eth1/51/3, Eth1/51/4
                                                    Eth1/52/1,
Eth1/52/2, Eth1/52/3
                                                    Eth1/52/4,
Eth1/53/1, Eth1/53/2
                                                    Eth1/53/3,
Eth1/53/4, Eth1/54/1
                                                    Eth1/54/2,
Eth1/54/3, Eth1/54/4
                                                    Eth1/55/1,
Eth1/55/2, Eth1/55/3
```

```
                                                  Eth1/55/4,
Eth1/56/1, Eth1/56/2
                                                  Eth1/56/3,
Eth1/56/4, Eth1/57/1
                                                  Eth1/57/2,
Eth1/57/3, Eth1/57/4
                                                  Eth1/58/1,
Eth1/58/2, Eth1/58/3
                                                  Eth1/58/4,
Eth1/59/1, Eth1/59/2
                                                  Eth1/59/3,
Eth1/59/4, Eth1/60/1
                                                  Eth1/60/2,
Eth1/60/3, Eth1/60/4
                                                  Eth1/61/1,
Eth1/61/2, Eth1/61/3
                                                  Eth1/61/4,
Eth1/62/1, Eth1/62/2
                                                  Eth1/62/3, Eth1/62/4
18   VLAN0018                         active    Eth1/1/1, Eth1/1/2,
Eth1/1/3
                                                  Eth1/1/4, Eth1/2/1,
Eth1/2/2
                                                  Eth1/2/3, Eth1/2/4,
Eth1/3/1
                                                  Eth1/3/2, Eth1/3/3,
Eth1/3/4
                                                  Eth1/4/1, Eth1/4/2,
Eth1/4/3
                                                  Eth1/4/4, Eth1/5/1,
Eth1/5/2
                                                  Eth1/5/3, Eth1/5/4,
Eth1/6/1
                                                  Eth1/6/2, Eth1/6/3,
Eth1/6/4
                                                  Eth1/7/1, Eth1/7/2,
Eth1/7/3
                                                  Eth1/7/4, Eth1/8/1,
Eth1/8/2
                                                  Eth1/8/3, Eth1/8/4,
Eth1/9/1
                                                  Eth1/9/2, Eth1/9/3,
Eth1/9/4
                                                  Eth1/10/1,
Eth1/10/2, Eth1/10/3
                                                  Eth1/10/4,
```

```
Eth1/11/1, Eth1/11/2
                                                    Eth1/11/3,
Eth1/11/4, Eth1/12/1
                                                    Eth1/12/2,
Eth1/12/3, Eth1/12/4
                                                    Eth1/13/1,
Eth1/13/2, Eth1/13/3
                                                    Eth1/13/4,
Eth1/14/1, Eth1/14/2
                                                    Eth1/14/3,
Eth1/14/4, Eth1/15/1
                                                    Eth1/15/2,
Eth1/15/3, Eth1/15/4
                                                    Eth1/16/1,
Eth1/16/2, Eth1/16/3
                                                    Eth1/16/4,
Eth1/17/1, Eth1/17/2
                                                    Eth1/17/3,
Eth1/17/4, Eth1/18/1
                                                    Eth1/18/2,
Eth1/18/3, Eth1/18/4
                                                    Eth1/19/1,
Eth1/19/2, Eth1/19/3
                                                    Eth1/19/4,
Eth1/20/1, Eth1/20/2
                                                    Eth1/20/3,
Eth1/20/4, Eth1/21/1
                                                    Eth1/21/2,
Eth1/21/3, Eth1/21/4
                                                    Eth1/22/1,
Eth1/22/2, Eth1/22/3
                                                    Eth1/22/4,
Eth1/23/1, Eth1/23/2
                                                    Eth1/23/3,
Eth1/23/4, Eth1/24/1
                                                    Eth1/24/2,
Eth1/24/3, Eth1/24/4
                                                    Eth1/25/1,
Eth1/25/2, Eth1/25/3
                                                    Eth1/25/4,
Eth1/26/1, Eth1/26/2
                                                    Eth1/26/3,
Eth1/26/4, Eth1/27/1
                                                    Eth1/27/2,
Eth1/27/3, Eth1/27/4
                                                    Eth1/28/1,
```

```
Eth1/28/2, Eth1/28/3
                                                    Eth1/28/4,
Eth1/29/1, Eth1/29/2
                                                    Eth1/29/3,
Eth1/29/4, Eth1/30/1
                                                    Eth1/30/2,
Eth1/30/3, Eth1/30/4
                                                    Eth1/31/1,
Eth1/31/2, Eth1/31/3
                                                    Eth1/31/4,
Eth1/32/1, Eth1/32/2
                                                    Eth1/32/3,
Eth1/32/4, Eth1/33/1
                                                    Eth1/33/2,
Eth1/33/3, Eth1/33/4
                                                    Eth1/34/1,
Eth1/34/2, Eth1/34/3
                                                    Eth1/34/4,
Eth1/35/1, Eth1/35/2
                                                    Eth1/35/3,
Eth1/35/4, Eth1/36/1
                                                    Eth1/36/2,
Eth1/36/3, Eth1/36/4
                                                    Eth1/37/1,
Eth1/37/2, Eth1/37/3
                                                    Eth1/37/4,
Eth1/38/1, Eth1/38/2
                                                    Eth1/38/3,
Eth1/38/4, Eth1/39/1
                                                    Eth1/39/2,
Eth1/39/3, Eth1/39/4
                                                    Eth1/40/1,
Eth1/40/2, Eth1/40/3
                                                    Eth1/40/4,
Eth1/41/1, Eth1/41/2
                                                    Eth1/41/3,
Eth1/41/4, Eth1/42/1
                                                    Eth1/42/2,
Eth1/42/3, Eth1/42/4
                                                    Eth1/43/1,
Eth1/43/2, Eth1/43/3
                                                    Eth1/43/4,
Eth1/44/1, Eth1/44/2
                                                    Eth1/44/3,
Eth1/44/4, Eth1/45/1
                                                    Eth1/45/2,
```

```
Eth1/45/3, Eth1/45/4
                                                    Eth1/46/1,
Eth1/46/2, Eth1/46/3
                                                    Eth1/46/4,
Eth1/47/1, Eth1/47/2
                                                    Eth1/47/3,
Eth1/47/4, Eth1/48/1
                                                    Eth1/48/2,
Eth1/48/3, Eth1/48/4
                                                    Eth1/49/1,
Eth1/49/2, Eth1/49/3
                                                    Eth1/49/4,
Eth1/50/1, Eth1/50/2
                                                    Eth1/50/3,
Eth1/50/4, Eth1/51/1
                                                    Eth1/51/2,
Eth1/51/3, Eth1/51/4
                                                    Eth1/52/1,
Eth1/52/2, Eth1/52/3
                                                    Eth1/52/4,
Eth1/53/1, Eth1/53/2
                                                    Eth1/53/3,
Eth1/53/4, Eth1/54/1
                                                    Eth1/54/2,
Eth1/54/3, Eth1/54/4
                                                    Eth1/55/1,
Eth1/55/2, Eth1/55/3
                                                    Eth1/55/4,
Eth1/56/1, Eth1/56/2
                                                    Eth1/56/3,
Eth1/56/4, Eth1/57/1
                                                    Eth1/57/2,
Eth1/57/3, Eth1/57/4
                                                    Eth1/58/1,
Eth1/58/2, Eth1/58/3
                                                    Eth1/58/4,
Eth1/59/1, Eth1/59/2
                                                    Eth1/59/3,
Eth1/59/4, Eth1/60/1
                                                    Eth1/60/2,
Eth1/60/3, Eth1/60/4
                                                    Eth1/61/1,
Eth1/61/2, Eth1/61/3
                                                    Eth1/61/4,
Eth1/62/1, Eth1/62/2
                                                    Eth1/62/3, Eth1/62/4
```

```
30   VLAN0030                         active    Eth1/1/1, Eth1/1/2,
Eth1/1/3
                                                Eth1/1/4, Eth1/2/1,
Eth1/2/2
                                                Eth1/2/3, Eth1/2/4,
Eth1/3/1
                                                Eth1/3/2, Eth1/3/3,
Eth1/3/4
                                                Eth1/4/1, Eth1/4/2,
Eth1/4/3
                                                Eth1/4/4, Eth1/5/1,
Eth1/5/2
                                                Eth1/5/3, Eth1/5/4,
Eth1/6/1
                                                Eth1/6/2, Eth1/6/3,
Eth1/6/4
                                                Eth1/7/1, Eth1/7/2,
Eth1/7/3
                                                Eth1/7/4, Eth1/8/1,
Eth1/8/2
                                                Eth1/8/3, Eth1/8/4,
Eth1/9/1
                                                Eth1/9/2, Eth1/9/3,
Eth1/9/4
                                                Eth1/10/1,
Eth1/10/2, Eth1/10/3
                                                Eth1/10/4,
Eth1/11/1, Eth1/11/2
                                                Eth1/11/3,
Eth1/11/4, Eth1/12/1
                                                Eth1/12/2,
Eth1/12/3, Eth1/12/4
                                                Eth1/13/1,
Eth1/13/2, Eth1/13/3
                                                Eth1/13/4,
Eth1/14/1, Eth1/14/2
                                                Eth1/14/3,
Eth1/14/4, Eth1/15/1
                                                Eth1/15/2,
Eth1/15/3, Eth1/15/4
                                                Eth1/16/1,
Eth1/16/2, Eth1/16/3
                                                Eth1/16/4,
Eth1/17/1, Eth1/17/2
                                                Eth1/17/3,
Eth1/17/4, Eth1/18/1
```

```
                                                    Eth1/18/2,
Eth1/18/3, Eth1/18/4
                                                    Eth1/19/1,
Eth1/19/2, Eth1/19/3
                                                    Eth1/19/4,
Eth1/20/1, Eth1/20/2
                                                    Eth1/20/3,
Eth1/20/4, Eth1/21/1
                                                    Eth1/21/2,
Eth1/21/3, Eth1/21/4
                                                    Eth1/22/1,
Eth1/22/2, Eth1/22/3
                                                    Eth1/22/4,
Eth1/23/1, Eth1/23/2
                                                    Eth1/23/3,
Eth1/23/4, Eth1/24/1
                                                    Eth1/24/2,
Eth1/24/3, Eth1/24/4
                                                    Eth1/25/1,
Eth1/25/2, Eth1/25/3
                                                    Eth1/25/4,
Eth1/26/1, Eth1/26/2
                                                    Eth1/26/3,
Eth1/26/4, Eth1/27/1
                                                    Eth1/27/2,
Eth1/27/3, Eth1/27/4
                                                    Eth1/28/1,
Eth1/28/2, Eth1/28/3
                                                    Eth1/28/4,
Eth1/29/1, Eth1/29/2
                                                    Eth1/29/3,
Eth1/29/4, Eth1/30/1
                                                    Eth1/30/2,
Eth1/30/3, Eth1/30/4
                                                    Eth1/31/1,
Eth1/31/2, Eth1/31/3
                                                    Eth1/31/4,
Eth1/32/1, Eth1/32/2
                                                    Eth1/32/3,
Eth1/32/4, Eth1/33/1
                                                    Eth1/33/2,
Eth1/33/3, Eth1/33/4
                                                    Eth1/34/1,
Eth1/34/2, Eth1/34/3
                                                    Eth1/34/4,
Eth1/35/1, Eth1/35/2
```

```
                                                    Eth1/35/3,
Eth1/35/4, Eth1/36/1
                                                    Eth1/36/2,
Eth1/36/3, Eth1/36/4
                                                    Eth1/37/1,
Eth1/37/2, Eth1/37/3
                                                    Eth1/37/4,
Eth1/38/1, Eth1/38/2
                                                    Eth1/38/3,
Eth1/38/4, Eth1/39/1
                                                    Eth1/39/2,
Eth1/39/3, Eth1/39/4
                                                    Eth1/40/1,
Eth1/40/2, Eth1/40/3
                                                    Eth1/40/4,
Eth1/41/1, Eth1/41/2
                                                    Eth1/41/3,
Eth1/41/4, Eth1/42/1
                                                    Eth1/42/2,
Eth1/42/3, Eth1/42/4
                                                    Eth1/43/1,
Eth1/43/2, Eth1/43/3
                                                    Eth1/43/4,
Eth1/44/1, Eth1/44/2
                                                    Eth1/44/3,
Eth1/44/4, Eth1/45/1
                                                    Eth1/45/2,
Eth1/45/3, Eth1/45/4
                                                    Eth1/46/1,
Eth1/46/2, Eth1/46/3
                                                    Eth1/46/4,
Eth1/47/1, Eth1/47/2
                                                    Eth1/47/3,
Eth1/47/4, Eth1/48/1
                                                    Eth1/48/2,
Eth1/48/3, Eth1/48/4
                                                    Eth1/49/1,
Eth1/49/2, Eth1/49/3
                                                    Eth1/49/4,
Eth1/50/1, Eth1/50/2
                                                    Eth1/50/3,
Eth1/50/4, Eth1/51/1
                                                    Eth1/51/2,
Eth1/51/3, Eth1/51/4
                                                    Eth1/52/1,
Eth1/52/2, Eth1/52/3
```

```
                                                  Eth1/52/4,
Eth1/53/1, Eth1/53/2
                                                  Eth1/53/3,
Eth1/53/4, Eth1/54/1
                                                  Eth1/54/2,
Eth1/54/3, Eth1/54/4
                                                  Eth1/55/1,
Eth1/55/2, Eth1/55/3
                                                  Eth1/55/4,
Eth1/56/1, Eth1/56/2
                                                  Eth1/56/3,
Eth1/56/4, Eth1/57/1
                                                  Eth1/57/2,
Eth1/57/3, Eth1/57/4
                                                  Eth1/58/1,
Eth1/58/2, Eth1/58/3
                                                  Eth1/58/4,
Eth1/59/1, Eth1/59/2
                                                  Eth1/59/3,
Eth1/59/4, Eth1/60/1
                                                  Eth1/60/2,
Eth1/60/3, Eth1/60/4
                                                  Eth1/61/1,
Eth1/61/2, Eth1/61/3
                                                  Eth1/61/4,
Eth1/62/1, Eth1/62/2
                                                  Eth1/62/3, Eth1/62/4
40   VLAN0040                         active    Eth1/1/1, Eth1/1/2,
Eth1/1/3
                                                  Eth1/1/4, Eth1/2/1,
Eth1/2/2
                                                  Eth1/2/3, Eth1/2/4,
Eth1/3/1
                                                  Eth1/3/2, Eth1/3/3,
Eth1/3/4
                                                  Eth1/4/1, Eth1/4/2,
Eth1/4/3
                                                  Eth1/4/4, Eth1/5/1,
Eth1/5/2
                                                  Eth1/5/3, Eth1/5/4,
Eth1/6/1
                                                  Eth1/6/2, Eth1/6/3,
Eth1/6/4
                                                  Eth1/7/1, Eth1/7/2,
Eth1/7/3
                                                  Eth1/7/4, Eth1/8/1,
```

```
Eth1/8/2
                                                    Eth1/8/3, Eth1/8/4,
Eth1/9/1
                                                    Eth1/9/2, Eth1/9/3,
Eth1/9/4
                                                    Eth1/10/1,
Eth1/10/2, Eth1/10/3
                                                    Eth1/10/4,
Eth1/11/1, Eth1/11/2
                                                    Eth1/11/3,
Eth1/11/4, Eth1/12/1
                                                    Eth1/12/2,
Eth1/12/3, Eth1/12/4
                                                    Eth1/13/1,
Eth1/13/2, Eth1/13/3
                                                    Eth1/13/4,
Eth1/14/1, Eth1/14/2
                                                    Eth1/14/3,
Eth1/14/4, Eth1/15/1
                                                    Eth1/15/2,
Eth1/15/3, Eth1/15/4
                                                    Eth1/16/1,
Eth1/16/2, Eth1/16/3
                                                    Eth1/16/4,
Eth1/17/1, Eth1/17/2
                                                    Eth1/17/3,
Eth1/17/4, Eth1/18/1
                                                    Eth1/18/2,
Eth1/18/3, Eth1/18/4
                                                    Eth1/19/1,
Eth1/19/2, Eth1/19/3
                                                    Eth1/19/4,
Eth1/20/1, Eth1/20/2
                                                    Eth1/20/3,
Eth1/20/4, Eth1/21/1
                                                    Eth1/21/2,
Eth1/21/3, Eth1/21/4
                                                    Eth1/22/1,
Eth1/22/2, Eth1/22/3
                                                    Eth1/22/4,
Eth1/23/1, Eth1/23/2
                                                    Eth1/23/3,
Eth1/23/4, Eth1/24/1
                                                    Eth1/24/2,
Eth1/24/3, Eth1/24/4
                                                    Eth1/25/1,
```

```
Eth1/25/2, Eth1/25/3
                                                    Eth1/25/4,
Eth1/26/1, Eth1/26/2
                                                    Eth1/26/3,
Eth1/26/4, Eth1/27/1
                                                    Eth1/27/2,
Eth1/27/3, Eth1/27/4
                                                    Eth1/28/1,
Eth1/28/2, Eth1/28/3
                                                    Eth1/28/4,
Eth1/29/1, Eth1/29/2
                                                    Eth1/29/3,
Eth1/29/4, Eth1/30/1
                                                    Eth1/30/2,
Eth1/30/3, Eth1/30/4
                                                    Eth1/31/1,
Eth1/31/2, Eth1/31/3
                                                    Eth1/31/4,
Eth1/32/1, Eth1/32/2
                                                    Eth1/32/3,
Eth1/32/4, Eth1/33/1
                                                    Eth1/33/2,
Eth1/33/3, Eth1/33/4
                                                    Eth1/34/1,
Eth1/34/2, Eth1/34/3
                                                    Eth1/34/4,
Eth1/35/1, Eth1/35/2
                                                    Eth1/35/3,
Eth1/35/4, Eth1/36/1
                                                    Eth1/36/2,
Eth1/36/3, Eth1/36/4
                                                    Eth1/37/1,
Eth1/37/2, Eth1/37/3
                                                    Eth1/37/4,
Eth1/38/1, Eth1/38/2
                                                    Eth1/38/3,
Eth1/38/4, Eth1/39/1
                                                    Eth1/39/2,
Eth1/39/3, Eth1/39/4
                                                    Eth1/40/1,
Eth1/40/2, Eth1/40/3
                                                    Eth1/40/4,
Eth1/41/1, Eth1/41/2
                                                    Eth1/41/3,
Eth1/41/4, Eth1/42/1
                                                    Eth1/42/2,
```

```
Eth1/42/3, Eth1/42/4
                                                    Eth1/43/1,
Eth1/43/2, Eth1/43/3
                                                    Eth1/43/4,
Eth1/44/1, Eth1/44/2
                                                    Eth1/44/3,
Eth1/44/4, Eth1/45/1
                                                    Eth1/45/2,
Eth1/45/3, Eth1/45/4
                                                    Eth1/46/1,
Eth1/46/2, Eth1/46/3
                                                    Eth1/46/4,
Eth1/47/1, Eth1/47/2
                                                    Eth1/47/3,
Eth1/47/4, Eth1/48/1
                                                    Eth1/48/2,
Eth1/48/3, Eth1/48/4
                                                    Eth1/49/1,
Eth1/49/2, Eth1/49/3
                                                    Eth1/49/4,
Eth1/50/1, Eth1/50/2
                                                    Eth1/50/3,
Eth1/50/4, Eth1/51/1
                                                    Eth1/51/2,
Eth1/51/3, Eth1/51/4
                                                    Eth1/52/1,
Eth1/52/2, Eth1/52/3
                                                    Eth1/52/4,
Eth1/53/1, Eth1/53/2
                                                    Eth1/53/3,
Eth1/53/4, Eth1/54/1
                                                    Eth1/54/2,
Eth1/54/3, Eth1/54/4
                                                    Eth1/55/1,
Eth1/55/2, Eth1/55/3
                                                    Eth1/55/4,
Eth1/56/1, Eth1/56/2
                                                    Eth1/56/3,
Eth1/56/4, Eth1/57/1
                                                    Eth1/57/2,
Eth1/57/3, Eth1/57/4
                                                    Eth1/58/1,
Eth1/58/2, Eth1/58/3
                                                    Eth1/58/4,
Eth1/59/1, Eth1/59/2
                                                    Eth1/59/3,
```

```
Eth1/59/4, Eth1/60/1
                                                    Eth1/60/2,
Eth1/60/3, Eth1/60/4
                                                    Eth1/61/1,
Eth1/61/2, Eth1/61/3
                                                    Eth1/61/4,
Eth1/62/1, Eth1/62/2
                                                    Eth1/62/3, Eth1/62/4

cs1# show interface trunk

--------------------------------------------------------
Port          Native  Status        Port
              Vlan                  Channel
--------------------------------------------------------
Eth1/1/1      1       trunking      --
Eth1/1/2      1       trunking      --
Eth1/1/3      1       trunking      --
Eth1/1/4      1       trunking      --
Eth1/2/1      1       trunking      --
Eth1/2/2      1       trunking      --
Eth1/2/3      1       trunking      --
Eth1/2/4      1       trunking      --
.
.
.
Eth1/62/2     none
Eth1/62/3     none
Eth1/62/4     none
Eth1/63       none
Eth1/64       none
Po1           1
```

For specific port and VLAN usage details, refer to the banner and important notes section in your RCF.

3. Verify that the ISL between cs1 and cs2 is functional:

```
show port-channel summary
```

Show example

```
cs1# show port-channel summary
Flags:  D - Down        P - Up in port-channel (members)
        I - Individual  H - Hot-standby (LACP only)
        s - Suspended   r - Module-removed
        b - BFD Session Wait
        S - Switched    R - Routed
        U - Up (port-channel)
        p - Up in delay-lacp mode (member)
        M - Not in use. Min-links not met
--------------------------------------------------------------------------
------------
Group Port-       Type     Protocol  Member Ports
      Channel
--------------------------------------------------------------------------
------------
1     Po1(SU)     Eth      LACP      Eth1/63(P)   Eth1/64(P)
999   Po999(SD)   Eth      NONE      --
cs1#
```

Step 3: Set up your ONTAP cluster

NetApp recommends that you use System Manager to set up new clusters.

System Manager provides a simple and easy workflow for cluster set up and configuration including assigning a node management IP address, initializing the cluster, creating a local tier, configuring protocols and provisioning initial storage.

Go to Configure ONTAP on a new cluster with System Manager for setup instructions.

What's next?

After you've installed the RCF, you verify the SSH configuration.

Upgrade your Reference Configuration File (RCF)

You upgrade your RCF version when you have an existing version of the RCF file installed on your operational switches.

Before you begin

Make sure you have the following:

- A current backup of the switch configuration.
- A fully functioning cluster (no errors in the logs or similar issues).
- The current RCF.
- If you are updating your RCF version, you need a boot configuration in the RCF that reflects the desired

boot images.

If you need to change the boot configuration to reflect the current boot images, you must do so before reapplying the RCF so that the correct version is instantiated on future reboots.

No operational inter-switch link (ISL) is needed during this procedure. This is by design because RCF version changes can affect ISL connectivity temporarily. To ensure non-disruptive cluster operations, the following procedure migrates all of the cluster LIFs to the operational partner switch while performing the steps on the target switch.

Before installing a new switch software version and RCFs, you must erase the switch settings and perform basic configuration. You must be connected to the switch using the serial console or have preserved basic configuration information prior to erasing the switch settings.

Step 1: Prepare for the upgrade

1. If AutoSupport is enabled on this cluster, suppress automatic case creation by invoking an AutoSupport message:

   ```
   system node autosupport invoke -node * -type all -message MAINT=xh
   ```

   where *x* is the duration of the maintenance window in hours.

2. Change the privilege level to advanced, entering **y** when prompted to continue:

   ```
   set -privilege advanced
   ```

   The advanced prompt (*>) appears.

3. Display the cluster ports on each node that are connected to the switches:

   ```
   network device-discovery show
   ```

Show example

```
cluster1::*> network device-discovery show
Node/       Local  Discovered
Protocol    Port   Device (LLDP: ChassisID)  Interface
Platform
----------- ------ ------------------------- ----------------
--------
node1-01/cdp
            e10a   cs1(FLMXXXXXXXX)         Ethernet1/16/3    N9K-
C9364D-GX2A
            e10b   cs1(FDOXXXXXXXX)         Ethernet1/13/3    N9K-
C9364D-GX2A
            e11a   cs1(FLMXXXXXXXX)         Ethernet1/16/4    N9K-
C9364D-GX2A
            e11b   cs1(FDOXXXXXXXX)         Ethernet1/13/4    N9K-
C9364D-GX2A
            e1a    cs1(FLMXXXXXXXX)         Ethernet1/16/1    N9K-
C9364D-GX2A
            e1b    cs1(FDOXXXXXXXX)         Ethernet1/13/1    N9K-
C9364D-GX2A
            .
            .
            .
            e7a    cs1(FLMXXXXXXXX)         Ethernet1/16/2    N9K-
C9364D-GX2A
            e7b    cs1(FDOXXXXXXXX)         Ethernet1/13/2    N9K-
C9364D-GX2A
node1-01/lldp
            e10a   cs1 (c8:60:8f:xx:xx:xx)   Ethernet1/16/3    -
            e10b   cs2 (04:e3:87:xx:xx:xx)   Ethernet1/16/3    -
            e11a   cs1 (c8:60:8f:xx:xx:xx)   Ethernet1/16/4    -
            e11b   cs2 (04:e3:87:xx:xx:xx)   Ethernet1/16/4    -
            e1a    cs1 (c8:60:8f:xx:xx:xx)   Ethernet1/16/1    -
            e1b    cs2 (04:e3:87:xx:xx:xx)   Ethernet1/16/1    -
            .
            .
            .
            e7a    cs1 (c8:60:8f:xx:xx:xx)   Ethernet1/16/2    -
            e7b    cs2 (04:e3:87:xx:xx:xx)   Ethernet1/16/2    -
.
.
.
```

4. Check the administrative and operational status of each port.
    a. **Cluster ports**
        i. Verify that all the cluster ports are up with a healthy status:

```
network port show -ipspace Cluster
```

Show example

```
cluster1::*> network port show -ipspace Cluster

Node: node1-01

Ignore
                                                  Speed(Mbps)
Health   Health
Port      IPspace      Broadcast Domain Link MTU  Admin/Oper
Status   Status
--------- ------------ ---------------- ---- ---- -----------
-------- ------
e7a       Cluster      Cluster          up   9000  auto/100000
healthy false
e7b       Cluster      Cluster          up   9000  auto/100000
healthy false

Node:node1-02

Ignore
                                                  Speed(Mbps)
Health   Health
Port      IPspace      Broadcast Domain Link MTU  Admin/Oper
Status   Status
--------- ------------ ---------------- ---- ---- -----------
-------- ------
e7a       Cluster      Cluster          up   9000  auto/100000
healthy false
e7b       Cluster      Cluster          up   9000  auto/100000
healthy false

Node: node1-03


Ignore
                                                  Speed(Mbps)
Health   Health
Port      IPspace      Broadcast Domain Link MTU  Admin/Oper
Status   Status
--------- ------------ ---------------- ---- ---- -----------
-------- ------
e7a       Cluster      Cluster          up   9000  auto/10000
healthy  false
e7b       Cluster      Cluster          up   9000  auto/10000
healthy  false
```

```
Node: node1-04

Ignore
                                                          Speed(Mbps)
Health   Health
Port      IPspace      Broadcast Domain Link MTU  Admin/Oper
Status   Status
--------- ------------ ---------------- ---- ---- -----------
-------- ------
e7a       Cluster      Cluster          up   9000  auto/10000
healthy  false
e7b       Cluster      Cluster          up   9000  auto/10000
healthy  false
cluster1::*>
```

ii. Verify that all the cluster interfaces (LIFs) are on the home port:

```
network interface show -role cluster
```

Show example

```
cluster1::*> network interface show -role cluster
            Logical          Status      Network
Current      Current Is
Vserver     Interface        Admin/Oper  Address/Mask
Node         Port    Home
----------- ---------------- ----------- -----------------
------------ ------- ----
Cluster
            node1-01_clus1   up/up       169.254.3.4/23
node1-01     e7a     true
            node1-01_clus2   up/up       169.254.3.5/23
node1-01     e7b     true
            node1-02_clus1   up/up       169.254.3.8/23
node1-02     e7a     true
            node1-02_clus2   up/up       169.254.3.9/23
node1-02     e7b     true
            node1-03_clus1   up/up       169.254.1.3/23
node1-03     e7a     true
            node1-03_clus2   up/up       169.254.1.1/23
node1-03     e7b     true
            node1-04_clus1   up/up       169.254.1.6/23
node1-04     e7a     true
            node1-04_clus2   up/up       169.254.1.7/23
node1-04     e7b     true
8 entries were displayed.
```

iii. Verify that the cluster displays information for both switches:

```
system cluster-switch show -is-monitoring-enabled-operational true
```

Show example

```
cluster1::*> system cluster-switch show -is-monitoring-enabled
-operational true
Switch                      Type               Address
Model
--------------------------- ------------------
--------------- -----
cs1(FDOXXXXXXXX)            cluster-network    10.228.137.233
N9K-C9364D-GX2A
     Serial Number: FDOXXXXXXXX
      Is Monitored: true
            Reason: None
  Software Version: Cisco Nexus Operating System (NX-OS)
Software, Version
                    10.4(2)
    Version Source: CDP/ISDP

cs2(FLMXXXXXXXX)            cluster-network    10.228.137.234
N9K-C9364D-GX2A
     Serial Number: FLMXXXXXXXX
      Is Monitored: true
            Reason: None
  Software Version: Cisco Nexus Operating System (NX-OS)
Software, Version
                    10.4(2)
    Version Source: CDP/ISDP
```

b. **HA ports**

i. Verify that all the HA ports are up with a healthy status:

```
ha interconnect status show -node <node-name>
```

Show example

```
cluster1::*> ha interconnect status show -node node1-01
  (system ha interconnect status show)

                        Node: node1-01
              Link 0 Status: up
              Link 1 Status: up
           Is Link 0 Active: true
           Is Link 1 Active: true
         IC RDMA Connection: up
                        Slot: 0
             Debug Firmware: no


Interconnect Port 0 :
                   Port Name: e1a-17
                         MTU: 4096
           Link Information: ACTIVE


Interconnect Port 1 :
                   Port Name: e1b-18
                         MTU: 4096
           Link Information: ACTIVE

cluster1::*> ha interconnect status show -node node1-01
  (system ha interconnect status show)

                        Node: node1-01
              Link 0 Status: up
              Link 1 Status: up
           Is Link 0 Active: true
           Is Link 1 Active: true
         IC RDMA Connection: up
                        Slot: 0
             Debug Firmware: no


Interconnect Port 0 :
                   Port Name: e1a-17
                         MTU: 4096
           Link Information: ACTIVE


Interconnect Port 1 :
```

```
                  Port Name: e1b-18
                        MTU: 4096
           Link Information: ACTIVE
.
.
.
```

c. **Storage ports**

i. Verify that all the storage ports are up with a healthy status:

```
storage port show -port-type ENET
```

Show example

```
cluster1::*> storage port show -port-type ENET


                                     Speed
Node                Port Type  Mode    (Gb/s) State    Status
------------------ ---- ----- ------- ------ --------
-----------
node1-01
                    e10a ENET  -          100 enabled  online
                    e10b ENET  -          100 enabled  online
                    e11a ENET  -          100 enabled  online
                    e11b ENET  -          100 enabled  online
node1-02
                    e10a ENET  -          100 enabled  online
                    e10b ENET  -          100 enabled  online
                    e11a ENET  -          100 enabled  online
                    e11b ENET  -          100 enabled  online
node1-03
                    e10a ENET  -          100 enabled  online
                    e10b ENET  -          100 enabled  online
                    e11a ENET  -          100 enabled  online
node1-04
                    e10a ENET  -          100 enabled  online
                    e10b ENET  -          100 enabled  online
                    e11a ENET  -          100 enabled  online
                    e11b ENET  -          100 enabled  online
16 entries were displayed.
```

d. **Storage shelf ports**

i. Verify that all the storage shelf ports are up with a healthy status:

```
storage shelf port show
```

Show example

```
cluster1::*> storage shelf port show

Shelf ID Module State        Internal?
----- -- ------ ------------ ---------
1.1
       0 A      connected    false
       1 A      connected    false
       2 A      connected    false
       3 A      connected    false
       4 A      connected    false
       5 A      connected    false
       6 A      connected    false
       7 A      connected    false
       8 B      connected    false
       9 B      connected    false
      10 B      connected    false
      11 B      connected    false
      12 B      connected    false
      13 B      connected    false
      14 B      connected    false
      15 B      connected    false

16 entries were displayed.
```

ii. Verify the connection status of all the storage shelf ports:

```
storage shelf port show -fields remote-device,remote-
port,connector-state
```

Show example

```
cluster1::*> storage shelf port show -fields remote-
device,remote-port,connector-state

shelf id connector-state remote-port    remote-device
----- -- -------------- -------------- -----------------
1.1   0  connected       Ethernet1/17/1 CX9332D-cs1
1.1   1  connected       Ethernet1/15/1 CX9364D-cs1
1.1   2  connected       Ethernet1/17/2 CX9332D-cs1
1.1   3  connected       Ethernet1/15/2 CX9364D-cs1
1.1   4  connected       Ethernet1/17/3 CX9332D-cs1
1.1   5  connected       Ethernet1/15/3 CX9364D-cs1
1.1   6  connected       Ethernet1/17/4 CX9332D-cs1
1.1   7  connected       Ethernet1/15/4 CX9364D-cs1
1.1   8  connected       Ethernet1/19/1 CX9332D-cs1
1.1   9  connected       Ethernet1/17/1 CX9364D-cs1
1.1   10 connected       Ethernet1/19/2 CX9332D-cs1
1.1   11 connected       Ethernet1/17/2 CX9364D-cs1
1.1   12 connected       Ethernet1/19/3 CX9332D-cs1
1.1   13 connected       Ethernet1/17/3 CX9364D-cs1
1.1   14 connected       Ethernet1/19/4 CX9332D-cs1
1.1   15 connected       Ethernet1/17/4 CX9364D-cs1

16 entries were displayed.
```

5. Disable auto-revert on the cluster LIFs:

   ```
   network interface modify -vserver Cluster -lif * -auto-revert false
   ```

Step 2: Configure ports

1. On switch cs1, shut down the ports connected to all the ports of the nodes.

```
cs1# config
cs1(config)# interface e1/1/1-4,e1/2/1-4,e1/3/1-4,e1/4/1-4,e1/5/1-
4,e1/6/1-4,e1/7/1-4,e1/8/1-4
cs1(config-if-range)# shutdown
cs1(config)# interface e1/9/1-4,e1/10/1-4,e1/11/1-4,e1/12/1-4,e1/13/1-
4,e1/14/1-4,e1/15/1-4,e1/16/1-4
cs1(config-if-range)# shutdown
cs1(config)# interface e1/17/1-4,e1/18/1-4,e1/19/1-4,e1/20/1-4,e1/21/1-
4,e1/22/1-4,e1/23/1-4,e1/24/1-4
cs1(config-if-range)# shutdown
cs1(config)# interface e1/25/1-4,e1/26/1-4,e1/27/1-4,e1/28/1-4,e1/29/1-
4,e1/30/1-4,e1/31/1-4,e1/32/1-4
cs1(config-if-range)# shutdown
cs1(config)# interface e1/33/1-4,e1/34/1-4,e1/35/1-4,e1/36/1-4,e1/37/1-
4,e1/38/1-4,e1/39/1-4,e1/40/1-4
cs1(config-if-range)# shutdown
cs1(config)# interface e1/41/1-4,e1/42/1-4,e1/43/1-4,e1/44/1-4,e1/35/1-
4,e1/46/1-4,e1/47/1-4,e1/48/1-4
cs1(config-if-range)# shutdown
cs1(config)# interface e1/49/1-4,e1/50/1-4,e1/51/1-4,e1/52/1-4,e1/53/1-
4,e1/54/1-4,e1/55/1-4,e1/56/1-4
cs1(config-if-range)# shutdown
cs1(config)# interface e1/57/1-4,e1/58/1-4,e1/59/1-4,e1/60/1-4,e1/61/1-
4,e1/62/1-4
cs1(config-if-range)# shutdown
cs1(config-if-range)# exit
cs1(config)# exit
```

Make sure to shutdown **all** connected ports to avoid any network connection issues. See the Knowledge Base article Node out of quorum when migrating cluster LIF during switch OS upgrade for further details.

2. Verify that the cluster LIFs have failed over to the ports hosted on cluster switch cs1. This might take a few seconds.

```
network interface show -role cluster
```

Show example

```
cluster1::*> network interface show -role cluster
            Logical           Status     Network            Current
Current Is
Vserver     Interface         Admin/Oper Address/Mask       Node
Port    Home
----------- ----------------- ---------- ------------------
------------ ------- ----
Cluster
            node1-01_clus1    up/up      169.254.36.44/16   node1-01
e7a     true
            node1-01_clus2    up/up      169.254.7.5/16     node1-01
e7b     true
            node1-02_clus1    up/up      169.254.197.206/16 node1-02
e7a     true
            node1-02_clus2    up/up      169.254.195.186/16 node1-02
e7b     true
            node1-03_clus1    up/up      169.254.192.49/16  node1-03
e7a     true
            node1-03_clus2    up/up      169.254.182.76/16  node1-03
e7b     true
            node1-04_clus1    up/up      169.254.59.49/16   node1-04
e7a     true
            node1-04_clus2    up/up      169.254.62.244/16  node1-04
e7b     true
8 entries were displayed.
```

3. Verify that the cluster is healthy:

```
cluster show
```

Show example

```
cluster1::*> cluster show
Node              Health  Eligibility   Epsilon
----------------- ------- ------------  -------
node1-01          true    true          false
node1-02          true    true          false
node1-03          true    true          true
node1-04          true    true          false
4 entries were displayed.
```

4. If you have not already done so, save a copy of the current switch configuration by copying the output of the following command to a text file:

   `show running-config`

   a. Record any custom additions between the current `running-config` and the RCF file in use (such as an SNMP configuration for your organization).

   b. For NX-OS 10.2 and newer use the `show diff running-config` command to compare with the saved RCF file in the bootflash. Otherwise, use a third part diff/compare tool.

5. Save basic configuration details to the `write_erase.cfg` file on the bootflash.

   Make sure to configure the following:

   - Username and password
   - Management IP address
   - Default gateway
   - Switch name

```
cs1# show run | i "username admin password" > bootflash:write_erase.cfg

cs1# show run | section "vrf context management" >> bootflash:write_erase.cfg

cs1# show run | section "interface mgmt0" >> bootflash:write_erase.cfg

cs1# show run | section "switchname" >> bootflash:write_erase.cfg

cs1# echo "hardware access-list tcam region ing-racl 1024" >>
bootflash:write_erase.cfg

cs1# echo "hardware access-list tcam region egr-racl 1024" >>
bootflash:write_erase.cfg

cs1# echo "hardware access-list tcam region ing-l2-qos 1536" >>
bootflash:write_erase.cfg
```

   See the Knowledge Base article How to clear configuration on a Cisco interconnect switch while retaining remote connectivity for further details.

6. Verify that the `write_erase.cfg` file is populated as expected:

```
show file bootflash:write_erase.cfg
```

7. Issue the `write erase` command to erase the current saved configuration:

```
cs1# write erase

Warning: This command will erase the startup-configuration.

Do you wish to proceed anyway? (y/n) [n] y
```

8. Copy the previously saved basic configuration into the startup configuration.

   ```
   cs1# copy bootflash:write_erase.cfg startup-config
   ```

9. Reboot the switch:

   ```
   cs1# reload

   This command will reboot the system. (y/n)? [n] y
   ```

10. After the management IP address is reachable again, log in to the switch through SSH.

    You may need to update host file entries related to the SSH keys.

11. Copy the RCF to the bootflash of switch cs1 using one of the following transfer protocols: FTP, TFTP, SFTP, or SCP.

    For more information on Cisco commands, see the appropriate guide in the Cisco Nexus 9000 Series NX-OS Command Reference guides.

    Show example

    This example shows TFTP being used to copy an RCF to the bootflash on switch cs1:

    ```
    cs1# copy tftp: bootflash: vrf management
    Enter source filename: NX9364D-GX2A-RCF-v10.0-Shared.txt
    Enter hostname for the tftp server: 172.22.201.50
    Trying to connect to tftp server......Connection to Server
    Established.
    TFTP get operation was successful
    Copy complete, now saving to disk (please wait)...
    ```

12. Apply the RCF previously downloaded to the bootflash.

    For more information on Cisco commands, see the appropriate guide in the Cisco Nexus 9000 Series NX-OS Command Reference guides.

    This example shows the RCF file `NX9364D-GX2A-RCF-v10.0-Shared.txt` being installed on switch cs1:

    ```
    cs1# copy NX9364D-GX2A-RCF-v10.0-Shared.txt running-config echo-commands
    ```

    Make sure to read thoroughly the **Installation notes**, **Important Notes**, and **banner** sections of your RCF. You must read and follow these instructions to ensure the proper configuration and operation of the switch.

13. Verify that the RCF file is the correct newer version:

```
show running-config
```

When you check the output to verify you have the correct RCF, make sure that the following information is correct:

- The RCF banner
- The node and port settings
- Customizations

  The output varies according to your site configuration. Check the port settings and refer to the release notes for any changes specific to the RCF that you have installed.

14. Reapply any previous customizations to the switch configuration.
15. After you verify the RCF versions, custom additions, and switch settings are correct, copy the running-config file to the startup-config file.

    For more information on Cisco commands, see the appropriate guide in the Cisco Nexus 9000 Series NX-OS Command Reference guides.

    ```
    cs1# copy running-config startup-config

    [] 100% Copy complete
    ```

16. Reboot switch cs1. You can ignore the “cluster switch health monitor” alerts and “cluster ports down” events reported on the nodes while the switch reboots.

    ```
    cs1# reload

    This command will reboot the system. (y/n)? [n] y
    ```

17. Verify the health of the ports on the cluster.
    a. **Cluster ports**
        i. Verify that cluster ports are up and healthy across all nodes in the cluster:

        ```
        network port show -ipspace Cluster
        ```

Show example

```
cluster1::*> network port show -ipspace Cluster

Node: node1-01

Ignore
                                                  Speed(Mbps)
Health   Health
Port      IPspace      Broadcast Domain Link MTU  Admin/Oper
Status   Status
--------- ------------ ---------------- ---- ---- -----------
-------- ------
e7a       Cluster      Cluster          up   9000  auto/10000
healthy  false
e7b       Cluster      Cluster          up   9000  auto/10000
healthy  false

Node: node1-02

Ignore
                                                  Speed(Mbps)
Health   Health
Port      IPspace      Broadcast Domain Link MTU  Admin/Oper
Status   Status
--------- ------------ ---------------- ---- ---- -----------
-------- ------
e7a       Cluster      Cluster          up   9000  auto/10000
healthy  false
e7b       Cluster      Cluster          up   9000  auto/10000
healthy  false

Node: node1-03

Ignore
                                                  Speed(Mbps)
Health   Health
Port      IPspace      Broadcast Domain Link MTU  Admin/Oper
Status   Status
--------- ------------ ---------------- ---- ---- -----------
-------- ------
e7a       Cluster      Cluster          up   9000  auto/100000
healthy false
e7b       Cluster      Cluster          up   9000  auto/100000
healthy false
```

```
Node: node1-04

Ignore
                                                          Speed(Mbps)
Health   Health
Port      IPspace      Broadcast Domain Link MTU  Admin/Oper
Status   Status
--------- ------------ ---------------- ---- ---- -----------
-------- ------
e7a       Cluster      Cluster          up   9000  auto/100000
healthy false
e7b       Cluster      Cluster          up   9000  auto/100000
healthy false
8 entries were displayed.
```

ii. Verify the switch health from the cluster.

```
network device-discovery show -protocol cdp
```

```
system cluster-switch show -is-monitoring-enabled-operational true
```

Show example

```
cluster1::*> network device-discovery show -protocol cdp
Node/       Local  Discovered
Protocol    Port   Device (LLDP: ChassisID)  Interface
Platform
----------- ------ ------------------------- -----------------
--------
node1-01/cdp
            e10a   cs1(FLMXXXXXXXX)          Ethernet1/16/3
N9K-C9364D-GX2A
            e10b   cs2(FDOXXXXXXXX)          Ethernet1/13/3
N9K-C9364D-GX2A
            e11a   cs1(FLMXXXXXXXX)          Ethernet1/16/4
N9K-C9364D-GX2A
            e11b   cs2(FDOXXXXXXXX)          Ethernet1/13/4
N9K-C9364D-GX2A
            e1a    cs1(FLMXXXXXXXX)          Ethernet1/16/1
N9K-C9364D-GX2A
            e1b    cs2(FLMXXXXXXXX)          Ethernet1/13/1
N9K-C9364D-GX2A
            .
            .
            .
            e7a    cs1(FLMXXXXXXXX)          Ethernet1/16/2
N9K-C9364D-GX2A
            e7b    cs2(FDOXXXXXXXX)          Ethernet1/13/2
N9K-C9364D-GX2A
node1-02/cdp
.
.
.

cluster1::*> system cluster-switch show -is-monitoring-enabled
-operational true
Switch                      Type               Address
Model
--------------------------- ------------------
--------------- -----
cs2(FDOXXXXXXXX)            cluster-network    10.228.137.233
N9K-C9364D-GX2A
     Serial Number: FDOXXXXXXXX
      Is Monitored: true
            Reason: None
  Software Version: Cisco Nexus Operating System (NX-OS)
Software, Version
```

```
                    10.4(2)
    Version Source: CDP/ISDP

cs1(FLMXXXXXXXX)            cluster-network    10.228.137.234
N9K-C9364D-GX2A
     Serial Number: FLMXXXXXXXX
      Is Monitored: true
            Reason: None
  Software Version: Cisco Nexus Operating System (NX-OS)
Software, Version
                    10.4(2)
    Version Source: CDP/ISDP

2 entries were displayed.
```

b. **HA ports**

   i. Verify that all the HA ports are up with a healthy status:

   ```
   ha interconnect status show -node <node-name>
   ```

Show example

```
cluster1::*> ha interconnect status show -node node1-01
  (system ha interconnect status show)

                        Node: node1-01
                Link 0 Status: up
                Link 1 Status: up
            Is Link 0 Active: true
            Is Link 1 Active: true
          IC RDMA Connection: up
                        Slot: 0
               Debug Firmware: no


Interconnect Port 0 :
                   Port Name: e1a-17
                         MTU: 4096
             Link Information: ACTIVE


Interconnect Port 1 :
                   Port Name: e1b-18
                         MTU: 4096
             Link Information: ACTIVE

cluster1::*> ha interconnect status show -node node1-02
  (system ha interconnect status show)

                        Node: node1-02
                Link 0 Status: up
                Link 1 Status: up
            Is Link 0 Active: true
            Is Link 1 Active: true
          IC RDMA Connection: up
                        Slot: 0
               Debug Firmware: no


Interconnect Port 0 :
                   Port Name: e1a-17
                         MTU: 4096
             Link Information: ACTIVE


Interconnect Port 1 :
```

```
                  Port Name: e1b-18
                        MTU: 4096
           Link Information: ACTIVE
.
.
.
```

c. **Storage ports**

i. Verify that all the storage ports are up with a healthy status:

```
storage port show -port-type ENET
```

Show example

```
cluster1::*> storage port show -port-type ENET


                                     Speed
Node                Port Type  Mode    (Gb/s) State    Status
------------------ ---- ----- ------- ------ --------
-----------
node1-01
                    e10a ENET  -          100 enabled  online
                    e10b ENET  -          100 enabled  online
                    e11a ENET  -          100 enabled  online
                    e11b ENET  -          100 enabled  online
node1-02
                    e10a ENET  -          100 enabled  online
                    e10b ENET  -          100 enabled  online
                    e11a ENET  -          100 enabled  online
                    e11b ENET  -          100 enabled  online
node1-03
                    e10a ENET  -          100 enabled  online
                    e10b ENET  -          100 enabled  online
                    e11a ENET  -          100 enabled  online
node1-04
                    e10a ENET  -          100 enabled  online
                    e10b ENET  -          100 enabled  online
                    e11a ENET  -          100 enabled  online
                    e11b ENET  -          100 enabled  online
16 entries were displayed.
```

d. **Storage shelf ports**

i. Verify that all the storage shelf ports are up with a healthy status:

```
storage shelf port show
```

Show example

```
cluster1::*> storage shelf port show

Shelf ID Module State        Internal?
-------- -- ------ ---------- ---------
1.1
         0 A      connected    false
         1 A      connected    false
         2 A      connected    false
         3 A      connected    false
         4 A      connected    false
         5 A      connected    false
         6 A      connected    false
         7 A      connected    false
         8 B      connected    false
         9 B      connected    false
        10 B      connected    false
        11 B      connected    false
        12 B      connected    false
        13 B      connected    false
        14 B      connected    false
        15 B      connected    false

16 entries were displayed.
```

ii. Verify the connection status of all the storage shelf ports:

```
storage shelf port show -fields remote-device,remote-
port,connector-state
```

Show example

```
cluster1::*> storage shelf port show -fields remote-
device,remote-port,connector-state

shelf id connector-state remote-port    remote-device
----- -- -------------- -------------- -----------------
1.1   0  connected       Ethernet1/17/1 CX9332D-cs1
1.1   1  connected       Ethernet1/15/1 CX9364D-cs1
1.1   2  connected       Ethernet1/17/2 CX9332D-cs1
1.1   3  connected       Ethernet1/15/2 CX9364D-cs1
1.1   4  connected       Ethernet1/17/3 CX9332D-cs1
1.1   5  connected       Ethernet1/15/3 CX9364D-cs1
1.1   6  connected       Ethernet1/17/4 CX9332D-cs1
1.1   7  connected       Ethernet1/15/4 CX9364D-cs1
1.1   8  connected       Ethernet1/19/1 CX9332D-cs1
1.1   9  connected       Ethernet1/17/1 CX9364D-cs1
1.1   10 connected       Ethernet1/19/2 CX9332D-cs1
1.1   11 connected       Ethernet1/17/2 CX9364D-cs1
1.1   12 connected       Ethernet1/19/3 CX9332D-cs1
1.1   13 connected       Ethernet1/17/3 CX9364D-cs1
1.1   14 connected       Ethernet1/19/4 CX9332D-cs1
1.1   15 connected       Ethernet1/17/4 CX9364D-cs1

16 entries were displayed.
```

18. Verify that the cluster is healthy:

    `cluster show`

    Show example

    ```
    cluster1::*> cluster show
    Node                 Health   Eligibility   Epsilon
    -------------------- -------- ------------- -------
    node1-01             true     true          false
    node1-02             true     true          false
    node1-03             true     true          true
    node1-04             true     true          false
    4 entries were displayed.
    ```

19. Repeat steps 4 to 18 on switch cs2.
20. Enable auto-revert on the cluster LIFs:

```
network interface modify -vserver Cluster -lif * -auto-revert True
```

Step 3: Verify the cluster network configuration and cluster health

1. Verify that the switch ports connected to the cluster ports are up.

   ```
   show interface brief
   ```

   Show example

```
cs1# show interface brief | grep up
.
.
Eth1/9/3        1       eth  trunk  up      none
100G(D) --
Eth1/9/4        1       eth  trunk  up      none
100G(D) --
Eth1/15/1       1       eth  trunk  up      none
100G(D) --
Eth1/15/2       1       eth  trunk  up      none
100G(D) --
Eth1/15/3       1       eth  trunk  up      none
100G(D) --
Eth1/15/4       1       eth  trunk  up      none
100G(D) --
Eth1/16/1       1       eth  trunk  up      none
100G(D) --
Eth1/16/2       1       eth  trunk  up      none
100G(D) --
Eth1/16/3       1       eth  trunk  up      none
100G(D) --
Eth1/16/4       1       eth  trunk  up      none
100G(D) --
Eth1/17/1       1       eth  trunk  up      none
100G(D) --
Eth1/17/2       1       eth  trunk  up      none
100G(D) --
Eth1/17/3       1       eth  trunk  up      none
100G(D) --
Eth1/17/4       1       eth  trunk  up      none
100G(D) --
.
.
.
```

2. Verify that the expected nodes are still connected:

```
show cdp neighbors
```

Show example

```
cs1# show cdp neighbors

Capability Codes: R - Router, T - Trans-Bridge, B - Source-Route-
Bridge
                  S - Switch, H - Host, I - IGMP, r - Repeater,
                  V - VoIP-Phone, D - Remotely-Managed-Device,
                  s - Supports-STP-Dispute

Device-ID          Local Intrfce  Hldtme Capability  Platform
Port ID
cs2(FDOXXXXXXXX)    Eth1/63        179    R S I s   N9K-C9332D-GX2B
Eth1/31
cs2(FDOXXXXXXXX)    Eth1/64        179    R S I s   N9K-C9332D-GX2B
Eth1/32
node1-01            Eth1/4/1       123    H         AFX-1K
e1a
node1-01            Eth1/4/2       123    H         AFX-1K
e7a
node1-01            Eth1/4/3       123    H         AFX-1K
e10a
node1-01            Eth1/4/4       123    H         AFX-1K
e11a
node1-02            Eth1/9/1       138    H         AFX-1K
e1a
node1-02            Eth1/9/2       138    H         AFX-1K
e7a
node1-02            Eth1/9/3       138    H         AFX-1K
e10a
node1-02            Eth1/9/4       138    H         AFX-1K
e11a
node1-03            Eth1/15/1      138    H         AFX-1K
e1a
node1-03            Eth1/15/2      138    H         AFX-1K
e7a
node1-03            Eth1/15/3      138    H         AFX-1K
e10a
node1-03            Eth1/15/4      138    H         AFX-1K
e11a
node1-04            Eth1/16/1      173    H         AFX-1K
e1a
node1-04            Eth1/16/2      173    H         AFX-1K
e7a
node1-04            Eth1/16/3      173    H         AFX-1K
e10a
```

```
node1-04            Eth1/16/4      173    H         AFX-1K
e11a

Total entries displayed: 18
```

3. Verify that the cluster nodes are in their correct cluster VLANs using the following commands:

   `show vlan brief`

   `show interface trunk`

Show example

```
cs1# show vlan brief

VLAN Name                              Status    Ports
---- --------------------------------- ---------
------------------------------
1    default                           active    Po1, Po999, Eth1/63,
Eth1/64
                                                 Eth1/65, Eth1/66,
Eth1/1/1
                                                 Eth1/1/2, Eth1/1/3,
Eth1/1/4
                                                 Eth1/2/1, Eth1/2/2,
Eth1/2/3
                                                 Eth1/2/4, Eth1/3/1,
Eth1/3/2
                                                 Eth1/3/3, Eth1/3/4,
Eth1/4/1
                                                 Eth1/4/2, Eth1/4/3,
Eth1/4/4
                                                 Eth1/5/1, Eth1/5/2,
Eth1/5/3
                                                 Eth1/5/4, Eth1/6/1,
Eth1/6/2
                                                 Eth1/6/3, Eth1/6/4,
Eth1/7/1
                                                 Eth1/7/2, Eth1/7/3,
Eth1/7/4
                                                 Eth1/8/1, Eth1/8/2,
Eth1/8/3
                                                 Eth1/8/4, Eth1/9/1,
Eth1/9/2
                                                 Eth1/9/3, Eth1/9/4,
Eth1/10/1
                                                 Eth1/10/2,
Eth1/10/3, Eth1/10/4
                                                 Eth1/11/1,
Eth1/11/2, Eth1/11/3
                                                 Eth1/11/4,
Eth1/12/1, Eth1/12/2
                                                 Eth1/12/3,
Eth1/12/4, Eth1/13/1
                                                 Eth1/13/2,
Eth1/13/3, Eth1/13/4
                                                 Eth1/14/1,
```

```
Eth1/14/2, Eth1/14/3
                                                    Eth1/14/4,
Eth1/15/1, Eth1/15/2
                                                    Eth1/15/3,
Eth1/15/4, Eth1/16/1
                                                    Eth1/16/2,
Eth1/16/3, Eth1/16/4
                                                    Eth1/17/1,
Eth1/17/2, Eth1/17/3
                                                    Eth1/17/4,
Eth1/18/1, Eth1/18/2
                                                    Eth1/18/3,
Eth1/18/4, Eth1/19/1
                                                    Eth1/19/2,
Eth1/19/3, Eth1/19/4
                                                    Eth1/20/1,
Eth1/20/2, Eth1/20/3
                                                    Eth1/20/4,
Eth1/21/1, Eth1/21/2
                                                    Eth1/21/3,
Eth1/21/4, Eth1/22/1
                                                    Eth1/22/2,
Eth1/22/3, Eth1/22/4
                                                    Eth1/23/1,
Eth1/23/2, Eth1/23/3
                                                    Eth1/23/4,
Eth1/24/1, Eth1/24/2
                                                    Eth1/24/3,
Eth1/24/4, Eth1/25/1
                                                    Eth1/25/2,
Eth1/25/3, Eth1/25/4
                                                    Eth1/26/1,
Eth1/26/2, Eth1/26/3
                                                    Eth1/26/4,
Eth1/27/1, Eth1/27/2
                                                    Eth1/27/3,
Eth1/27/4, Eth1/28/1
                                                    Eth1/28/2,
Eth1/28/3, Eth1/28/4
                                                    Eth1/29/1,
Eth1/29/2, Eth1/29/3
                                                    Eth1/29/4,
Eth1/30/1, Eth1/30/2
                                                    Eth1/30/3,
Eth1/30/4, Eth1/31/1
                                                    Eth1/31/2,
```

```
Eth1/31/3, Eth1/31/4
                                                    Eth1/32/1,
Eth1/32/2, Eth1/32/3
                                                    Eth1/32/4,
Eth1/33/1, Eth1/33/2
                                                    Eth1/33/3,
Eth1/33/4, Eth1/34/1
                                                    Eth1/34/2,
Eth1/34/3, Eth1/34/4
                                                    Eth1/35/1,
Eth1/35/2, Eth1/35/3
                                                    Eth1/35/4,
Eth1/36/1, Eth1/36/2
                                                    Eth1/36/3,
Eth1/36/4, Eth1/37/1
                                                    Eth1/37/2,
Eth1/37/3, Eth1/37/4
                                                    Eth1/38/1,
Eth1/38/2, Eth1/38/3
                                                    Eth1/38/4,
Eth1/39/1, Eth1/39/2
                                                    Eth1/39/3,
Eth1/39/4, Eth1/40/1
                                                    Eth1/40/2,
Eth1/40/3, Eth1/40/4
                                                    Eth1/41/1,
Eth1/41/2, Eth1/41/3
                                                    Eth1/41/4,
Eth1/42/1, Eth1/42/2
                                                    Eth1/42/3,
Eth1/42/4, Eth1/43/1
                                                    Eth1/43/2,
Eth1/43/3, Eth1/43/4
                                                    Eth1/44/1,
Eth1/44/2, Eth1/44/3
                                                    Eth1/44/4,
Eth1/45/1, Eth1/45/2
                                                    Eth1/45/3,
Eth1/45/4, Eth1/46/1
                                                    Eth1/46/2,
Eth1/46/3, Eth1/46/4
                                                    Eth1/47/1,
Eth1/47/2, Eth1/47/3
                                                    Eth1/47/4,
Eth1/48/1, Eth1/48/2
                                                    Eth1/48/3,
```

```
Eth1/48/4, Eth1/49/1
                                                    Eth1/49/2,
Eth1/49/3, Eth1/49/4
                                                    Eth1/50/1,
Eth1/50/2, Eth1/50/3
                                                    Eth1/50/4,
Eth1/51/1, Eth1/51/2
                                                    Eth1/51/3,
Eth1/51/4, Eth1/52/1
                                                    Eth1/52/2,
Eth1/52/3, Eth1/52/4
                                                    Eth1/53/1,
Eth1/53/2, Eth1/53/3
                                                    Eth1/53/4,
Eth1/54/1, Eth1/54/2
                                                    Eth1/54/3,
Eth1/54/4, Eth1/55/1
                                                    Eth1/55/2,
Eth1/55/3, Eth1/55/4
                                                    Eth1/56/1,
Eth1/56/2, Eth1/56/3
                                                    Eth1/56/4,
Eth1/57/1, Eth1/57/2
                                                    Eth1/57/3,
Eth1/57/4, Eth1/58/1
                                                    Eth1/58/2,
Eth1/58/3, Eth1/58/4
                                                    Eth1/59/1,
Eth1/59/2, Eth1/59/3
                                                    Eth1/59/4,
Eth1/60/1, Eth1/60/2
                                                    Eth1/60/3,
Eth1/60/4, Eth1/61/1
                                                    Eth1/61/2,
Eth1/61/3, Eth1/61/4
                                                    Eth1/62/1,
Eth1/62/2, Eth1/62/3
                                                    Eth1/62/4
17   VLAN0017                         active    Eth1/1/1, Eth1/1/2,
Eth1/1/3
                                                    Eth1/1/4, Eth1/2/1,
Eth1/2/2
                                                    Eth1/2/3, Eth1/2/4,
Eth1/3/1
                                                    Eth1/3/2, Eth1/3/3,
Eth1/3/4
```

```
                                                    Eth1/4/1, Eth1/4/2,
Eth1/4/3
                                                    Eth1/4/4, Eth1/5/1,
Eth1/5/2
                                                    Eth1/5/3, Eth1/5/4,
Eth1/6/1
                                                    Eth1/6/2, Eth1/6/3,
Eth1/6/4
                                                    Eth1/7/1, Eth1/7/2,
Eth1/7/3
                                                    Eth1/7/4, Eth1/8/1,
Eth1/8/2
                                                    Eth1/8/3, Eth1/8/4,
Eth1/9/1
                                                    Eth1/9/2, Eth1/9/3,
Eth1/9/4
                                                    Eth1/10/1,
Eth1/10/2, Eth1/10/3
                                                    Eth1/10/4,
Eth1/11/1, Eth1/11/2
                                                    Eth1/11/3,
Eth1/11/4, Eth1/12/1
                                                    Eth1/12/2,
Eth1/12/3, Eth1/12/4
                                                    Eth1/13/1,
Eth1/13/2, Eth1/13/3
                                                    Eth1/13/4,
Eth1/14/1, Eth1/14/2
                                                    Eth1/14/3,
Eth1/14/4, Eth1/15/1
                                                    Eth1/15/2,
Eth1/15/3, Eth1/15/4
                                                    Eth1/16/1,
Eth1/16/2, Eth1/16/3
                                                    Eth1/16/4,
Eth1/17/1, Eth1/17/2
                                                    Eth1/17/3,
Eth1/17/4, Eth1/18/1
                                                    Eth1/18/2,
Eth1/18/3, Eth1/18/4
                                                    Eth1/19/1,
Eth1/19/2, Eth1/19/3
                                                    Eth1/19/4,
Eth1/20/1, Eth1/20/2
                                                    Eth1/20/3,
Eth1/20/4, Eth1/21/1
```

```
                                                    Eth1/21/2,
Eth1/21/3, Eth1/21/4
                                                    Eth1/22/1,
Eth1/22/2, Eth1/22/3
                                                    Eth1/22/4,
Eth1/23/1, Eth1/23/2
                                                    Eth1/23/3,
Eth1/23/4, Eth1/24/1
                                                    Eth1/24/2,
Eth1/24/3, Eth1/24/4
                                                    Eth1/25/1,
Eth1/25/2, Eth1/25/3
                                                    Eth1/25/4,
Eth1/26/1, Eth1/26/2
                                                    Eth1/26/3,
Eth1/26/4, Eth1/27/1
                                                    Eth1/27/2,
Eth1/27/3, Eth1/27/4
                                                    Eth1/28/1,
Eth1/28/2, Eth1/28/3
                                                    Eth1/28/4,
Eth1/29/1, Eth1/29/2
                                                    Eth1/29/3,
Eth1/29/4, Eth1/30/1
                                                    Eth1/30/2,
Eth1/30/3, Eth1/30/4
                                                    Eth1/31/1,
Eth1/31/2, Eth1/31/3
                                                    Eth1/31/4,
Eth1/32/1, Eth1/32/2
                                                    Eth1/32/3,
Eth1/32/4, Eth1/33/1
                                                    Eth1/33/2,
Eth1/33/3, Eth1/33/4
                                                    Eth1/34/1,
Eth1/34/2, Eth1/34/3
                                                    Eth1/34/4,
Eth1/35/1, Eth1/35/2
                                                    Eth1/35/3,
Eth1/35/4, Eth1/36/1
                                                    Eth1/36/2,
Eth1/36/3, Eth1/36/4
                                                    Eth1/37/1,
Eth1/37/2, Eth1/37/3
                                                    Eth1/37/4,
Eth1/38/1, Eth1/38/2
```

```
                                                    Eth1/38/3,
Eth1/38/4, Eth1/39/1
                                                    Eth1/39/2,
Eth1/39/3, Eth1/39/4
                                                    Eth1/40/1,
Eth1/40/2, Eth1/40/3
                                                    Eth1/40/4,
Eth1/41/1, Eth1/41/2
                                                    Eth1/41/3,
Eth1/41/4, Eth1/42/1
                                                    Eth1/42/2,
Eth1/42/3, Eth1/42/4
                                                    Eth1/43/1,
Eth1/43/2, Eth1/43/3
                                                    Eth1/43/4,
Eth1/44/1, Eth1/44/2
                                                    Eth1/44/3,
Eth1/44/4, Eth1/45/1
                                                    Eth1/45/2,
Eth1/45/3, Eth1/45/4
                                                    Eth1/46/1,
Eth1/46/2, Eth1/46/3
                                                    Eth1/46/4,
Eth1/47/1, Eth1/47/2
                                                    Eth1/47/3,
Eth1/47/4, Eth1/48/1
                                                    Eth1/48/2,
Eth1/48/3, Eth1/48/4
                                                    Eth1/49/1,
Eth1/49/2, Eth1/49/3
                                                    Eth1/49/4,
Eth1/50/1, Eth1/50/2
                                                    Eth1/50/3,
Eth1/50/4, Eth1/51/1
                                                    Eth1/51/2,
Eth1/51/3, Eth1/51/4
                                                    Eth1/52/1,
Eth1/52/2, Eth1/52/3
                                                    Eth1/52/4,
Eth1/53/1, Eth1/53/2
                                                    Eth1/53/3,
Eth1/53/4, Eth1/54/1
                                                    Eth1/54/2,
Eth1/54/3, Eth1/54/4
                                                    Eth1/55/1,
Eth1/55/2, Eth1/55/3
```

```
                                                  Eth1/55/4,
Eth1/56/1, Eth1/56/2
                                                  Eth1/56/3,
Eth1/56/4, Eth1/57/1
                                                  Eth1/57/2,
Eth1/57/3, Eth1/57/4
                                                  Eth1/58/1,
Eth1/58/2, Eth1/58/3
                                                  Eth1/58/4,
Eth1/59/1, Eth1/59/2
                                                  Eth1/59/3,
Eth1/59/4, Eth1/60/1
                                                  Eth1/60/2,
Eth1/60/3, Eth1/60/4
                                                  Eth1/61/1,
Eth1/61/2, Eth1/61/3
                                                  Eth1/61/4,
Eth1/62/1, Eth1/62/2
                                                  Eth1/62/3, Eth1/62/4
18   VLAN0018                         active    Eth1/1/1, Eth1/1/2,
Eth1/1/3
                                                  Eth1/1/4, Eth1/2/1,
Eth1/2/2
                                                  Eth1/2/3, Eth1/2/4,
Eth1/3/1
                                                  Eth1/3/2, Eth1/3/3,
Eth1/3/4
                                                  Eth1/4/1, Eth1/4/2,
Eth1/4/3
                                                  Eth1/4/4, Eth1/5/1,
Eth1/5/2
                                                  Eth1/5/3, Eth1/5/4,
Eth1/6/1
                                                  Eth1/6/2, Eth1/6/3,
Eth1/6/4
                                                  Eth1/7/1, Eth1/7/2,
Eth1/7/3
                                                  Eth1/7/4, Eth1/8/1,
Eth1/8/2
                                                  Eth1/8/3, Eth1/8/4,
Eth1/9/1
                                                  Eth1/9/2, Eth1/9/3,
Eth1/9/4
                                                  Eth1/10/1,
Eth1/10/2, Eth1/10/3
                                                  Eth1/10/4,
```

```
Eth1/11/1, Eth1/11/2
                                                    Eth1/11/3,
Eth1/11/4, Eth1/12/1
                                                    Eth1/12/2,
Eth1/12/3, Eth1/12/4
                                                    Eth1/13/1,
Eth1/13/2, Eth1/13/3
                                                    Eth1/13/4,
Eth1/14/1, Eth1/14/2
                                                    Eth1/14/3,
Eth1/14/4, Eth1/15/1
                                                    Eth1/15/2,
Eth1/15/3, Eth1/15/4
                                                    Eth1/16/1,
Eth1/16/2, Eth1/16/3
                                                    Eth1/16/4,
Eth1/17/1, Eth1/17/2
                                                    Eth1/17/3,
Eth1/17/4, Eth1/18/1
                                                    Eth1/18/2,
Eth1/18/3, Eth1/18/4
                                                    Eth1/19/1,
Eth1/19/2, Eth1/19/3
                                                    Eth1/19/4,
Eth1/20/1, Eth1/20/2
                                                    Eth1/20/3,
Eth1/20/4, Eth1/21/1
                                                    Eth1/21/2,
Eth1/21/3, Eth1/21/4
                                                    Eth1/22/1,
Eth1/22/2, Eth1/22/3
                                                    Eth1/22/4,
Eth1/23/1, Eth1/23/2
                                                    Eth1/23/3,
Eth1/23/4, Eth1/24/1
                                                    Eth1/24/2,
Eth1/24/3, Eth1/24/4
                                                    Eth1/25/1,
Eth1/25/2, Eth1/25/3
                                                    Eth1/25/4,
Eth1/26/1, Eth1/26/2
                                                    Eth1/26/3,
Eth1/26/4, Eth1/27/1
                                                    Eth1/27/2,
Eth1/27/3, Eth1/27/4
                                                    Eth1/28/1,
```

```
Eth1/28/2, Eth1/28/3
                                                    Eth1/28/4,
Eth1/29/1, Eth1/29/2
                                                    Eth1/29/3,
Eth1/29/4, Eth1/30/1
                                                    Eth1/30/2,
Eth1/30/3, Eth1/30/4
                                                    Eth1/31/1,
Eth1/31/2, Eth1/31/3
                                                    Eth1/31/4,
Eth1/32/1, Eth1/32/2
                                                    Eth1/32/3,
Eth1/32/4, Eth1/33/1
                                                    Eth1/33/2,
Eth1/33/3, Eth1/33/4
                                                    Eth1/34/1,
Eth1/34/2, Eth1/34/3
                                                    Eth1/34/4,
Eth1/35/1, Eth1/35/2
                                                    Eth1/35/3,
Eth1/35/4, Eth1/36/1
                                                    Eth1/36/2,
Eth1/36/3, Eth1/36/4
                                                    Eth1/37/1,
Eth1/37/2, Eth1/37/3
                                                    Eth1/37/4,
Eth1/38/1, Eth1/38/2
                                                    Eth1/38/3,
Eth1/38/4, Eth1/39/1
                                                    Eth1/39/2,
Eth1/39/3, Eth1/39/4
                                                    Eth1/40/1,
Eth1/40/2, Eth1/40/3
                                                    Eth1/40/4,
Eth1/41/1, Eth1/41/2
                                                    Eth1/41/3,
Eth1/41/4, Eth1/42/1
                                                    Eth1/42/2,
Eth1/42/3, Eth1/42/4
                                                    Eth1/43/1,
Eth1/43/2, Eth1/43/3
                                                    Eth1/43/4,
Eth1/44/1, Eth1/44/2
                                                    Eth1/44/3,
Eth1/44/4, Eth1/45/1
                                                    Eth1/45/2,
```

```
Eth1/45/3, Eth1/45/4
                                                    Eth1/46/1,
Eth1/46/2, Eth1/46/3
                                                    Eth1/46/4,
Eth1/47/1, Eth1/47/2
                                                    Eth1/47/3,
Eth1/47/4, Eth1/48/1
                                                    Eth1/48/2,
Eth1/48/3, Eth1/48/4
                                                    Eth1/49/1,
Eth1/49/2, Eth1/49/3
                                                    Eth1/49/4,
Eth1/50/1, Eth1/50/2
                                                    Eth1/50/3,
Eth1/50/4, Eth1/51/1
                                                    Eth1/51/2,
Eth1/51/3, Eth1/51/4
                                                    Eth1/52/1,
Eth1/52/2, Eth1/52/3
                                                    Eth1/52/4,
Eth1/53/1, Eth1/53/2
                                                    Eth1/53/3,
Eth1/53/4, Eth1/54/1
                                                    Eth1/54/2,
Eth1/54/3, Eth1/54/4
                                                    Eth1/55/1,
Eth1/55/2, Eth1/55/3
                                                    Eth1/55/4,
Eth1/56/1, Eth1/56/2
                                                    Eth1/56/3,
Eth1/56/4, Eth1/57/1
                                                    Eth1/57/2,
Eth1/57/3, Eth1/57/4
                                                    Eth1/58/1,
Eth1/58/2, Eth1/58/3
                                                    Eth1/58/4,
Eth1/59/1, Eth1/59/2
                                                    Eth1/59/3,
Eth1/59/4, Eth1/60/1
                                                    Eth1/60/2,
Eth1/60/3, Eth1/60/4
                                                    Eth1/61/1,
Eth1/61/2, Eth1/61/3
                                                    Eth1/61/4,
Eth1/62/1, Eth1/62/2
                                                    Eth1/62/3, Eth1/62/4
```

```
30   VLAN0030                         active    Eth1/1/1, Eth1/1/2,
Eth1/1/3
                                                Eth1/1/4, Eth1/2/1,
Eth1/2/2
                                                Eth1/2/3, Eth1/2/4,
Eth1/3/1
                                                Eth1/3/2, Eth1/3/3,
Eth1/3/4
                                                Eth1/4/1, Eth1/4/2,
Eth1/4/3
                                                Eth1/4/4, Eth1/5/1,
Eth1/5/2
                                                Eth1/5/3, Eth1/5/4,
Eth1/6/1
                                                Eth1/6/2, Eth1/6/3,
Eth1/6/4
                                                Eth1/7/1, Eth1/7/2,
Eth1/7/3
                                                Eth1/7/4, Eth1/8/1,
Eth1/8/2
                                                Eth1/8/3, Eth1/8/4,
Eth1/9/1
                                                Eth1/9/2, Eth1/9/3,
Eth1/9/4
                                                Eth1/10/1,
Eth1/10/2, Eth1/10/3
                                                Eth1/10/4,
Eth1/11/1, Eth1/11/2
                                                Eth1/11/3,
Eth1/11/4, Eth1/12/1
                                                Eth1/12/2,
Eth1/12/3, Eth1/12/4
                                                Eth1/13/1,
Eth1/13/2, Eth1/13/3
                                                Eth1/13/4,
Eth1/14/1, Eth1/14/2
                                                Eth1/14/3,
Eth1/14/4, Eth1/15/1
                                                Eth1/15/2,
Eth1/15/3, Eth1/15/4
                                                Eth1/16/1,
Eth1/16/2, Eth1/16/3
                                                Eth1/16/4,
Eth1/17/1, Eth1/17/2
                                                Eth1/17/3,
Eth1/17/4, Eth1/18/1
```

```
                                                    Eth1/18/2,
Eth1/18/3, Eth1/18/4
                                                    Eth1/19/1,
Eth1/19/2, Eth1/19/3
                                                    Eth1/19/4,
Eth1/20/1, Eth1/20/2
                                                    Eth1/20/3,
Eth1/20/4, Eth1/21/1
                                                    Eth1/21/2,
Eth1/21/3, Eth1/21/4
                                                    Eth1/22/1,
Eth1/22/2, Eth1/22/3
                                                    Eth1/22/4,
Eth1/23/1, Eth1/23/2
                                                    Eth1/23/3,
Eth1/23/4, Eth1/24/1
                                                    Eth1/24/2,
Eth1/24/3, Eth1/24/4
                                                    Eth1/25/1,
Eth1/25/2, Eth1/25/3
                                                    Eth1/25/4,
Eth1/26/1, Eth1/26/2
                                                    Eth1/26/3,
Eth1/26/4, Eth1/27/1
                                                    Eth1/27/2,
Eth1/27/3, Eth1/27/4
                                                    Eth1/28/1,
Eth1/28/2, Eth1/28/3
                                                    Eth1/28/4,
Eth1/29/1, Eth1/29/2
                                                    Eth1/29/3,
Eth1/29/4, Eth1/30/1
                                                    Eth1/30/2,
Eth1/30/3, Eth1/30/4
                                                    Eth1/31/1,
Eth1/31/2, Eth1/31/3
                                                    Eth1/31/4,
Eth1/32/1, Eth1/32/2
                                                    Eth1/32/3,
Eth1/32/4, Eth1/33/1
                                                    Eth1/33/2,
Eth1/33/3, Eth1/33/4
                                                    Eth1/34/1,
Eth1/34/2, Eth1/34/3
                                                    Eth1/34/4,
Eth1/35/1, Eth1/35/2
```

```
                                                    Eth1/35/3,
Eth1/35/4, Eth1/36/1
                                                    Eth1/36/2,
Eth1/36/3, Eth1/36/4
                                                    Eth1/37/1,
Eth1/37/2, Eth1/37/3
                                                    Eth1/37/4,
Eth1/38/1, Eth1/38/2
                                                    Eth1/38/3,
Eth1/38/4, Eth1/39/1
                                                    Eth1/39/2,
Eth1/39/3, Eth1/39/4
                                                    Eth1/40/1,
Eth1/40/2, Eth1/40/3
                                                    Eth1/40/4,
Eth1/41/1, Eth1/41/2
                                                    Eth1/41/3,
Eth1/41/4, Eth1/42/1
                                                    Eth1/42/2,
Eth1/42/3, Eth1/42/4
                                                    Eth1/43/1,
Eth1/43/2, Eth1/43/3
                                                    Eth1/43/4,
Eth1/44/1, Eth1/44/2
                                                    Eth1/44/3,
Eth1/44/4, Eth1/45/1
                                                    Eth1/45/2,
Eth1/45/3, Eth1/45/4
                                                    Eth1/46/1,
Eth1/46/2, Eth1/46/3
                                                    Eth1/46/4,
Eth1/47/1, Eth1/47/2
                                                    Eth1/47/3,
Eth1/47/4, Eth1/48/1
                                                    Eth1/48/2,
Eth1/48/3, Eth1/48/4
                                                    Eth1/49/1,
Eth1/49/2, Eth1/49/3
                                                    Eth1/49/4,
Eth1/50/1, Eth1/50/2
                                                    Eth1/50/3,
Eth1/50/4, Eth1/51/1
                                                    Eth1/51/2,
Eth1/51/3, Eth1/51/4
                                                    Eth1/52/1,
Eth1/52/2, Eth1/52/3
```

```
                                                  Eth1/52/4,
Eth1/53/1, Eth1/53/2
                                                  Eth1/53/3,
Eth1/53/4, Eth1/54/1
                                                  Eth1/54/2,
Eth1/54/3, Eth1/54/4
                                                  Eth1/55/1,
Eth1/55/2, Eth1/55/3
                                                  Eth1/55/4,
Eth1/56/1, Eth1/56/2
                                                  Eth1/56/3,
Eth1/56/4, Eth1/57/1
                                                  Eth1/57/2,
Eth1/57/3, Eth1/57/4
                                                  Eth1/58/1,
Eth1/58/2, Eth1/58/3
                                                  Eth1/58/4,
Eth1/59/1, Eth1/59/2
                                                  Eth1/59/3,
Eth1/59/4, Eth1/60/1
                                                  Eth1/60/2,
Eth1/60/3, Eth1/60/4
                                                  Eth1/61/1,
Eth1/61/2, Eth1/61/3
                                                  Eth1/61/4,
Eth1/62/1, Eth1/62/2
                                                  Eth1/62/3, Eth1/62/4
40   VLAN0040                         active    Eth1/1/1, Eth1/1/2,
Eth1/1/3
                                                  Eth1/1/4, Eth1/2/1,
Eth1/2/2
                                                  Eth1/2/3, Eth1/2/4,
Eth1/3/1
                                                  Eth1/3/2, Eth1/3/3,
Eth1/3/4
                                                  Eth1/4/1, Eth1/4/2,
Eth1/4/3
                                                  Eth1/4/4, Eth1/5/1,
Eth1/5/2
                                                  Eth1/5/3, Eth1/5/4,
Eth1/6/1
                                                  Eth1/6/2, Eth1/6/3,
Eth1/6/4
                                                  Eth1/7/1, Eth1/7/2,
Eth1/7/3
                                                  Eth1/7/4, Eth1/8/1,
```

```
Eth1/8/2
                                                    Eth1/8/3, Eth1/8/4,
Eth1/9/1
                                                    Eth1/9/2, Eth1/9/3,
Eth1/9/4
                                                    Eth1/10/1,
Eth1/10/2, Eth1/10/3
                                                    Eth1/10/4,
Eth1/11/1, Eth1/11/2
                                                    Eth1/11/3,
Eth1/11/4, Eth1/12/1
                                                    Eth1/12/2,
Eth1/12/3, Eth1/12/4
                                                    Eth1/13/1,
Eth1/13/2, Eth1/13/3
                                                    Eth1/13/4,
Eth1/14/1, Eth1/14/2
                                                    Eth1/14/3,
Eth1/14/4, Eth1/15/1
                                                    Eth1/15/2,
Eth1/15/3, Eth1/15/4
                                                    Eth1/16/1,
Eth1/16/2, Eth1/16/3
                                                    Eth1/16/4,
Eth1/17/1, Eth1/17/2
                                                    Eth1/17/3,
Eth1/17/4, Eth1/18/1
                                                    Eth1/18/2,
Eth1/18/3, Eth1/18/4
                                                    Eth1/19/1,
Eth1/19/2, Eth1/19/3
                                                    Eth1/19/4,
Eth1/20/1, Eth1/20/2
                                                    Eth1/20/3,
Eth1/20/4, Eth1/21/1
                                                    Eth1/21/2,
Eth1/21/3, Eth1/21/4
                                                    Eth1/22/1,
Eth1/22/2, Eth1/22/3
                                                    Eth1/22/4,
Eth1/23/1, Eth1/23/2
                                                    Eth1/23/3,
Eth1/23/4, Eth1/24/1
                                                    Eth1/24/2,
Eth1/24/3, Eth1/24/4
                                                    Eth1/25/1,
```

```
Eth1/25/2, Eth1/25/3
                                                    Eth1/25/4,
Eth1/26/1, Eth1/26/2
                                                    Eth1/26/3,
Eth1/26/4, Eth1/27/1
                                                    Eth1/27/2,
Eth1/27/3, Eth1/27/4
                                                    Eth1/28/1,
Eth1/28/2, Eth1/28/3
                                                    Eth1/28/4,
Eth1/29/1, Eth1/29/2
                                                    Eth1/29/3,
Eth1/29/4, Eth1/30/1
                                                    Eth1/30/2,
Eth1/30/3, Eth1/30/4
                                                    Eth1/31/1,
Eth1/31/2, Eth1/31/3
                                                    Eth1/31/4,
Eth1/32/1, Eth1/32/2
                                                    Eth1/32/3,
Eth1/32/4, Eth1/33/1
                                                    Eth1/33/2,
Eth1/33/3, Eth1/33/4
                                                    Eth1/34/1,
Eth1/34/2, Eth1/34/3
                                                    Eth1/34/4,
Eth1/35/1, Eth1/35/2
                                                    Eth1/35/3,
Eth1/35/4, Eth1/36/1
                                                    Eth1/36/2,
Eth1/36/3, Eth1/36/4
                                                    Eth1/37/1,
Eth1/37/2, Eth1/37/3
                                                    Eth1/37/4,
Eth1/38/1, Eth1/38/2
                                                    Eth1/38/3,
Eth1/38/4, Eth1/39/1
                                                    Eth1/39/2,
Eth1/39/3, Eth1/39/4
                                                    Eth1/40/1,
Eth1/40/2, Eth1/40/3
                                                    Eth1/40/4,
Eth1/41/1, Eth1/41/2
                                                    Eth1/41/3,
Eth1/41/4, Eth1/42/1
                                                    Eth1/42/2,
```

```
Eth1/42/3, Eth1/42/4
                                                    Eth1/43/1,
Eth1/43/2, Eth1/43/3
                                                    Eth1/43/4,
Eth1/44/1, Eth1/44/2
                                                    Eth1/44/3,
Eth1/44/4, Eth1/45/1
                                                    Eth1/45/2,
Eth1/45/3, Eth1/45/4
                                                    Eth1/46/1,
Eth1/46/2, Eth1/46/3
                                                    Eth1/46/4,
Eth1/47/1, Eth1/47/2
                                                    Eth1/47/3,
Eth1/47/4, Eth1/48/1
                                                    Eth1/48/2,
Eth1/48/3, Eth1/48/4
                                                    Eth1/49/1,
Eth1/49/2, Eth1/49/3
                                                    Eth1/49/4,
Eth1/50/1, Eth1/50/2
                                                    Eth1/50/3,
Eth1/50/4, Eth1/51/1
                                                    Eth1/51/2,
Eth1/51/3, Eth1/51/4
                                                    Eth1/52/1,
Eth1/52/2, Eth1/52/3
                                                    Eth1/52/4,
Eth1/53/1, Eth1/53/2
                                                    Eth1/53/3,
Eth1/53/4, Eth1/54/1
                                                    Eth1/54/2,
Eth1/54/3, Eth1/54/4
                                                    Eth1/55/1,
Eth1/55/2, Eth1/55/3
                                                    Eth1/55/4,
Eth1/56/1, Eth1/56/2
                                                    Eth1/56/3,
Eth1/56/4, Eth1/57/1
                                                    Eth1/57/2,
Eth1/57/3, Eth1/57/4
                                                    Eth1/58/1,
Eth1/58/2, Eth1/58/3
                                                    Eth1/58/4,
Eth1/59/1, Eth1/59/2
                                                    Eth1/59/3,
```

```
Eth1/59/4, Eth1/60/1
                                                    Eth1/60/2,
Eth1/60/3, Eth1/60/4
                                                    Eth1/61/1,
Eth1/61/2, Eth1/61/3
                                                    Eth1/61/4,
Eth1/62/1, Eth1/62/2
                                                    Eth1/62/3, Eth1/62/4

cs1# show interface trunk

--------------------------------------------------------
Port          Native  Status        Port
              Vlan                  Channel
--------------------------------------------------------
Eth1/1/1      1       trunking      --
Eth1/1/2      1       trunking      --
Eth1/1/3      1       trunking      --
Eth1/1/4      1       trunking      --
Eth1/2/1      1       trunking      --
Eth1/2/2      1       trunking      --
Eth1/2/3      1       trunking      --
Eth1/2/4      1       trunking      --
.
.
.
Eth1/62/2     none
Eth1/62/3     none
Eth1/62/4     none
Eth1/63       none
Eth1/64       none
Po1           1
```

For specific port and VLAN usage details, refer to the banner and important notes section in your RCF.

4. Verify that the ISL between cs1 and cs2 is functional:

```
show port-channel summary
```

Show example

```
cs1# show port-channel summary
Flags:  D - Down        P - Up in port-channel (members)
        I - Individual  H - Hot-standby (LACP only)
        s - Suspended   r - Module-removed
        b - BFD Session Wait
        S - Switched    R - Routed
        U - Up (port-channel)
        p - Up in delay-lacp mode (member)
        M - Not in use. Min-links not met
--------------------------------------------------------------------------
------------
Group Port-       Type     Protocol  Member Ports      Channel
--------------------------------------------------------------------------
------------
1     Po1(SU)     Eth      LACP      Eth1/63(P)   Eth1/64(P)
999   Po999(SD)   Eth      NONE      --
cs1#
```

5. Verify that the cluster LIFs have reverted to their home port:

```
network interface show -role cluster
```

Show example

```
cluster1::*> network interface show -role cluster
            Logical            Status     Network            Current
Current Is
Vserver     Interface          Admin/Oper Address/Mask       Node
Port    Home
----------- ------------------ ---------- ------------------
------------ ------- ----
Cluster
            node1-01_clus1     up/up      169.254.36.44/16   node1-
01     e7a     true
            node1-01_clus2     up/up      169.254.7.5/16     node1-
01     e7b     true
            node1-02_clus1     up/up      169.254.197.206/16 node1-
02     e7a     true
            node1-02_clus2     up/up      169.254.195.186/16 node1-
02     e7b     true
            node1-03_clus1     up/up      169.254.192.49/16  node1-
03     e7a     true
            node1-03_clus2     up/up      169.254.182.76/16  node1-
03     e7b     true
            node1-04_clus1     up/up      169.254.59.49/16   node1-
04     e7a     true
            node1-04_clus2     up/up      169.254.62.244/16  node1-
04     e7b     true

8 entries were displayed.
```

If any cluster LIFs have not returned to their home ports, revert them manually from the local node:

`network interface revert -vserver vserver_name -lif <lif-name>`

6. Verify that the cluster is healthy:

`cluster show`

Show example

```
cluster1::*> cluster show
Node                Health  Eligibility   Epsilon
------------------- ------- ------------- -------
node1-01            true    true          false
node1-02            true    true          false
node1-03            true    true          true
node1-04            true    true          false
```

7. Verify the connectivity of the remote cluster interfaces:

   a. You can use the `network interface check cluster-connectivity show` command to display the details of an accessibility check for cluster connectivity:

   ```
   network interface check cluster-connectivity show
   ```

   Show example

   ```
   cluster1::*> network interface check cluster-connectivity show

                                     Source           Destination
   Packet
   Node   Date                       LIF              LIF
   Loss
   ------ -------------------------- ----------------
   -------------- -----------
   node1-01
          6/4/2025 03:13:33 -04:00   node1-01_clus2  node1-02_clus1
   none
          6/4/2025 03:13:34 -04:00   node1-01_clus2  node1-02_clus1
   none


   node1-02
          6/4/2025 03:13:33 -04:00   node1-02_clus2  node1-01_clus1
   none
          6/4/2025 03:13:34 -04:00   node1-02_clus2  node1-01_clus2
   none
   .
   .
   .
   ```

b. Alternatively, you can use the `cluster ping-cluster -node <node-name>` command to check the connectivity:

```
cluster ping-cluster -node <node-name>
```

Show example

```
cluster1::*> cluster ping-cluster -node local
Host is node1-04
Getting addresses from network interface table...
Cluster node1-01_clus1 169.254.36.44 node1-01 e7a
Cluster node1-01_clus2 169.254.7.5   node1-01 e7b
Cluster node1-02_clus1 169.254.197.206 node1-02 e7a
Cluster node1-02_clus2 169.254.195.186 node1-02 e7b
Cluster node1-03_clus1 169.254.192.49 node1-03 e7a
Cluster node1-03_clus2 169.254.182.76 node1-03 e7b
Cluster node1-04_clus1 169.254.59.49 node1-04 e7a
Cluster node1-04_clus2 169.254.62.244 node1-04 e7b
Local = 169.254.59.49 169.254.62.244
Remote = 169.254.36.44 169.254.7.5 169.254.197.206
169.254.195.186 169.254.192.49 169.254.182.76
Cluster Vserver Id = 4294967293
Ping status:
............
Basic connectivity succeeds on 12 path(s)
Basic connectivity fails on 0 path(s)
................................................
Detected 9000 byte MTU on 12 path(s):
    Local 169.254.59.49 to Remote 169.254.182.76
    Local 169.254.59.49 to Remote 169.254.192.49
    Local 169.254.59.49 to Remote 169.254.195.186
    Local 169.254.59.49 to Remote 169.254.197.206
    Local 169.254.59.49 to Remote 169.254.36.44
    Local 169.254.59.49 to Remote 169.254.7.5
    Local 169.254.62.244 to Remote 169.254.182.76
    Local 169.254.62.244 to Remote 169.254.192.49
    Local 169.254.62.244 to Remote 169.254.195.186
    Local 169.254.62.244 to Remote 169.254.197.206
    Local 169.254.62.244 to Remote 169.254.36.44
    Local 169.254.62.244 to Remote 169.254.7.5
Larger than PMTU communication succeeds on 12 path(s)
RPC status:
6 paths up, 0 paths down (tcp check)
6 paths up, 0 paths down (udp check)
```

What's next?

After you've upgraded your RCF, you verify the SSH configuration.

Verify your SSH configuration

If you are using the Ethernet Switch Health Monitor (CSHM) and log collection features, verify that SSH and SSH keys are enabled on the switches.

Steps

1. Verify that SSH is enabled:

```
(switch) show ssh server
ssh version 2 is enabled
```

2. Verify that the SSH keys are enabled:

```
show ssh key
```

Show example

```
(switch)# show ssh key

rsa Keys generated:Thu May 15 15:09:55 2025

ssh-rsa
AAAAB3NzaC1yc2EAAAADAQABAAAAgQDCQJPZk7OGhg0j1t0NWKylnI8R8zDpuMpU6KKA
jPOCShTFpibeYQqxOPTCAKACkut8dduZmc3bY9DIOle0cKYQ8PgS2mG9ovQ0RJ56RUNh
VNPdJuhXM4ckHoiVJxIAbHkbcw8rzawbkT6cNBUiZY3MrOMh0e0CnMRhh9we
MOo/vQ==


bitcount:1024
fingerprint:
SHA256:TMUXFgyRC3EcIZEVbQ/P0elDByBCJizPJ1XKMkIXfPI

could not retrieve dsa key information

ecdsa Keys generated:Thu May 15 15:12:09 2025


ecdsa-sha2-nistp521
AAAAE2VjZHNhLXNoYTItbmlzdHA1MjEAAAAIbmlzdHA1MjEAAACFBADquZcNSDA/eLAa
ItXyxVZxsSJSE3u4et9B6+RLq162zTe/3A6JTCyBrkfrMhQt9QMQ7XrMqJGxLSinXhyU
ClBxwQD/ZbkZueZHiFuYg5hKN97wUYvts+EwpG2mSVonxKKp
atmtgu48BqKfZTc4LZYL5vgdh5uuktJ0Z8mYHt3xKPXsvw==


bitcount:521
fingerprint:
SHA256:K8LDx6L7sJjLFn8iubUhjt66uk8TYmXwnQKWVD04C1o
**

(switch)# show feature | include scpServer
scpServer             1          enabled
(switch)# show feature | include ssh
sshServer             1          enabled
(switch)#
```

What's next?

After you've verified your SSH configuration, you configure switch health monitoring.

Reset the 9364D-GX2A switch to factory defaults

To reset the 9364D-GX2A switch to factory defaults, you must erase the 9364D-GX2A switch settings.

About this task

- You must be connected to the switch using the serial console.
- This task resets the configuration of the management network.

Steps

1. Erase the existing configuration:

   `write erase`

   ```
   (cs2)# write erase

   Warning: This command will erase the startup-configuration.
   Do you wish to proceed anyway? (y/n) [n] y
   ```

2. Reload the switch software:

   `reload`

   ```
   (cs2)# reload

   This command will reboot the system. (y/n)? [n] y
   ```

   The system reboots and enters the configuration wizard. During the boot, if you receive the prompt “Abort Auto Provisioning and continue with normal setup? (yes/no)[n]”, you should respond **yes** to proceed.

Replace a Cisco Nexus 9364D-GX2A switch

Follow these steps to replace a defective Nexus 9364D-GX2A switch in a cluster network. This is a nondisruptive procedure (NDU).

Review requirements

Before performing the switch replacement, make sure that:

- You have verified the switch serial number to ensure that the correct switch is replaced.
- On the existing cluster and network infrastructure:
  - The existing cluster is verified as completely functional, with at least one fully connected cluster switch.
  - All cluster ports are up.
  - All cluster logical interfaces (LIFs) are up and on their home ports.
  - The ONTAP `cluster ping-cluster -node <node-name>` command must indicate that basic

connectivity and larger than PMTU communication are successful on all paths.

- On the Nexus 9364D-GX2A replacement switch:
  - Management network connectivity on the replacement switch is functional.
  - Console access to the replacement switch is in place.
  - The node connections are ports 1/1 through 1/62.
  - All Inter-Switch Link (ISL) ports is disabled on ports 1/63 and 1/64.
  - The desired reference configuration file (RCF) and NX-OS operating system image switch is loaded onto the switch.
  - Initial customization of the switch is complete, as detailed in Configure the 9364D-GX2A cluster switch.

    Any previous site customizations, such as STP, SNMP, and SSH, are copied to the new switch.
- You have executed the command for migrating a cluster LIF from the node where the cluster LIF is hosted.

Enable console logging

NetApp strongly recommends that you enable console logging on the devices that you are using and take the following actions when replacing your switch:

- Leave AutoSupport enabled during maintenance.
- Trigger a maintenance AutoSupport before and after maintenance to disable case creation for the duration of the maintenance. See this Knowledge Base article SU92: How to suppress automatic case creation during scheduled maintenance windows for further details.
- Enable session logging for any CLI sessions. For instructions on how to enable session logging, review the "Logging Session Output" section in this Knowledge Base article How to configure PuTTY for optimal connectivity to ONTAP systems.

Replace the switch

About the examples

The examples in this procedure use the following switch and node nomenclature:

- The names of the existing Nexus 9364D-GX2A switches are cs1 and cs2.
- The name of the new Nexus 9364D-GX2A switch is newcs2.
- The node names are node1-01, node1-02, node1-03, and node1-04.
- The cluster LIF names are node1-01_clus1 and node1-01_clus2 for node1-01, node1-02_clus1 and node1-02_clus2 for node1-02, node1-03_clus1 and node1-03_clus2 for node1-03, and node1-04_clus1 and node1-04_clus2 for node1-04.
- The prompt for changes to all cluster nodes is cluster1::*>

About this task

The following procedure is based on the following cluster network topology:

Show example

```
cluster1::*> network port show -ipspace Cluster

Node: node1-01

Ignore
                                                  Speed(Mbps) Health
Health
Port      IPspace      Broadcast Domain Link MTU  Admin/Oper  Status
Status
--------- ------------ ---------------- ---- ---- ----------- --------
------
e7a       Cluster      Cluster          up   9000  auto/10000 healthy
false
e7b       Cluster      Cluster          up   9000  auto/10000 healthy
false

Node: node1-02

Ignore
                                                  Speed(Mbps) Health
Health
Port      IPspace      Broadcast Domain Link MTU  Admin/Oper  Status
Status
--------- ------------ ---------------- ---- ---- ----------- --------
------
e7a       Cluster      Cluster          up   9000  auto/10000 healthy
false
e7b       Cluster      Cluster          up   9000  auto/10000 healthy
false

Node: node1-03

Ignore
                                                  Speed(Mbps) Health
Health
Port      IPspace      Broadcast Domain Link MTU  Admin/Oper  Status
Status
--------- ------------ ---------------- ---- ---- ----------- --------
------
e7a       Cluster      Cluster          up   9000  auto/10000 healthy
false
e7b       Cluster      Cluster          up   9000  auto/10000 healthy
false
```

```
Node: node1-04

Ignore
                                                  Speed(Mbps) Health
Health
Port      IPspace      Broadcast Domain Link MTU  Admin/Oper  Status
Status
--------- ------------ ---------------- ---- ---- ----------- --------
------
e7a       Cluster      Cluster          up   9000  auto/10000 healthy
false
e7b       Cluster      Cluster          up   9000  auto/10000 healthy
false


cluster1::*> network interface show -vserver Cluster
            Logical         Status     Network            Current
Current Is
Vserver     Interface       Admin/Oper Address/Mask       Node
Port    Home
----------- --------------- ---------- ------------------ -------------
------- ----
Cluster
            node1-01_clus1  up/up      169.254.209.69/16  node1-01
e7a     true
            node1-01_clus2  up/up      169.254.49.125/16  node1-01
e7b     true
            node1-02_clus1  up/up      169.254.47.194/16  node1-02
e7a     true
            node1-02_clus2  up/up      169.254.19.183/16  node1-02
e7b     true
.
.
.

cluster1::*> network device-discovery show -protocol cdp
Node/       Local  Discovered
Protocol    Port   Device (LLDP: ChassisID)  Interface         Platform
----------- ------ ------------------------- ----------------
----------------
node1-01/cdp
            e10a   cs1(FLMXXXXXXXX)          Ethernet1/16/3    N9K-
C9364D-GX2A
            e10b   cs2(FDOXXXXXXXX)          Ethernet1/16/3    N9K-
C9364D-GX2A
            e11a   cs1(FLMXXXXXXXX)          Ethernet1/16/4    N9K-
```

```
C9364D-GX2A
            e11b   cs2(FDOXXXXXXXX)          Ethernet1/16/4    N9K-
C9364D-GX2A
            e1a    cs1(FLMXXXXXXXX)          Ethernet1/16/1    N9K-
C9364D-GX2A
            e1b    cs2(FDOXXXXXXXX)          Ethernet1/16/1    N9K-
C9364D-GX2A
            .
            .
            .
            e7a    cs1(FLMXXXXXXXX)          Ethernet1/16/2    N9K-
C9364D-GX2A
            e7b    cs2(FDOXXXXXXXX)          Ethernet1/16/2    N9K-
C9364D-GX2A
.
.
.

cs1# show cdp neighbors

Capability Codes: R - Router, T - Trans-Bridge, B - Source-Route-Bridge
                  S - Switch, H - Host, I - IGMP, r - Repeater,
                  V - VoIP-Phone, D - Remotely-Managed-Device,
                  s - Supports-STP-Dispute

Device-ID          Local Intrfce  Hldtme Capability  Platform      Port
ID
Device-ID             Local Intrfce  Hldtme Capability  Platform
Port ID
newcs2(FDOXXXXXXXX)   Eth1/63        179    R S I s     N9K-C9332D-GX2B
Eth1/31
newcs2(FDOXXXXXXXX)   Eth1/64        179    R S I s     N9K-C9332D-GX2B
Eth1/32
node1-01              Eth1/4/1       123    H           AFX-1K
e1a
node1-01              Eth1/4/2       123    H           AFX-1K
e7a
node1-01              Eth1/4/3       123    H           AFX-1K
e10a
node1-01              Eth1/4/4       123    H           AFX-1K
e11a
node1-02              Eth1/9/1       138    H           AFX-1K
e1a
node1-02              Eth1/9/2       138    H           AFX-1K
e7a
node1-02              Eth1/9/3       138    H           AFX-1K
```

```
e10a
node1-02              Eth1/9/4       138    H           AFX-1K
e11a
node1-03              Eth1/15/1      138    H           AFX-1K
e1a
node1-03              Eth1/15/2      138    H           AFX-1K
e7a
node1-03              Eth1/15/3      138    H           AFX-1K
e10a
node1-03              Eth1/15/4      138    H           AFX-1K
e11a
node1-04              Eth1/16/1      173    H           AFX-1K
e1a
node1-04              Eth1/16/2      173    H           AFX-1K
e7a
node1-04              Eth1/16/3      173    H           AFX-1K
e10a
node1-04              Eth1/16/4      173    H           AFX-1K
e11a

Total entries displayed: 18


newcs2# show cdp neighbors

Capability Codes: R - Router, T - Trans-Bridge, B - Source-Route-Bridge
                  S - Switch, H - Host, I - IGMP, r - Repeater,
                  V - VoIP-Phone, D - Remotely-Managed-Device,
                  s - Supports-STP-Dispute

Device-ID          Local Intrfce  Hldtme Capability  Platform
Port ID
cs1(FDOXXXXXXXX)   Eth1/63        179    R S I s     N9K-C9332D-GX2B
Eth1/31
cs1(FDOXXXXXXXX)   Eth1/64        179    R S I s     N9K-C9332D-GX2B
Eth1/32
node1-01           Eth1/4/1       123    H           AFX-1K
e1a
node1-01           Eth1/4/2       123    H           AFX-1K
e7a
node1-01           Eth1/4/3       123    H           AFX-1K
e10a
node1-01           Eth1/4/4       123    H           AFX-1K
e11a
node1-02           Eth1/9/1       138    H           AFX-1K
e1a
```

```
node1-02          Eth1/9/2      138    H           AFX-1K
e7a
node1-02          Eth1/9/3      138    H           AFX-1K
e10a
node1-02          Eth1/9/4      138    H           AFX-1K
e11a
node1-03          Eth1/15/1     138    H           AFX-1K
e1a
node1-03          Eth1/15/2     138    H           AFX-1K
e7a
node1-03          Eth1/15/3     138    H           AFX-1K
e10a
node1-03          Eth1/15/4     138    H           AFX-1K
e11a
node1-04          Eth1/16/1     173    H           AFX-1K
e1a
node1-04          Eth1/16/2     173    H           AFX-1K
e7a
node1-04          Eth1/16/3     173    H           AFX-1K
e10a
node1-04          Eth1/16/4     173    H           AFX-1K
e11a

Total entries displayed: 18
```

Step 1: Prepare for replacement

1. If AutoSupport is enabled on this cluster, suppress automatic case creation by invoking an AutoSupport message:

   ```
   system node autosupport invoke -node * -type all -message MAINT=xh
   ```

   where x is the duration of the maintenance window in hours.

   > The AutoSupport message notifies technical support of this maintenance task so that automatic case creation is suppressed during the maintenance window.

2. Install the appropriate RCF and image on the switch, newcs2, and make any necessary site preparations.

   If necessary, verify, download, and install the appropriate versions of the RCF and NX-OS software for the new switch. If you have verified that the new switch is correctly set up and does not need updates to the RCF and NX-OS software, continue to step 2.

   a. Go to the *NetApp Cluster and Management Network Switches Reference Configuration File Description Page* on the NetApp Support Site.

   b. Click the link for the *Cluster Network and Management Network Compatibility Matrix*, and then note the required switch software version.

c. Click your browser's back arrow to return to the Description page, click **CONTINUE**, accept the license agreement, and then go to the Download page.

d. Follow the steps on the Download page to download the correct RCF and NX-OS files for the version of ONTAP software you are installing.

3. On the new switch, log in as admin and shut down all of the ports that will be connected to the node cluster interfaces (ports 1/1 to 1/64).

   If the switch that you are replacing is not functional and is powered down, go to Step 4. The LIFs on the cluster nodes should have already failed over to the other cluster port for each node.

   Show example

```
newcs2# config
newcs2(config)# interface e1/1/1-4,e1/2/1-4,e1/3/1-4,e1/4/1-
4,e1/5/1-4,e1/6/1-4,e1/7/1-4,e1/8/1-4
newcs2(config-if-range)# shutdown
newcs2(config)# interface e1/9/1-4,e1/10/1-4,e1/11/1-4,e1/12/1-
4,e1/13/1-4,e1/14/1-4,e1/15/1-4,e1/16/1-4
newcs2(config-if-range)# shutdown
newcs2(config)# interface e1/17/1-4,e1/18/1-4,e1/19/1-4,e1/20/1-
4,e1/21/1-4,e1/22/1-4,e1/23/1-4,e1/24/1-4
csnewcs21(config-if-range)# shutdown
newcs2(config)# interface e1/25/1-4,e1/26/1-4,e1/27/1-4,e1/28/1-
4,e1/29/1-4,e1/30/1-4,e1/31/1-4,e1/32/1-4
newcs2(config-if-range)# shutdown
newcs2(config)# interface e1/33/1-4,e1/34/1-4,e1/35/1-4,e1/36/1-
4,e1/37/1-4,e1/38/1-4,e1/39/1-4,e1/40/1-4
newcs2(config-if-range)# shutdown
newcs2(config)# interface e1/41/1-4,e1/42/1-4,e1/43/1-4,e1/44/1-
4,e1/35/1-4,e1/46/1-4,e1/47/1-4,e1/48/1-4
newcs2(config-if-range)# shutdown
newcs2(config)# interface e1/49/1-4,e1/50/1-4,e1/51/1-4,e1/52/1-
4,e1/53/1-4,e1/54/1-4,e1/55/1-4,e1/56/1-4
newcs2(config-if-range)# shutdown\
newcs2(config)# interface e1/57/1-4,e1/58/1-4,e1/59/1-4,e1/60/1-
4,e1/61/1-4,e1/62/1-4
newcs2(config-if-range)# shutdown
newcs2(config-if-range)# exit
newcs2(config)# exit
```

4. Verify that all cluster LIFs have auto-revert enabled:

```
network interface show -vserver Cluster -fields auto-revert
```

Show example

```
cluster1::> network interface show -vserver Cluster -fields auto-
revert

             Logical
Vserver      Interface        Auto-revert
------------ ---------------- -------------
Cluster      node1-01_clus1   true
Cluster      node1-01_clus2   true
Cluster      node1-02_clus1   true
Cluster      node1-02_clus2   true
Cluster      node1-03_clus1   true
Cluster      node1-03_clus2   true
Cluster      node1-04_clus1   true
Cluster      node1-04_clus2   true

8 entries were displayed.
```

5. Verify the connectivity of the remote cluster interfaces:

   a. You can use the `network interface check cluster-connectivity show` command to display the details of an accessibility check for cluster connectivity:

      ```
      network interface check cluster-connectivity show
      ```

Show example

```
cluster1::*> network interface check cluster-connectivity show
                                    Source          Destination
Packet
Node      Date                      LIF             LIF
Loss
--------- ------------------------- --------------
-------------- -----------
node1-01
          6/4/2025 03:13:33 -04:00   node1-01_clus2  node1-
02_clus1  none
          6/4/2025 03:13:34 -04:00   node1-01_clus2  node1-
02_clus2  none
node1-02
          6/4/2025 03:13:33 -04:00   node1-02_clus2  node1-
01_clus1  none
          6/4/2025 03:13:34 -04:00   node1-02_clus2  node1-
01_clus2  none
.
.
.
```

b. Alternatively, you can also use the `cluster ping-cluster -node <node-name>` command to check the connectivity:

```
cluster ping-cluster -node <node-name>
```

Show example

```
cluster1::*> cluster ping-cluster -node local
Host is node2
Getting addresses from network interface table...
Cluster node1_clus1 169.254.209.69 node1 e0a
Cluster node1_clus2 169.254.49.125 node1 e0b
Cluster node2_clus1 169.254.47.194 node2 e0a
Cluster node2_clus2 169.254.19.183 node2 e0b
Local = 169.254.47.194 169.254.19.183
Remote = 169.254.209.69 169.254.49.125
Cluster Vserver Id = 4294967293
Ping status:
....
Basic connectivity succeeds on 4 path(s)
Basic connectivity fails on 0 path(s)
................
Detected 9000 byte MTU on 4 path(s):
Local 169.254.47.194 to Remote 169.254.209.69
Local 169.254.47.194 to Remote 169.254.49.125
Local 169.254.19.183 to Remote 169.254.209.69
Local 169.254.19.183 to Remote 169.254.49.125
Larger than PMTU communication succeeds on 4 path(s)
RPC status:
2 paths up, 0 paths down (tcp check)
2 paths up, 0 paths down (udp check)
```

Step 2: Configure cables and ports

1. Shut down the ISL ports 1/63 and 1/64 on the Nexus 9364D-GX2A switch cs1.

```
cs1# config
Enter configuration commands, one per line. End with CNTL/Z.
cs1(config)# interface e1/63-64
cs1(config-if-range)# shutdown
cs1(config-if-range)# exit
cs1(config)# exit
```

2. Remove all of the cables from the Nexus 9364D-GX2B cs2 switch, and then connect them to the same ports on the Nexus 9364D-GX2A newcs2 switch.
3. Bring up the ISLs ports 1/63 and 1/64 between the cs1 and newcs2 switches, and then verify the port channel operation status.

   Port-Channel should indicate Po1(SU) and Member Ports should indicate Eth1/63(P) and Eth1/64(P).

Show example

This example enables ISL ports 1/63 and 1/64 and displays the port channel summary on switch cs1:

```
cs1# config
Enter configuration commands, one per line. End with CNTL/Z.
cs1(config)# interface e1/63-64
cs1(config-if-range)# no shutdown
cs1(config-if-range)# exit
cs1(config)# exit
cs1#
cs1(config-if-range)# show port-channel summary
Flags:  D - Down        P - Up in port-channel (members)
        I - Individual  H - Hot-standby (LACP only)
        s - Suspended   r - Module-removed
        b - BFD Session Wait
        S - Switched    R - Routed
        U - Up (port-channel)
        p - Up in delay-lacp mode (member)
        M - Not in use. Min-links not met
--------------------------------------------------------------------------
------------
Group Port-        Type     Protocol  Member Ports
      Channel
--------------------------------------------------------------------------
------------
11     Po1(SU)     Eth      LACP      Eth1/63(P)   Eth1/64(P)
999    Po999(SD)   Eth      NONE      --
```

4. Verify that port e7b is up on all nodes:

```
network port show ipspace Cluster
```

Show example

The output should be similar to the following:

```
cluster1::*> network port show -ipspace Cluster

Node: node1-01

Ignore
                                                  Speed(Mbps) Health
Health
Port      IPspace      Broadcast Domain Link MTU  Admin/Oper  Status
Status
--------- ------------ ---------------- ---- ---- -----------
-------- ------
e7a       Cluster      Cluster          up   9000  auto/100000
healthy false
e7b       Cluster      Cluster          up   9000  auto/100000
healthy false


Node: node1-02

Ignore
                                                  Speed(Mbps) Health
Health
Port      IPspace      Broadcast Domain Link MTU  Admin/Oper  Status
Status
--------- ------------ ---------------- ---- ---- -----------
-------- ------
e7a       Cluster      Cluster          up   9000  auto/100000
healthy false
e7b       Cluster      Cluster          up   9000  auto/100000
healthy false


Node: node1-03

Ignore
                                                  Speed(Mbps) Health
Health
Port      IPspace      Broadcast Domain Link MTU  Admin/Oper  Status
Status
--------- ------------ ---------------- ---- ---- -----------
-------- ------
e7a       Cluster      Cluster          up   9000  auto/100000
```

```
healthy false
e7b       Cluster      Cluster          up   9000  auto/100000
healthy false


Node: node1-04

Ignore
                                                  Speed(Mbps) Health
Health
Port      IPspace      Broadcast Domain Link MTU  Admin/Oper  Status
Status
--------- ------------ ---------------- ---- ---- -----------
-------- ------
e7a       Cluster      Cluster          up   9000  auto/100000
healthy false
e7b       Cluster      Cluster          up   9000  auto/100000
healthy false

8 entries were displayed.
```

5. On the same node you used in the previous step, revert the cluster LIF associated with the port in the previous step by using the network interface revert command.

Show example

In this example, LIF node1-01_clus2 on node1-01 is successfully reverted if the Home value is true and the port is e7b.

The following commands return LIF `node1-01_clus2` on `node1-01` to home port `e7a` and displays information about the LIFs on both nodes. Bringing up the first node is successful if the Is Home column is true for both cluster interfaces and they show the correct port assignments, in this example `e7a` and `e7b` on node1-01.

```
cluster1::*> network interface show -vserver Cluster

            Logical         Status     Network            Current
Current Is
Vserver     Interface       Admin/Oper Address/Mask       Node
Port    Home
----------- --------------- ---------- ------------------ ----------
------- -----
Cluster
            node1-01_clus1  up/up      169.254.209.69/16  node1-01
e7a     true
            node1-01_clus2  up/up      169.254.49.125/16  node1-01
e7b     true
            node1-02_clus1  up/up      169.254.47.194/16  node1-02
e7b     true
            node1-02_clus2  up/up      169.254.19.183/16  node1-02
e7a     false
            .
            .
            .
```

6. Display information about the nodes in a cluster:

   `cluster show`

Show example

This example shows that the node health for node1 and node2 in this cluster is true:

```
cluster1::*> cluster show

Node          Health  Eligibility
------------- ------- ------------
node1-01      false   true
node1-02      true    true
node1-03      true    true
node1-04      true    true
```

7. Verify that all physical cluster ports are up:

```
network port show ipspace Cluster
```

Show example

```
cluster1::*> network port show -ipspace Cluster

Node: node1-01

Ignore
                                                  Speed(Mbps) Health
Health
Port      IPspace      Broadcast Domain Link MTU  Admin/Oper  Status
Status
--------- ------------ ---------------- ---- ---- -----------
-------- ------
e7a       Cluster      Cluster          up   9000  auto/100000
healthy false
e7b       Cluster      Cluster          up   9000  auto/100000
healthy false


Node: node1-02

Ignore
                                                  Speed(Mbps) Health
Health
Port      IPspace      Broadcast Domain Link MTU  Admin/Oper  Status
Status
--------- ------------ ---------------- ---- ---- -----------
-------- ------
e7a       Cluster      Cluster          up   9000  auto/100000
healthy false
e7b       Cluster      Cluster          up   9000  auto/100000
healthy false
.
.
.
```

8. Verify the connectivity of the remote cluster interfaces:

   a. You can use the `network interface check cluster-connectivity show` command to display the details of an accessibility check for cluster connectivity:

      ```
      network interface check cluster-connectivity show
      ```

Show example

```
cluster1::*> network interface check cluster-connectivity show
                                    Source          Destination
Packet
Node      Date                      LIF             LIF
Loss
--------- ------------------------- --------------- ---------------
-----------
node1-01
          6/4/2025 03:13:33 -04:00   node1-01_clus2  node1-02_clus1
none
          6/4/2025 03:13:34 -04:00   node1-01_clus2  node1-02_clus2
none
node1-02
          6/4/2025 03:13:33 -04:00   node1-02_clus2  node1-01_clus1
none
          6/4/2025 03:13:34 -04:00   node1-02_clus2  node1-01_clus2
none
.
.
.
```

a. Alternatively, you can also use the `cluster ping-cluster -node <node-name>` command to check the connectivity:

   `cluster ping-cluster -node <node-name>`

Show example

```
cluster1::*> cluster ping-cluster -node local
Host is node2
Getting addresses from network interface table...
Cluster node1_clus1 169.254.209.69 node1 e0a
Cluster node1_clus2 169.254.49.125 node1 e0b
Cluster node2_clus1 169.254.47.194 node2 e0a
Cluster node2_clus2 169.254.19.183 node2 e0b
Local = 169.254.47.194 169.254.19.183
Remote = 169.254.209.69 169.254.49.125
Cluster Vserver Id = 4294967293
Ping status:
....
Basic connectivity succeeds on 4 path(s)
Basic connectivity fails on 0 path(s)
................
Detected 9000 byte MTU on 4 path(s):
Local 169.254.47.194 to Remote 169.254.209.69
Local 169.254.47.194 to Remote 169.254.49.125
Local 169.254.19.183 to Remote 169.254.209.69
Local 169.254.19.183 to Remote 169.254.49.125
Larger than PMTU communication succeeds on 4 path(s)
RPC status:
2 paths up, 0 paths down (tcp check)
2 paths up, 0 paths down (udp check)
```

Step 3: Verify the configuration

1. Verify the health of all the ports on the cluster.
   a. **Cluster ports**
      i. Verify that cluster ports are up and healthy across all nodes in the cluster:

```
network port show ipspace Cluster
```

```
network interface show -vserver cluster
```

```
network device-discovery show -protocol cdp
```

```
show cdp neighbors
```

Show example

```
cluster1::*> network port show -ipspace Cluster
Node: node1-01

Ignore
                                                  Speed(Mbps)
Health   Health
Port      IPspace      Broadcast Domain Link MTU  Admin/Oper
Status   Status
--------- ------------ ---------------- ---- ---- -----------
-------- ------
e7a       Cluster      Cluster          up   9000  auto/100000
healthy false
e7b       Cluster      Cluster          up   9000  auto/100000
healthy false


Node: node1-02

Ignore
                                                  Speed(Mbps)
Health   Health
Port      IPspace      Broadcast Domain Link MTU  Admin/Oper
Status   Status
--------- ------------ ---------------- ---- ---- -----------
-------- ------
e7a       Cluster      Cluster          up   9000  auto/100000
healthy false
e7b       Cluster      Cluster          up   9000  auto/100000
healthy false


Node: node1-03

Ignore
                                                  Speed(Mbps)
Health   Health
Port      IPspace      Broadcast Domain Link MTU  Admin/Oper
Status   Status
--------- ------------ ---------------- ---- ---- -----------
-------- ------
e7a       Cluster      Cluster          up   9000  auto/100000
healthy false
e7b       Cluster      Cluster          up   9000  auto/100000
healthy false
```

```
Node: node1-04

Ignore
                                                          Speed(Mbps)
Health   Health
Port      IPspace      Broadcast Domain Link MTU  Admin/Oper
Status   Status
--------- ------------ ---------------- ---- ---- -----------
-------- ------
e7a       Cluster      Cluster          up   9000  auto/100000
healthy false
e7b       Cluster      Cluster          up   9000  auto/100000
healthy false


cluster1::*> network interface show -vserver cluster

          Logical         Status     Network
Current       Current Is
Vserver   Interface       Admin/Oper Address/Mask       Node
Port    Home
--------- --------------- ---------- ------------------
------------- ------- ----
Cluster
          node1-01_clus1  up/up      169.254.209.69/16  node1-
01      e7a     true
          node1-01_clus2  up/up      169.254.49.125/16  node1-
01      e7b     true
          node1-02_clus1  up/up      169.254.47.194/16  node1-
02      e7b     true
          node1-02_clus2  up/up      169.254.19.183/16  node1-
02      e7a     false
            .
            .
            .

cluster1::> network device-discovery show -protocol cdp

Node/       Local  Discovered
Protocol    Port   Device (LLDP: ChassisID)  Interface
Platform
----------- ------ ------------------------- ----------------
----------------
node1-01/cdp
```

```
            e10a   cs1(FLMXXXXXXXX)          Ethernet1/16/3
N9K-C9364D-GX2A
            e10b   cs2(FDOXXXXXXXX)          Ethernet1/16/3
N9K-C9364D-GX2A
            e11a   cs1(FLMXXXXXXXX)          Ethernet1/16/4
N9K-C9364D-GX2A
            e11b   cs2(FDOXXXXXXXX)          Ethernet1/16/4
N9K-C9364D-GX2A
            e1a    cs1(FLMXXXXXXXX)          Ethernet1/16/1
N9K-C9364D-GX2A
            e1b    cs2(FDOXXXXXXXX)          Ethernet1/16/1
N9K-C9364D-GX2A
            .
            .
            .
            e7a    cs1(FLMXXXXXXXX)          Ethernet1/16/2
N9K-C9364D-GX2A
            e7b    cs2(FDOXXXXXXXX)          Ethernet1/16/2
N9K-C9364D-GX2A
.
.
.

cs1# show cdp neighbors

Capability Codes: R - Router, T - Trans-Bridge, B - Source-
Route-Bridge
                  S - Switch, H - Host, I - IGMP, r -
Repeater,
                  V - VoIP-Phone, D - Remotely-Managed-Device,
                  s - Supports-STP-Dispute

Device-ID            Local Intrfce  Hldtme Capability
Platform      Port ID
newcs2(FDOXXXXXXXX)   Eth1/63        179    R S I s     N9K-
C9332D-GX2B   Eth1/31
newcs2(FDOXXXXXXXX)   Eth1/64        179    R S I s     N9K-
C9332D-GX2B   Eth1/32
node1-01              Eth1/4/1       123    H           AFX-1K
e1a
node1-01              Eth1/4/2       123    H           AFX-1K
e7a
node1-01              Eth1/4/3       123    H           AFX-1K
e10a
node1-01              Eth1/4/4       123    H           AFX-1K
e11a
```

```
node1-02              Eth1/9/1       138    H           AFX-1K
e1a
node1-02              Eth1/9/2       138    H           AFX-1K
e7a
node1-02              Eth1/9/3       138    H           AFX-1K
e10a
node1-02              Eth1/9/4       138    H           AFX-1K
e11a
node1-03              Eth1/15/1      138    H           AFX-1K
e1a
node1-03              Eth1/15/2      138    H           AFX-1K
e7a
node1-03              Eth1/15/3      138    H           AFX-1K
e10a
node1-03              Eth1/15/4      138    H           AFX-1K
e11a
node1-04              Eth1/16/1      173    H           AFX-1K
e1a
node1-04              Eth1/16/2      173    H           AFX-1K
e7a
node1-04              Eth1/16/3      173    H           AFX-1K
e10a
node1-04              Eth1/16/4      173    H           AFX-1K
e11a

Total entries displayed: 18


newcs2# show cdp neighbors

Capability Codes: R - Router, T - Trans-Bridge, B - Source-
Route-Bridge
                  S - Switch, H - Host, I - IGMP, r -
Repeater,
                  V - VoIP-Phone, D - Remotely-Managed-Device,
                  s - Supports-STP-Dispute

Device-ID          Local Intrfce  Hldtme Capability  Platform
Port ID
cs1(FDOXXXXXXXX)   Eth1/63        179    R S I s     N9K-
C9332D-GX2B   Eth1/31
cs1(FDOXXXXXXXX)   Eth1/64        179    R S I s     N9K-
C9332D-GX2B   Eth1/32
node1-01           Eth1/4/1       123    H           AFX-1K
e1a
node1-01           Eth1/4/2       123    H           AFX-1K
```

```
e7a
node1-01            Eth1/4/3       123    H            AFX-1K
e10a
node1-01            Eth1/4/4       123    H            AFX-1K
e11a
node1-02            Eth1/9/1       138    H            AFX-1K
e1a
node1-02            Eth1/9/2       138    H            AFX-1K
e7a
node1-02            Eth1/9/3       138    H            AFX-1K
e10a
node1-02            Eth1/9/4       138    H            AFX-1K
e11a
node1-03            Eth1/15/1      138    H            AFX-1K
e1a
node1-03            Eth1/15/2      138    H            AFX-1K
e7a
node1-03            Eth1/15/3      138    H            AFX-1K
e10a
node1-03            Eth1/15/4      138    H            AFX-1K
e11a
node1-04            Eth1/16/1      173    H            AFX-1K
e1a
node1-04            Eth1/16/2      173    H            AFX-1K
e7a
node1-04            Eth1/16/3      173    H            AFX-1K
e10a
node1-04            Eth1/16/4      173    H            AFX-1K
e11a

Total entries displayed: 18
```

b. **HA ports**

   i. Verify that all the HA ports are up with a healthy status:

   ```
   ha interconnect status show -node <node-name>
   ```

Show example

```
cluster1::*> ha interconnect status show -node node1-01
  (system ha interconnect status show)

                        Node: node1-01
                Link 0 Status: up
                Link 1 Status: up
            Is Link 0 Active: true
            Is Link 1 Active: true
          IC RDMA Connection: up
                        Slot: 0
               Debug Firmware: no


Interconnect Port 0 :
                   Port Name: e1a-17
                         MTU: 4096
             Link Information: ACTIVE


Interconnect Port 1 :
                   Port Name: e1b-18
                         MTU: 4096
             Link Information: ACTIVE

cluster1::*> ha interconnect status show -node node1-02
  (system ha interconnect status show)

                        Node: node1-02
                Link 0 Status: up
                Link 1 Status: up
            Is Link 0 Active: true
            Is Link 1 Active: true
          IC RDMA Connection: up
                        Slot: 0
               Debug Firmware: no


Interconnect Port 0 :
                   Port Name: e1a-17
                         MTU: 4096
             Link Information: ACTIVE


Interconnect Port 1 :
```

```
                  Port Name: e1b-18
                        MTU: 4096
           Link Information: ACTIVE
.
.
.
```

c. **Storage ports**

i. Verify that all the storage ports are up with a healthy status:

```
storage port show -port-type ENET
```

Show example

```
cluster1::*> storage port show -port-type ENET


                                     Speed
Node                Port Type  Mode    (Gb/s) State    Status
------------------ ---- ----- ------- ------ --------
-----------
node1-01
                    e10a ENET  -          100 enabled  online
                    e10b ENET  -          100 enabled  online
                    e11a ENET  -          100 enabled  online
                    e11b ENET  -          100 enabled  online
node1-02
                    e10a ENET  -          100 enabled  online
                    e10b ENET  -          100 enabled  online
                    e11a ENET  -          100 enabled  online
                    e11b ENET  -          100 enabled  online
node1-03
                    e10a ENET  -          100 enabled  online
                    e10b ENET  -          100 enabled  online
                    e11a ENET  -          100 enabled  online
node1-04
                    e10a ENET  -          100 enabled  online
                    e10b ENET  -          100 enabled  online
                    e11a ENET  -          100 enabled  online
                    e11b ENET  -          100 enabled  online
16 entries were displayed.
```

d. **Storage shelf ports**

i. Verify that all the storage shelf ports are up with a healthy status:

```
storage shelf port show
```

Show example

```
cluster1::*> storage shelf port show

Shelf ID Module State        Internal?
-------- -- ------ ---------- ---------
1.1
         0 A      connected    false
         1 A      connected    false
         2 A      connected    false
         3 A      connected    false
         4 A      connected    false
         5 A      connected    false
         6 A      connected    false
         7 A      connected    false
         8 B      connected    false
         9 B      connected    false
        10 B      connected    false
        11 B      connected    false
        12 B      connected    false
        13 B      connected    false
        14 B      connected    false
        15 B      connected    false

16 entries were displayed.
```

ii. Verify the connection status of all the storage shelf ports:

```
storage shelf port show -fields remote-device,remote-
port,connector-state
```

Show example

```
cluster1::*> storage shelf port show -fields remote-
device,remote-port,connector-state

shelf id connector-state remote-port    remote-device
----- -- -------------- -------------- -----------------
1.1   0  connected       Ethernet1/17/1 CX9332D-cs1
1.1   1  connected       Ethernet1/15/1 CX9364D-cs1
1.1   2  connected       Ethernet1/17/2 CX9332D-cs1
1.1   3  connected       Ethernet1/15/2 CX9364D-cs1
1.1   4  connected       Ethernet1/17/3 CX9332D-cs1
1.1   5  connected       Ethernet1/15/3 CX9364D-cs1
1.1   6  connected       Ethernet1/17/4 CX9332D-cs1
1.1   7  connected       Ethernet1/15/4 CX9364D-cs1
1.1   8  connected       Ethernet1/19/1 CX9332D-cs1
1.1   9  connected       Ethernet1/17/1 CX9364D-cs1
1.1   10 connected       Ethernet1/19/2 CX9332D-cs1
1.1   11 connected       Ethernet1/17/2 CX9364D-cs1
1.1   12 connected       Ethernet1/19/3 CX9332D-cs1
1.1   13 connected       Ethernet1/17/3 CX9364D-cs1
1.1   14 connected       Ethernet1/19/4 CX9332D-cs1
1.1   15 connected       Ethernet1/17/4 CX9364D-cs1

16 entries were displayed.
```

2. If you suppressed automatic case creation, re-enable it by invoking an AutoSupport message:

   ```
   system node autosupport invoke -node * -type all -message MAINT=END
   ```

What's next?

After you've replaced your switches, you configure switch health monitoring.

Cluster switches

Broadcom-supported BES-53248

Get started

Installation and setup workflow for BES-53248 switches

The BES-53248 is a bare metal switch designed to work in ONTAP clusters ranging from two to 24 nodes.

Follow these workflow steps to install and set up your to BES-53248 switches.

1. **Review the configuration requirements**

Review the configuration requirements for the BES-53248 cluster switch.

2. **Review the components and part numbers**

Review the components and part numbers for the BES-53248 cluster switch.

3. **Review the required documentation**

Review specific switch and controller documentation to set up your BES-53248 switches and the ONTAP cluster.

4. **Install the hardware**

Install the switch hardware.

5. **Configure the software**

Configure the switch software.

Configuration requirements for BES-53248 cluster switches

For BES-53248 switch installation and maintenance, be sure to review EFOS and ONTAP support and configuration requirements.

EFOS and ONTAP support

See the NetApp Hardware Universe and Broadcom switches compatibility matrix for EFOS and ONTAP compatibility information with BES-53248 switches. EFOS and ONTAP support can vary by the specific machine type of the BES-53248 switch. For details of all BES-52348 switch machine types, see Components and part numbers for BES-53248 cluster switches. See What additional information do I need to install my equipment that is not in HWU?^ for more information about switch installation requirements.

Configuration requirements

To configure a cluster, you need the appropriate number and type of cables and cable connectors for the cluster switches. Depending on the type of cluster switch you are initially configuring, you need to connect to the switch console port with the included console cable.

Cluster switch port assignments

You can use the Broadcom-supported BES-53248 cluster switch port assignments table as a guide to configuring your cluster.

Switch ports	Ports usage
01-16	10/25GbE cluster port nodes, base configuration
17-48	10/25GbE cluster port nodes, with licenses
49-54	40/100GbE cluster port nodes, with licenses, added right to left
55-56	100GbE cluster Inter-Switch Link (ISL) ports, base configuration

See the Hardware Universe for more information on switch ports. See What additional information do I need to install my equipment that is not in HWU? for more information about switch installation requirements.

Port group speed constraint

- On BES-53248 cluster switches, the 48 10/25GbE (SFP28/SFP+) ports are combined into 12 x 4-port groups as follows: Ports 1-4, 5-8, 9-12, 13-16, 17-20, 21-24, 25-28, 29-32, 33-36, 37-40, 41-44, and 45-48.
- The SFP28/SFP+ port speed must be the same (10GbE or 25GbE) across all ports in the 4-port group.

Additional requirements

- If you purchase additional licenses, see Activate newly licenses ports for details on how to activate them.
- If SSH is active, you must re-enable it manually after running the command `erase startup-config` and rebooting the switch.

What's next

After you've reviewed the configuration requirements, you can confirm your components and part numbers.

Components and part numbers for BES-53248 cluster switches

For BES-53248 switch installation and maintenance, be sure to review the list of components and part numbers.

The following table lists the part number, description, and minimum EFOS and ONTAP versions for the BES-53248 cluster switch components, including rack-mount rail kit details.

> A minimum EFOS version of **3.10.0.3** is required for part numbers **X190005-B** and **X190005R-B**.

Part number	Description	Minimum EFOS version	Minimum ONTAP version
X190005-B	BES-53248-B/IX8, CLSW, 16PT10/25GB, PTSX (PTSX = Port Side Exhaust)	3.10.0.3	9.8
X190005R-B	BES-53248-B/IX8, CLSW, 16PT10/25GB, PSIN (PSIN = Port Side Intake)	3.10.0.3	9.8
X190005	BES-53248, CLSW, 16Pt10/25GB, PTSX, BRDCM SUPP	3.4.4.6	9.5P8
X190005R	BES-53248, CLSW, 16Pt10/25GB, PSIN, BRDCM SUPP	3.4.4.6	9.5P8
X-RAIL-4POST-190005	Rack mount rail kit Ozeki 4 post 19"	N/A	N/A

Note the following information with regards to machine types:

Machine type	Minimum EFOS version
BES-53248A1	3.4.4.6
BES-53248A2	3.10.0.3
BES-53248A3	3.10.0.3

You can determine your specific machine type by using the command: `show version`

Show example

```
(cs1)# show version

Switch: cs1

System Description.............................. EFOS, 3.10.0.3, Linux
5.4.2-b4581018, 2016.05.00.07
Machine Type.................................... BES-53248A3
Machine Model................................... BES-53248
Serial Number................................... QTWCU225xxxxx
Part Number..................................... 1IX8BZxxxxx
Maintenance Level............................... a3a
Manufacturer.................................... QTMC
Burned In MAC Address........................... C0:18:50:F4:3x:xx
Software Version................................ 3.10.0.3
Operating System................................ Linux 5.4.2-b4581018
Network Processing Device....................... BCM56873_A0
.
.
.
```

What's next

After you've confirmed your components and part numbers, you can review the required documentation.

Documentation requirements for BES-53248 cluster switches

For BES-53248 switch installation and maintenance, be sure to review the specific switch and controller documentation.

Broadcom documentation

To set up the BES-53248 cluster switch, you need the following documents available from the Broadcom Support Site: Broadcom Ethernet Switch Product Line

Document title	Description
EFOS Administrator's Guide v3.4.3	Provides examples of how to use the BES-53248 switch in a typical network.
EFOS CLI Command Reference v3.4.3	Describes the command-line interface (CLI) commands you use to view and configure the BES-53248 software.
EFOS Getting Started Guide v3.4.3	Provides detailed information about for the BES-53248 switch.

Document title	Description
EFOS SNMP Reference Guide v3.4.3	Provides examples of how to use the BES-53248 switch in a typical network.
EFOS Scaling Parameters and Values v3.4.3	Describes the default scaling parameters with which EFOS software is delivered and validated on the supported platforms.
EFOS Functional Specifications v3.4.3	Describes the specifications for the EFOS software on the supported platforms.
EFOS Release Notes v3.4.3	Provides release-specific information about BES-53248 software.
Cluster Network and Management Network Compatibility Matrix	Provides information on network compatibility. The matrix is available from the BES-53248 switch download site at Broadcom cluster switches.

ONTAP systems documentation and KB articles

To set up an ONTAP system, you need the following documents from the NetApp Support Site at mysupport.netapp.com or the Knowledgebase (KB) site at kb.netapp.com.

Name	Description
NetApp Hardware Universe	Describes the power and site requirements for all NetApp hardware, including system cabinets, and provides information on the relevant connectors and cable options to use along with their part numbers.
Controller-specific *Installation and Setup Instructions*	Describes how to install NetApp hardware.
ONTAP 9	Provides detailed information about all aspects of the ONTAP 9 release.
How to add additional port licensing for the Broadcom-supported BES-53248 switch	Provides detailed information on adding port licenses. Go to the KB article.

Install the hardware

Hardware install workflow for BES-53248 switches

To install and configure the hardware for a BES-53248 cluster switch, follow these steps:

1. **Install the switch hardware**

Install and configure the BES-53248 switch hardware.

2. **Review cabling and configuration**

Review the cabling and configuration considerations for the BES-53248 cluster switch.

Install the hardware for the BES-53248 cluster switch

To install the BES-53248 hardware, refer to Broadcom's documentation.

Steps

1. Review the configuration requirements.
2. Follow the instructions in the Broadcom-supported BES-53248 Cluster Switch Installation Guide.

What's next?

After you've installed the hardware for the switch, you can review cabling and configuration requirements.

Review cabling and configuration considerations

Before configuring your Broadcom BES-53248 switch, review the following considerations.

Cluster port switch assignments

You can use the Broadcom-supported BES-53248 cluster switch port assignments table as a guide to configure your cluster.

Switch ports	Ports usage
0-16	10/25GbE cluster port nodes, base configuration
17-48	10/25GbE cluster port nodes, with licenses
49-54	40/100GbE cluster port nodes, with licenses, added right to left
55-56	100GbE cluster Inter-Switch Link (ISL) ports, base configuration

See the Hardware Universe for more information on switch ports. See What additional information do I need to install my equipment that is not in HWU? for more information about switch installation requirements.

Port group speed constraint

- On BES-53248 cluster switches, the 48 10/25GbE (SFP28/SFP+) ports are combined into 12 x 4-port groups as follows: Ports 1-4, 5-8, 9-12, 13-16, 17-20, 21-24, 25-28, 29-32, 33-36, 37-40, 41-44, and 45-48.
- The SFP28/SFP+ port speed must be the same (10GbE or 25GbE) across all ports in the 4-port group.
- If speeds in a 4-port group are different, the switch ports will not operate correctly.

FEC requirements

- For 25G ports with copper cables, see the following table for details.

If the Controller side is `auto`, the switch side is set to FEC 25G.

FAS2820 FEC			Switch FEC			
write	read		write	read		link status
	requested_fec	negotiated_fec		Configured FEC Mode	Physical FEC Status	
fc	FC-FEC/BASE-R	none	No FEC	FEC Disabled	FEC Disabled	UP
fc	FC-FEC/BASE-R	FC-FEC/BASE-R	FEC 25G	FEC 25G	CL-74	UP
auto	RS-FEC	none	FEC 25G	FEC 25G	CL74	UP
auto	RS-FEC	none	No FEC	FEC Disabled	FEC Disabled	UP
none	none	none	No FEC	FEC Disabled	FEC Disabled	UP
none	none	none	FEC 25G	FEC 25G	CL74	UP
rs	RS-FEC	none	FEC 25G	FEC 25G	CL74	UP
rs	RS-FEC	none	No FEC	FEC Disabled	FEC Disabled	UP

- For 25G ports with Fiber/Optical cables, see the following table for details:

FAS2820 FEC			Switch FEC			
write	read		write	read		link status
	requested_fec	negotiated_fec		Configured FEC Mode	Physical FEC Status	
fc	FC-FEC/BASE-R	none	No FEC	FEC Disabled	FEC Disabled	DOWN
fc	**FC-FEC/BASE-R**	**FC-FEC/BASE-R**	**FEC 25G**	**FEC 25G**	**CL-74**	**UP**
auto	RS-FEC	none	FEC 25G	FEC 25G	CL74	DOWN
auto	RS-FEC	none	No FEC	FEC Disabled	FEC Disabled	DOWN
none	**none**	**none**	**No FEC**	**FEC Disabled**	**FEC Disabled**	**UP**
none	none	none	FEC 25G	FEC 25G	CL74	DOWN
rs	RS-FEC	none	FEC 25G	FEC 25G	CL74	DOWN
rs	RS-FEC	none	No FEC	FEC Disabled	FEC Disabled	DOWN

Bootarg implementation

Use the following command to set the 25G port FEC to either `auto` or `fc`, as required:

```
systemshell -node <node> -command sudo sysctl
dev.ice.<X>.requested_fec=<auto/fc>
```

- When set to **`auto`**:
  - The `auto` setting propagates the setting to hardware immediately and no reboot is required.
  - If `bootarg.cpk_fec_fc_eXx already exists`, it is deleted from the bootarg storage.
  - After a reboot, the `auto` setting remains in place since `auto` is the default FEC setting.
- When set to **`fc`**:
  - The `FC-FEC` setting propagates the setting to the hardware immediately and no reboot is required.
  - A new `bootarg.cpk_fec_fc_eXx` is created with the value set to "true".
  - After a reboot, `FC-FEC` setting remains in place for the driver code to use.

Configure the software

Software install workflow for BES-53248 switches

To install and configure the software for a BES-53248 cluster switch, follow these steps:

Configure the switch

Configure the BES-53248 cluster switch.

Install the EFOS software

Download and install the Ethernet Fabric OS (EFOS) software on the BES-53248 cluster switch.

Install licenses for BES-53248 cluster switches

Optionally, add new ports by purchasing and installing more licenses. The switch base model is licensed for 16 10GbE or 25GbE ports and two 100GbE ports.

Install the Reference Configuration File (RCF)

Install or upgrade the RCF on the BES-53248 cluster switch, and then verify the ports for an additional license after the RCF is applied.

Enable SSH on BES-53248 cluster switches

If you use the Ethernet Switch Health Monitor (CSHM) and log collection features, enable SSH on the switches.

Reset the switch to factory defaults

Erase the BES-53248 cluster switch settings.

Configure the BES-53248 cluster switch

Follow these steps to perform an initial setup of the BES-53248 cluster switch.

Before you begin

- Hardware is installed, as described in Install the hardware.
- You have reviewed the following:
  - Configuration requirements
  - Components and part numbers
  - Documentation requirements

About the examples

The examples in the configuration procedures use the following switch and node nomenclature:

- The NetApp switch names are `cs1` and `cs2`. The upgrade starts on the second switch, *cs2.*
- The cluster LIF names are `node1_clus1` and `node1_clus2` for node1, and `node2_clus1` and `node2_clus2` for node2.
- The IPspace name is Cluster.
- The `cluster1::>` prompt indicates the name of the cluster.
- The cluster ports on each node are named `e0a` and `e0b`. See the NetApp Hardware Universe for the actual cluster ports supported on your platform.
- The Inter-Switch Links (ISLs) supported for the NetApp switches are ports 0/55 and 0/56.
- The node connections supported for the NetApp switches are ports 0/1 through 0/16 with default licensing.
- The examples use two nodes, but you can have up to 24 nodes in a cluster.

Steps

1. Connect the serial port to a host or serial port.
2. Connect the management port (the RJ-45 wrench port on the left side of the switch) to the same network where your TFTP server is located.
3. At the console, set the host-side serial settings:
   - 115200 baud
   - 8 data bits
   - 1 stop bit
   - parity: none
   - flow control: none
4. Log in to the switch as `admin` and press **Enter** when prompted for a password.
   The default switch name is **routing**. At the prompt, enter `enable`. This gives you access to Privileged EXEC mode for switch configuration.

```
User: admin
Password:
(Routing)> enable
Password:
(Routing)#
```

5. Change the switch name to **cs2**.

```
(Routing)# hostname cs2
(cs2)#
```

6. To set a static IPv4 or IPv6 management address for the switch's service port:

IPv4

The serviceport is set to use DHCP by default. The IP address, subnet mask, and default gateway address are assigned automatically.

```
(cs2)# serviceport protocol none
(cs2)# network protocol none
(cs2)# serviceport ip <ip-address> <netmask> <gateway>
```

IPv6

The serviceport is set to use DHCP by default. The IP address, subnet mask, and default gateway address are assigned automatically.

```
(cs2)# serviceport protocol none
(cs2)# network protocol none
(cs2)# serviceport ipv6 <address>
(cs2)# serviceport ipv6 <gateway>
```

7. Verify the results using the command:

```
show serviceport
```

```
(cs2)# show serviceport
Interface Status.............................. Up
IP Address..................................... 172.19.2.2
Subnet Mask.................................... 255.255.255.0
Default Gateway................................ 172.19.2.254
IPv6 Administrative Mode....................... Enabled
IPv6 Prefix is ................................
fe80::dac4:97ff:fe71:123c/64
IPv6 Default Router............................ fe80::20b:45ff:fea9:5dc0
Configured IPv4 Protocol....................... DHCP
Configured IPv6 Protocol....................... None
IPv6 AutoConfig Mode........................... Disabled
Burned In MAC Address.......................... D8:C4:97:71:12:3C
```

8. Configure the domain and name server:

```
ip domain name <domain_name>
ip name server <server_name>
```

```
(cs2)# configure
(cs2)(Config)# ip domain name company.com
(cs2)(Config)# ip name server 10.10.99.1 10.10.99.2
(cs2)(Config)# exit
(cs2)#
```

9. Configure the NTP server.

EFOS 3.10.0.3 and later

Configure the time zone and time synchronization (NTP):

```
sntp server <server_name>
clock
```

```
(cs2)# configure
(cs2)(Config)# ntp server 10.99.99.5
(cs2)(Config)# clock timezone -7
(cs2)(Config)# exit
(cs2)#
```

EFOS 3.9.0.2 and earlier

Configure the time zone and time synchronization (SNTP):

```
sntp client mode <client_mode>
sntp server <server_name>
clock
```

```
(cs2)# configure
(cs2)(Config)# sntp client mode unicast
(cs2)(Config)# sntp server 10.99.99.5
(cs2)(Config)# clock timezone -7
(cs2)(Config)# exit
(cs2)#
```

10. Configure the time manually if you did not configure an NTP server in the previous step.

EFOS 3.10.0.3 and later

Configure the time manually.

`clock`

```
(cs2)# configure
(cs2)(Config)# clock summer-time recurring 1 sun mar 02:00 1 sun nov
02:00 offset 60 zone EST
(cs2)(Config)# clock timezone -5 zone EST
(cs2)(Config)# clock set 07:00:00
(cs2)(Config)# clock set 10/20/2023
(cs2)(Config)# show clock

07:00:11 EST(UTC-5:00) Oct 20 2023
No time source

(cs2)(Config)# exit
(cs2)#
```

EFOS 3.9.0.2 and earlier

Configure the time manually.

`clock`

```
(cs2)# configure
(cs2)(Config)# no sntp client mode
(cs2)(Config)# clock summer-time recurring 1 sun mar 02:00 1 sun nov
02:00 offset 60 zone EST
(cs2)(Config)# clock timezone -5 zone EST
(cs2)(Config)# clock set 07:00:00
(cs2)(Config)# clock set 10/20/2023
(cs2)(Config)# show clock

07:00:11 EST(UTC-5:00) Oct 20 2023
No time source

(cs2)(Config)# exit
(cs2)#
```

11. Save the running configuration to the startup configuration:

```
write memory
```

```
(cs2)# write memory

This operation may take a few minutes.
Management interfaces will not be available during this time.

Are you sure you want to save? (y/n) y

Config file 'startup-config' created successfully.

Configuration Saved!
```

What's next?

After you've configured your switches, you can install the EFOS software.

Install the EFOS software

Follow these steps to install the Ethernet Fabric OS (EFOS) software on the BES-53248 cluster switch.

EFOS software includes a set of advanced networking features and protocols for developing Ethernet and IP infrastructure systems. This software architecture is suitable for any network organizational device using applications that require thorough packet inspection or separation.

Prepare for installation

Before you begin

- This procedure is only suitable for new installations.
- Download the applicable Broadcom EFOS software for your cluster switches from the Broadcom Ethernet Switch Support site.
- Ensure the BES-53248 cluster switch is configured.

Install the software

Use one of the following methods to install the EFOS software:

- Method 1: Install EFOS. Use for most cases.
- Method 2: Install EFOS in ONIE mode. Use if one EFOS version is FIPS compliant and the other EFOS version is non-FIPS compliant.

Method 1: Install EFOS

Perform the following steps to install the EFOS software.

Steps

1. Log in to the switch serial console port or connect with SSH.
2. Use the `ping` command to verify connectivity to the server hosting EFOS, licenses, and the RCF file.

Show example

This example verifies that the switch is connected to the server at IP address 172.19.2.1:

```
(cs2)# ping 172.19.2.1
Pinging 172.19.2.1 with 0 bytes of data:

Reply From 172.19.2.1: icmp_seq = 0. time= 5910 usec.
```

3. Download the image file to the switch.

   Check the following table for information on supported copy protocols:

Protocol	Prerequisite
Trivial File Transfer Protocol (TFTP)	None
SSH File Transfer Protocol (SFTP)	Your software package must support secure management
FTP	Password required
XMODEM	None
YMODEM	None
ZMODEM	None
Secure Copy Protocol (SCP)	Your software package must support secure management
HTTP	CLI-based file transfers supported on selected platforms when a native WGET utility is available
HTTPS	CLI-based file transfers supported on selected platforms when a native WGET utility is available

   Copying the image file to the active image means that when you reboot, that image establishes the running EFOS version. The previous image remains available as a backup.

Show example

```
(cs2)# copy sftp://root@172.19.2.1//tmp/EFOS-3.10.0.3.stk active
Remote Password:**

Mode..................................... SFTP
Set Server IP.................................. 172.19.2.1
Path..................................... //tmp/
Filename..................................... EFOS-3.10.0.3.stk
Data Type.................................... Code
Destination Filename......................... active

Management access will be blocked for the duration of the transfer
Are you sure you want to start? (y/n) y
SFTP Code transfer starting...


File transfer operation completed successfully.
```

4. Display the boot images for the active and backup configuration:

   `show bootvar`

   Show example

```
(cs2)# show bootvar

Image Descriptions

 active :
 backup :

 Images currently available on Flash
----------------------------------------------------------------------
 unit      active      backup      current-active    next-active
----------------------------------------------------------------------
    1      3.7.0.4     3.7.0.4     3.7.0.4           3.10.0.3
```

5. Reboot the switch:

   `reload`

Show example

```
(cs2)# reload

The system has unsaved changes.
Would you like to save them now? (y/n) y

Config file 'startup-config' created successfully .
Configuration Saved!
System will now restart!
```

6. Log in again and verify the new version of the EFOS software:

```
show version
```

Show example

```
(cs2)# show version

Switch: 1

System Description..............................  BES-53248A1,
3.10.0.3, Linux 4.4.211-28a6fe76, 2016.05.00.04
Machine Type....................................  BES-53248A1,
Machine Model...................................  BES-53248
Serial Number...................................  QTFCU38260023
Maintenance Level...............................  A
Manufacturer....................................  0xbc00
Burned In MAC Address...........................  D8:C4:97:71:0F:40
Software Version................................  3.10.0.3
Operating System................................  Linux 4.4.211-
28a6fe76
Network Processing Device.......................  BCM56873_A0
CPLD Version....................................  0xff040c03

Additional Packages.............................  BGP-4
.............................................  QOS
.............................................  Multicast
.............................................  IPv6
.............................................  Routing
.............................................  Data Center
.............................................  OpEN API
.............................................  Prototype Open API
```

7. Complete the installation.
   Follow these four steps to reconfigure the switch:
   a. Install licenses
   b. Install the RCF file
   c. Enable SSH
   d. Configure switch health monitoring
8. Repeat steps 1 to 7 on the partner switch.

Method 2: Install EFOS in ONIE mode

You can perform the following steps if one EFOS version is FIPS compliant and the other EFOS version is non-FIPS compliant. These steps can be used to install the non-FIPS or FIPS compliant EFOS 3.7.x.x image from ONIE if the switch fails to boot.

Steps

1. Connect to a console that is attached to the serial port of the switch.
2. Boot the switch into ONIE installation mode.

   During boot, select ONIE when you see the prompt.

Show example

```
+-----------------------------------------------------------------
-+
|EFOS
|
|*ONIE
|
|
|
|
|
|
|
|
|
|
|
|
|
|
|
|
|
|
|
|
|
|
+-----------------------------------------------------------------
-+
```

After you select **ONIE**, the switch loads and presents you with several choices. Select **Install OS**.

Show example

```
+-----------------------------------------------------------------
-+
|*ONIE: Install OS
|
| ONIE: Rescue
|
| ONIE: Uninstall OS
|
| ONIE: Update ONIE
|
| ONIE: Embed ONIE
|
| DIAG: Diagnostic Mode
|
| DIAG: Burn-In Mode
|
|
|
|
|
|
|
|
|
|
|
+-----------------------------------------------------------------
-+
```

The switch boots into ONIE installation mode.

3. Stop the ONIE discovery and configure the Ethernet interface.

   When the following message appears, press **Enter** to invoke the ONIE console:

```
Please press Enter to activate this console. Info: eth0:  Checking
link... up.
 ONIE:/ #
```

   The ONIE discovery continues and messages are printed to the console.

```
Stop the ONIE discovery
ONIE:/ # onie-discovery-stop
discover: installer mode detected.
Stopping: discover... done.
ONIE:/ #
```

4. Configure the Ethernet interface of the switch management port and add the route using `ifconfig eth0 <ipAddress> netmask <netmask> up` and `route add default gw <gatewayAddress>`

```
ONIE:/ # ifconfig eth0 10.10.10.10 netmask 255.255.255.0 up
ONIE:/ # route add default gw 10.10.10.1
```

5. Verify that the server hosting the ONIE installation file is reachable:

   `ping`

   Show example

```
ONIE:/ # ping 50.50.50.50
PING 50.50.50.50 (50.50.50.50): 56 data bytes
64 bytes from 50.50.50.50: seq=0 ttl=255 time=0.429 ms
64 bytes from 50.50.50.50: seq=1 ttl=255 time=0.595 ms
64 bytes from 50.50.50.50: seq=2 ttl=255 time=0.369 ms
^C
--- 50.50.50.50 ping statistics ---
3 packets transmitted, 3 packets received, 0% packet loss
round-trip min/avg/max = 0.369/0.464/0.595 ms
ONIE:/ #
```

6. Install the new switch software:

   `ONIE:/ # onie-nos-install http://50.50.50.50/Software/onie-installer-x86_64`

Show example

```
ONIE:/ # onie-nos-install http://50.50.50.50/Software/onie-
installer-x86_64
discover: installer mode detected.
Stopping: discover... done.
Info: Fetching http://50.50.50.50/Software/onie-installer-3.7.0.4
...
Connecting to 50.50.50.50 (50.50.50.50:80)
installer            100% |*******************************| 48841k
0:00:00 ETA
ONIE: Executing installer: http://50.50.50.50/Software/onie-
installer-3.7.0.4
Verifying image checksum ... OK.
Preparing image archive ... OK.
```

The software installs and then reboots the switch. Let the switch reboot normally into the new EFOS version.

7. Log in and verify that the new switch software is installed:

   `show bootvar`

   Show example

```
(cs2)# show bootvar
Image Descriptions
active :
backup :
Images currently available on Flash
----    ----------- -------- --------------- ------------
unit    active      backup   current-active  next-active
----    ----------- -------- --------------- ------------
 1      3.7.0.4     3.7.0.4    3.7.0.4        3.10.0.3
(cs2) #
```

8. Complete the installation.
   The switch reboots with no configuration applied and resets to factory defaults. Follow these five steps to reconfigure the switch:
   a. Configure switch
   b. Install licenses
   c. Install the RCF file
   d. Enable SSH

e. Configure switch health monitoring

9. Repeat steps 1 to 8 on the partner switch.

What's next

After you've installed the EFOS software, you can install your licenses.

Install the Reference Configuration File (RCF) and license file

Beginning with EFOS 3.12.0.1, you can install the Reference Configuration File (RCF) and license file after configuring the BES-53248 cluster switch.

All ports are configured when you install the RCF, but you need to install your license to activate the configured ports.

Review requirements

Before you begin

Verify that the following are in place:

- A current backup of the switch configuration.
- A fully functioning cluster (no errors in the logs or similar issues).
- The current RCF, available from the Broadcom Cluster Switches page.
- A boot configuration in the RCF that reflects the desired boot images, required if you are installing only EFOS and keeping your current RCF version. If you need to change the boot configuration to reflect the current boot images, you must do so before reapplying the RCF so that the correct version is instantiated on future reboots.
- A console connection to the switch, required when installing the RCF from a factory-default state. This requirement is optional if you have used the Knowledge Base article How to clear configuration on a Broadcom interconnect switch while retaining remote connectivity to clear the configuration, beforehand.

Suggested documentation

Consult the switch compatibility table for the supported ONTAP and RCF versions. See the EFOS Software download page. Note that there can be command dependencies between the command syntax in the RCF and that found in versions of EFOS.

Install the configuration file

About the examples

The examples in this procedure use the following switch and node nomenclature:

- The names of the two BES-53248 switches are cs1 and cs2.
- The node names are cluster1-01, cluster1-02, cluster1-03, and cluster1-04.
- The cluster LIF names are cluster1-01_clus1, cluster1-01_clus2, cluster1-02_clus1, cluster1-02_clus2, cluster1-03_clus1, cluster1-03_clus2, cluster1-04_clus1, and cluster1-04_clus2.
- The `cluster1::*>` prompt indicates the name of the cluster.
- The examples in this procedure use four nodes. These nodes use two 10GbE cluster interconnect ports `e0a` and `e0b`. See the Hardware Universe to verify the correct cluster ports on your platforms.

The command outputs might vary depending on different releases of ONTAP.

About this task

The procedure requires the use of both ONTAP commands and Broadcom switch commands; ONTAP commands are used unless otherwise indicated.

No operational inter-switch link (ISL) is needed during this procedure. This is by design because RCF version changes can affect ISL connectivity temporarily. To ensure non-disruptive cluster operations, the following procedure migrates all the cluster LIFs to the operational partner switch while performing the steps on the target switch.

Before installing a new switch software version and RCFs, use the Knowledge Base article How to clear configuration on a Broadcom interconnect switch while retaining remote connectivity. If you must erase the switch settings completely, then you need to perform the basic configuration again. You must be connected to the switch using the serial console because a complete configuration erasure resets the configuration of the management network.

Step 1: Prepare for the installation

1. If AutoSupport is enabled on this cluster, suppress automatic case creation by invoking an AutoSupport message:

```
system node autosupport invoke -node * -type all -message MAINT=xh
```

where *x* is the duration of the maintenance window in hours.

The AutoSupport message notifies technical support of this maintenance task so that automatic case creation is suppressed during the maintenance window.

The following command suppresses automatic case creation for two hours:

```
cluster1::*> system node autosupport invoke -node \* -type all -message
MAINT=2h
```

2. Change the privilege level to advanced, entering **y** when prompted to continue:

```
set -privilege advanced
```

The advanced prompt (*>) appears.

3. Display the cluster ports on each node that are connected to the cluster switches:

```
network device-discovery show
```

Show example

```
cluster1::*> network device-discovery show
Node/       Local  Discovered
Protocol    Port   Device (LLDP: ChassisID)  Interface
Platform
----------- ------ ------------------------- ----------------
--------
cluster1-01/cdp
            e0a    cs1                       0/2               BES-
53248
            e0b    cs2                       0/2               BES-
53248
cluster1-02/cdp
            e0a    cs1                       0/1               BES-
53248
            e0b    cs2                       0/1               BES-
53248
cluster1-03/cdp
            e0a    cs1                       0/4               BES-
53248
            e0b    cs2                       0/4               BES-
53248
cluster1-04/cdp
            e0a    cs1                       0/3               BES-
53248
            e0b    cs2                       0/3               BES-
53248
cluster1::*>
```

4. Check the administrative and operational status of each cluster port.
   a. Verify that all the cluster ports are up with a healthy status:

```
network port show -ipspace Cluster
```

Show example

```
cluster1::*> network port show -ipspace Cluster

Node: cluster1-01

Ignore
                                                  Speed(Mbps)
Health   Health
Port      IPspace      Broadcast Domain Link MTU  Admin/Oper
Status   Status
--------- ------------ ---------------- ---- ---- -----------
-------- ------
e0a       Cluster      Cluster          up   9000  auto/100000
healthy false
e0b       Cluster      Cluster          up   9000  auto/100000
healthy false

Node: cluster1-02

Ignore
                                                  Speed(Mbps)
Health   Health
Port      IPspace      Broadcast Domain Link MTU  Admin/Oper
Status   Status
--------- ------------ ---------------- ---- ---- -----------
-------- ------
e0a       Cluster      Cluster          up   9000  auto/100000
healthy false
e0b       Cluster      Cluster          up   9000  auto/100000
healthy false
8 entries were displayed.

Node: cluster1-03

   Ignore
                                                  Speed(Mbps)
Health   Health
Port      IPspace      Broadcast Domain Link MTU  Admin/Oper
Status   Status
--------- ------------ ---------------- ---- ---- -----------
-------- ------
e0a       Cluster      Cluster          up   9000  auto/10000
healthy  false
e0b       Cluster      Cluster          up   9000  auto/10000
healthy  false
```

```
Node: cluster1-04

Ignore
                                                          Speed(Mbps)
Health   Health
Port      IPspace      Broadcast Domain Link MTU  Admin/Oper
Status   Status
--------- ------------ ---------------- ---- ---- -----------
-------- ------
e0a       Cluster      Cluster          up   9000  auto/10000
healthy  false
e0b       Cluster      Cluster          up   9000  auto/10000
healthy  false
cluster1::*>
```

b. Verify that all the cluster interfaces (LIFs) are on the home port:

```
network interface show -vserver Cluster
```

Show example

```
cluster1::*> network interface show -vserver Cluster
            Logical            Status     Network
Current      Current Is
Vserver     Interface          Admin/Oper Address/Mask      Node
Port    Home
----------- ------------------ ---------- -----------------
------------ ------- ----
Cluster
            cluster1-01_clus1  up/up     169.254.3.4/23
cluster1-01  e0a     true
            cluster1-01_clus2  up/up     169.254.3.5/23
cluster1-01  e0b     true
            cluster1-02_clus1  up/up     169.254.3.8/23
cluster1-02  e0a     true
            cluster1-02_clus2  up/up     169.254.3.9/23
cluster1-02  e0b     true
            cluster1-03_clus1  up/up     169.254.1.3/23
cluster1-03  e0a     true
            cluster1-03_clus2  up/up     169.254.1.1/23
cluster1-03  e0b     true
            cluster1-04_clus1  up/up     169.254.1.6/23
cluster1-04  e0a     true
            cluster1-04_clus2  up/up     169.254.1.7/23
cluster1-04  e0b     true
```

5. Verify that the cluster displays information for both cluster switches.

ONTAP 9.8 and later

Beginning with ONTAP 9.8, use the command:

```
system switch ethernet show -is-monitoring-enabled-operational true
```

```
cluster1::*> system switch ethernet show -is-monitoring-enabled
-operational true
Switch                      Type               Address          Model
--------------------------- ------------------ ----------------
---------------
cs1                         cluster-network    10.228.143.200   BES-
53248
           Serial Number: QTWCU22510008
            Is Monitored: true
                  Reason: None
        Software Version: 3.10.0.3
          Version Source: CDP/ISDP

cs2                         cluster-network    10.228.143.202   BES-
53248
           Serial Number: QTWCU22510009
            Is Monitored: true
                  Reason: None
        Software Version: 3.10.0.3
          Version Source: CDP/ISDP
cluster1::*>
```

ONTAP 9.7 and earlier

For ONTAP 9.7 and earlier, use the command:

```
system cluster-switch show -is-monitoring-enabled-operational true
```

```
cluster1::*> system cluster-switch show -is-monitoring-enabled
-operational true
Switch                      Type               Address          Model
--------------------------- ------------------ ----------------
---------------
cs1                         cluster-network    10.228.143.200   BES-
53248
           Serial Number: QTWCU22510008
            Is Monitored: true
                  Reason: None
        Software Version: 3.10.0.3
          Version Source: CDP/ISDP

cs2                         cluster-network    10.228.143.202   BES-
53248
           Serial Number: QTWCU22510009
            Is Monitored: true
                  Reason: None
        Software Version: 3.10.0.3
          Version Source: CDP/ISDP
cluster1::*>
```

6. Disable auto-revert on the cluster LIFs.

```
network interface modify -vserver Cluster -lif * -auto-revert false
```

Step 2: Configure ports

1. On switch cs2, confirm the list of ports that are connected to the nodes in the cluster.

```
show isdp neighbor
```

2. On cluster switch cs2, shut down the ports connected to the cluster ports of the nodes. For example, if ports 0/1 to 0/16 are connected to ONTAP nodes:

```
(cs2)> enable
(cs2)# configure
(cs2)(Config)# interface 0/1-0/16
(cs2)(Interface 0/1-0/16)# shutdown
(cs2)(Interface 0/1-0/16)# exit
(cs2)(Config)#
```

3. Verify that the cluster LIFs have migrated to the ports hosted on cluster switch cs1. This might take a few seconds.

```
network interface show -vserver Cluster
```

Show example

```
cluster1::*> network interface show -vserver Cluster
            Logical           Status     Network            Current
Current Is
Vserver     Interface         Admin/Oper Address/Mask       Node
Port    Home
----------- ----------------- ---------- ------------------
------------ ------- ----
Cluster
            cluster1-01_clus1 up/up      169.254.3.4/23
cluster1-01   e0a     true
            cluster1-01_clus2 up/up      169.254.3.5/23
cluster1-01   e0a     false
            cluster1-02_clus1 up/up      169.254.3.8/23
cluster1-02   e0a     true
            cluster1-02_clus2 up/up      169.254.3.9/23
cluster1-02   e0a     false
            cluster1-03_clus1 up/up      169.254.1.3/23
cluster1-03   e0a     true
            cluster1-03_clus2 up/up      169.254.1.1/23
cluster1-03   e0a     false
            cluster1-04_clus1 up/up      169.254.1.6/23
cluster1-04   e0a     true
            cluster1-04_clus2 up/up      169.254.1.7/23
cluster1-04   e0a     false
cluster1::*>
```

4. Verify that the cluster is healthy:

```
cluster show
```

Show example

```
cluster1::*> cluster show
Node                  Health  Eligibility   Epsilon
--------------------- ------- ------------  -------
cluster1-01           true    true          false
cluster1-02           true    true          false
cluster1-03           true    true          true
cluster1-04           true    true          false
```

5. If you have not already done so, save the current switch configuration by copying the output of the following command to a log file:

```
show running-config
```

6. Clean the configuration on switch cs2 and perform a basic setup.

> When updating or applying a new RCF, you must erase the switch settings and perform basic configuration. You must be connected to the switch using the serial console to erase switch settings. This requirement is optional if you have used the Knowledge Base article How to clear the configuration on a Broadcom interconnect switch while retaining remote connectivity to clear the configuration, beforehand.

> Clearing the configuration does not delete licenses.

a. SSH into the switch.

   Only proceed when all the cluster LIFs have been removed from the ports on the switch and the switch is prepared to have the configuration cleared.

b. Enter privilege mode:

```
(cs2)> enable
(cs2)#
```

c. Copy and paste the following commands to remove the previous RCF configuration (depending on the previous RCF version used, some commands might generate an error if a particular setting is not present):

```
clear config interface 0/1-0/56
y
clear config interface lag 1
y
configure
```

```
deleteport 1/1 all
no policy-map CLUSTER
no policy-map WRED_25G
no policy-map WRED_100G
no policy-map InShared
no policy-map InMetroCluster
no policy-map InCluster
no policy-map InClusterRdma
no class-map CLUSTER
no class-map HA
no class-map RDMA
no class-map c5
no class-map c4
no class-map CLUSTER
no class-map CLUSTER_RDMA
no class-map StorageSrc
no class-map StorageDst
no class-map RdmaSrc
no class-map RdmaDst
no classofservice dot1p-mapping
no random-detect queue-parms 0
no random-detect queue-parms 1
no random-detect queue-parms 2
no random-detect queue-parms 3
no random-detect queue-parms 4
no random-detect queue-parms 5
no random-detect queue-parms 6
no random-detect queue-parms 7
no cos-queue min-bandwidth
no cos-queue random-detect 0
no cos-queue random-detect 1
no cos-queue random-detect 2
no cos-queue random-detect 3
no cos-queue random-detect 4
no cos-queue random-detect 5
no cos-queue random-detect 6
no cos-queue random-detect 7
exit
vlan database
no vlan 17
no vlan 18
exit
```

d. Save the running configuration to the startup configuration:

```
(cs2)# write memory

This operation may take a few minutes.
Management interfaces will not be available during this time.

Are you sure you want to save? (y/n) y

Config file 'startup-config' created successfully.

Configuration Saved!
```

e. Perform a reboot of the switch:

```
(cs2)# reload

Are you sure you would like to reset the system? (y/n) y
```

f. Log in to the switch again using SSH to complete the RCF installation.

7. Record any customizations that were made in the previous RCF and apply these to the new RCF. For example, setting port speeds or hard-coding FEC mode.
8. Copy the RCF to the bootflash of switch cs2 using one of the following transfer protocols: FTP, HTTP, TFTP, SFTP, or SCP.

   This example shows HTTP being used to copy an RCF to the bootflash on switch cs2:

Show example

```
(cs2)# copy http://<ip-to-webserver>/path/to/BES-53248-RCF-v1.12-
Cluster-HA.txt nvram:reference-config

Mode..................................... HTTP
Set Server IP.............................. 172.19.2.1
Path..................................... <ip-to-
webserver>/path/to/
Filename................................. BES-53248-RCF-v1.12-
Cluster-HA.txt
Data Type................................ Unknown

Management access will be blocked for the duration of the transfer
Are you sure you want to start? (y/n) y
File transfer in progress.
Management access will be blocked for the duration of the transfer.
Please wait...
HTTP Unknown file type transfer starting...
Validating configuration script.....
Configuration script validated.
File transfer operation completed successfully.
```

9. Verify that the script was downloaded and saved under the file name you gave it:

   `script list`

Show example

```
(cs2)# script list

Configuration Script Name                 Size(Bytes)  Date of
Modification
----------------------------------------  -----------
--------------------
Reference-config.scr                      2680         2024 05 31
21:54:22
1 configuration script(s) found.
2045 Kbytes free.
```

10. Apply the script to the switch:

    `script apply`

Show example

```
(cs2)# script apply reference-config.scr

Are you sure you want to apply the configuration script? (y/n) y

The system has unsaved changes.
Would you like to save them now? (y/n) y
Config file 'startup-config' created successfully.
Configuration Saved!
...
...
Configuration script 'reference-config.scr' applied.
```

11. Install the license file.

Show example

```
(cs2)# copy http://<ip-to-webserver>/path/to/BES-53248-LIC.dat
nvram:license-key 1
Mode........................................... HTTP
Set Server IP.................................. 172.19.2.1
Path........................................... <ip-to-
webserver>/path/to/
Filename....................................... BES-53248-LIC.dat
Data Type...................................... license

Management access will be blocked for the duration of the transfer
Are you sure you want to start? (y/n) y

File transfer in progress. Management access will be blocked for the
duration of the transfer.

Please wait...

License Key transfer operation completed successfully.

System reboot is required.
(cs2)# write memory

This operation may take a few minutes.

Management interfaces will not be available during this time.
Are you sure you want to save? (y/n) y

Config file 'startup-config' created successfully.

Configuration Saved!

(cs2)# reload
Are you sure you would like to reset the system? (y/n) y
...
...
```

12. Examine the banner output from the `show clibanner` command. You must read and follow these instructions to verify the proper configuration and operation of the switch.

Show example

```
(cs2)# show clibanner

Banner Message configured :
=========================
BES-53248 Reference Configuration File v1.12 for Cluster/HA/RDMA

Switch   : BES-53248
Filename : BES-53248-RCF-v1.12-Cluster.txt
Date     : 11-04-2024
Version  : v1.12
Port Usage:
Ports 01 - 16: 10/25GbE Cluster Node Ports, base config
Ports 17 - 48: 10/25GbE Cluster Node Ports, with licenses
Ports 49 - 54: 40/100GbE Cluster Node Ports, with licenses, added
right to left
Ports 55 - 56: 100GbE Cluster ISL Ports, base config
NOTE:
- The 48 SFP28/SFP+ ports are organized into 4-port groups in terms
of port speed:
  Ports 1-4, 5-8, 9-12, 13-16, 17-20, 21-24, 25-28, 29-32, 33-36,
37-40, 41-44, 45-48
  The port speed should be the same (10GbE or 25GbE) across all
ports in a 4-port group
- If additional licenses are purchased, follow the 'Additional Node
Ports
  activated with Licenses' section for instructions
- If SSH is active, it will have to be re-enabled manually after
'erase startup-config'
  command has been executed and the switch rebooted"
```

13. On the switch, verify that the additional licensed ports appear after the RCF is applied:

```
show port all | exclude Detach
```

Show example

```
(cs2)# show port all | exclude Detach

                Admin     Physical     Physical   Link   Link
LACP   Actor
Intf      Type  Mode      Mode         Status     Status Trap
Mode   Timeout
--------- ------ --------- ------------ ---------- ------ -------
------ --------
0/1             Enable    Auto                    Down   Enable
Enable long
0/2             Enable    Auto                    Down   Enable
Enable long
0/3             Enable    Auto                    Down   Enable
Enable long
0/4             Enable    Auto                    Down   Enable
Enable long
0/5             Enable    Auto                    Down   Enable
Enable long
0/6             Enable    Auto                    Down   Enable
Enable long
0/7             Enable    Auto                    Down   Enable
Enable long
0/8             Enable    Auto                    Down   Enable
Enable long
0/9             Enable    Auto                    Down   Enable
Enable long
0/10            Enable    Auto                    Down   Enable
Enable long
0/11            Enable    Auto                    Down   Enable
Enable long
0/12            Enable    Auto                    Down   Enable
Enable long
0/13            Enable    Auto                    Down   Enable
Enable long
0/14            Enable    Auto                    Down   Enable
Enable long
0/15            Enable    Auto                    Down   Enable
Enable long
0/16            Enable    Auto                    Down   Enable
Enable long
0/49            Enable    40G Full                Down   Enable
Enable long
0/50            Enable    40G Full                Down   Enable
Enable long
```

```
0/51            Enable    100G Full               Down   Enable
Enable long
0/52            Enable    100G Full               Down   Enable
Enable long
0/53            Enable    100G Full               Down   Enable
Enable long
0/54            Enable    100G Full               Down   Enable
Enable long
0/55            Enable    100G Full               Down   Enable
Enable long
0/56            Enable    100G Full               Down   Enable
Enable long
```

14. On the switch, verify that your changes have been made:

```
show running-config
```

```
(cs2)# show running-config
```

15. Save the running configuration so that it becomes the startup configuration when you reboot the switch:

```
write memory
```

```
(cs2)# write memory
This operation may take a few minutes.
Management interfaces will not be available during this time.

Are you sure you want to save? (y/n) y

Config file 'startup-config' created successfully.

Configuration Saved!
```

16. Reboot the switch and verify that the running configuration is correct:

```
reload
```

```
(cs2)# reload

Are you sure you would like to reset the system? (y/n) y

System will now restart!
```

17. On cluster switch cs2, bring up the ports connected to the cluster ports of the nodes. For example, if ports 0/1 to 0/16 are connected to ONTAP nodes:

```
(cs2)> enable
(cs2)# configure
(cs2)(Config)# interface 0/1-0/16
(cs2)(Interface 0/1-0/16)# no shutdown
(cs2)(Interface 0/1-0/16)# exit
(cs2)(Config)#
```

18. Verify the ports on switch cs2:

```
show interfaces status all | exclude Detach
```

Show example

```
(cs1)# show interfaces status all | exclude Detach

                                Link    Physical    Physical
Media       Flow
Port       Name                 State   Mode        Status      Type
Control     VLAN
---------  -------------------  ------  ----------  ----------
----------  ----------  ------
.
.
.
0/16       10/25GbE Node Port   Down    Auto
Inactive    Trunk
0/17       10/25GbE Node Port   Down    Auto
Inactive    Trunk
0/18       10/25GbE Node Port   Up      25G Full    25G Full
25GBase-SR  Inactive    Trunk
0/19       10/25GbE Node Port   Up      25G Full    25G Full
25GBase-SR  Inactive    Trunk
.
.
.
0/50       40/100GbE Node Port  Down    Auto
Inactive    Trunk
0/51       40/100GbE Node Port  Down    Auto
Inactive    Trunk
0/52       40/100GbE Node Port  Down    Auto
Inactive    Trunk
0/53       40/100GbE Node Port  Down    Auto
Inactive    Trunk
0/54       40/100GbE Node Port  Down    Auto
Inactive    Trunk
0/55       Cluster   ISL Port   Up      Auto        100G Full
Copper      Inactive    Trunk
0/56       Cluster   ISL Port   Up      Auto        100G Full
Copper      Inactive    Trunk
```

19. Verify the health of cluster ports on the cluster.
    a. Verify that e0b ports are up and healthy across all nodes in the cluster:

```
network port show -ipspace Cluster
```

Show example

```
cluster1::*> network port show -ipspace Cluster
Node: cluster1-01

Ignore
                                                  Speed(Mbps)
Health  Health
Port      IPspace      Broadcast Domain Link MTU  Admin/Oper
Status  Status
--------- ------------ ---------------- ---- ---- -----------
-------- -----
e0a       Cluster      Cluster          up   9000  auto/10000
healthy  false
e0b       Cluster      Cluster          up   9000  auto/10000
healthy  false

Node: cluster1-02


Ignore
                                                  Speed(Mbps)
Health  Health
Port      IPspace      Broadcast Domain Link MTU  Admin/Oper
Status  Status
--------- ------------ ---------------- ---- ---- -----------
-------- -----
e0a       Cluster      Cluster          up   9000  auto/10000
healthy  false
e0b       Cluster      Cluster          up   9000  auto/10000
healthy  false

Node: cluster1-03

Ignore
                                                  Speed(Mbps)
Health  Health
Port      IPspace      Broadcast Domain Link MTU  Admin/Oper
Status  Status
--------- ------------ ---------------- ---- ---- -----------
-------- -----
e0a       Cluster      Cluster          up   9000  auto/100000
healthy false
e0b       Cluster      Cluster          up   9000  auto/100000
healthy false
```

```
Node: cluster1-04

Ignore
                                                          Speed(Mbps)
Health  Health
Port      IPspace      Broadcast Domain Link MTU  Admin/Oper
Status  Status
--------- ------------ ---------------- ---- ---- -----------
-------- -----
e0a       Cluster      Cluster          up   9000  auto/100000
healthy false
e0b       Cluster      Cluster          up   9000  auto/100000
healthy false
```

b. Verify the switch health from the cluster:

```
network device-discovery show -protocol cdp
```

Show example

```
cluster1::*> network device-discovery show -protocol cdp
Node/       Local  Discovered
Protocol    Port   Device (LLDP: ChassisID)  Interface
Platform
----------- ------ ------------------------- -----------------
--------
cluster1-01/cdp
            e0a    cs1                       0/2
BES-53248
            e0b    cs2                       0/2
BES-53248
cluster01-2/cdp
            e0a    cs1                       0/1
BES-53248
            e0b    cs2                       0/1
BES-53248
cluster01-3/cdp
            e0a    cs1                       0/4
BES-53248
            e0b    cs2                       0/4
BES-53248
cluster1-04/cdp
            e0a    cs1                       0/3
BES-53248
            e0b    cs2                       0/2
BES-53248
```

20. Verify that the cluster displays information for both cluster switches.

ONTAP 9.8 and later

Beginning with ONTAP 9.8, use the command:

```
system switch ethernet show -is-monitoring-enabled-operational true
```

```
cluster1::*> system switch ethernet show -is-monitoring-enabled
-operational true
Switch                      Type               Address          Model
--------------------------- ------------------ ----------------
---------------
cs1                         cluster-network    10.228.143.200   BES-
53248
           Serial Number: QTWCU22510008
            Is Monitored: true
                  Reason: None
        Software Version: 3.10.0.3
          Version Source: CDP/ISDP

cs2                         cluster-network    10.228.143.202   BES-
53248
           Serial Number: QTWCU22510009
            Is Monitored: true
                  Reason: None
        Software Version: 3.10.0.3
          Version Source: CDP/ISDP
cluster1::*>
```

ONTAP 9.7 and earlier

For ONTAP 9.7 and earlier, use the command:

```
system cluster-switch show -is-monitoring-enabled-operational true
```

```
cluster1::*> system cluster-switch show -is-monitoring-enabled
-operational true
Switch                        Type               Address          Model
----------------------------- ------------------ ----------------
---------------
cs1                           cluster-network    10.228.143.200   BES-
53248
           Serial Number: QTWCU22510008
            Is Monitored: true
                  Reason: None
        Software Version: 3.10.0.3
          Version Source: CDP/ISDP

cs2                           cluster-network    10.228.143.202   BES-
53248
           Serial Number: QTWCU22510009
            Is Monitored: true
                  Reason: None
        Software Version: 3.10.0.3
          Version Source: CDP/ISDP
cluster1::*>
```

21. On cluster switch cs1, shut down the ports connected to the cluster ports of the nodes.

    The following example uses the interface example output:

```
(cs1)> enable
(cs1)# configure
(cs1)(Config)# interface 0/1-0/16
(cs1)(Interface 0/1-0/16)# shutdown
```

22. Verify that the cluster LIFs have migrated to the ports hosted on switch cs2. This might take a few seconds.

```
network interface show -vserver Cluster
```

Show example

```
cluster1::*> network interface show -vserver Cluster
            Logical            Status     Network            Current
Current  Is
Vserver     Interface          Admin/Oper Address/Mask       Node
Port     Home
----------- ------------------ ---------- ------------------
------------------ -------- ----
Cluster
            cluster1-01_clus1  up/up      169.254.3.4/23
cluster1-01        e0a      false
            cluster1-01_clus2  up/up      169.254.3.5/23
cluster1-01        e0b      true
            cluster1-02_clus1  up/up      169.254.3.8/23
cluster1-02        e0a      false
            cluster1-02_clus2  up/up      169.254.3.9/23
cluster1-02        e0b      true
            cluster1-03_clus1  up/up      169.254.1.3/23
cluster1-03        e0a      false
            cluster1-03_clus2  up/up      169.254.1.1/23
cluster1-03        e0b      true
            cluster1-04_clus1  up/up      169.254.1.6/23
cluster1-04        e0a      false
            cluster1-04_clus2  up/up      169.254.1.7/23
cluster1-04        e0b      true
cluster1::*>
```

23. Verify that the cluster is healthy:

    `cluster show`

    Show example

```
cluster1::*> cluster show
Node                 Health   Eligibility   Epsilon
-------------------- -------- ------------- -------
cluster1-01          true     true          false
cluster1-02          true     true          false
cluster1-03          true     true          true
cluster1-04          true     true          false
```

24. Repeat steps 4 to 19 on switch cs1.

25. Enable auto-revert on the cluster LIFs:

```
network interface modify -vserver Cluster -lif * -auto-revert true
```

26. Reboot switch cs1. This triggers the cluster LIFs to revert to their home ports. You can ignore the “cluster ports down” events reported on the nodes while the switch reboots.

```
(cs1)# reload
The system has unsaved changes.
Would you like to save them now? (y/n) y
Config file 'startup-config' created successfully.
Configuration Saved! System will now restart!
```

Step 3: Verify the configuration

1. On switch cs1, verify that the switch ports connected to the cluster ports are **up**:

```
show interfaces status all | exclude Detach
```

Show example

```
(cs1)# show interfaces status all | exclude Detach

                                Link    Physical    Physical
Media       Flow
Port       Name                 State   Mode        Status      Type
Control     VLAN
---------  -------------------  ------  ----------  ----------
----------  ----------  ------
.
.
.
0/16       10/25GbE Node Port   Down    Auto
Inactive    Trunk
0/17       10/25GbE Node Port   Down    Auto
Inactive    Trunk
0/18       10/25GbE Node Port   Up      25G Full    25G Full
25GBase-SR  Inactive    Trunk
0/19       10/25GbE Node Port   Up      25G Full    25G Full
25GBase-SR  Inactive    Trunk
.
.
.
0/50       40/100GbE Node Port  Down    Auto
Inactive    Trunk
0/51       40/100GbE Node Port  Down    Auto
Inactive    Trunk
0/52       40/100GbE Node Port  Down    Auto
Inactive    Trunk
0/53       40/100GbE Node Port  Down    Auto
Inactive    Trunk
0/54       40/100GbE Node Port  Down    Auto
Inactive    Trunk
0/55       Cluster   ISL Port   Up      Auto        100G Full
Copper      Inactive    Trunk
0/56       Cluster   ISL Port   Up      Auto        100G Full
Copper      Inactive    Trunk
```

2. Verify that the ISL between switches cs1 and cs2 is functional:

```
show port-channel 1/1
```

Show example

```
(cs1)# show port-channel 1/1
Local Interface................................ 1/1
Channel Name................................... Cluster-ISL
Link State..................................... Up
Admin Mode..................................... Enabled
Type........................................... Dynamic
Port-channel Min-links......................... 1
Load Balance Option............................ 7
(Enhanced hashing mode)
Mbr     Device/       Port      Port
Ports   Timeout       Speed     Active
------- ------------- --------- -------
0/55    actor/long    Auto      True
        partner/long
0/56    actor/long    Auto      True
        partner/long
```

3. Verify that the cluster LIFs have reverted to their home port:

```
network interface show -vserver Cluster
```

Show example

```
cluster1::*> network interface show -vserver Cluster
            Logical            Status     Network            Current
Current Is
Vserver     Interface          Admin/Oper Address/Mask       Node
Port    Home
----------- ------------------ ---------- ------------------
------------------- ------- ----
Cluster
            cluster1-01_clus1  up/up      169.254.3.4/23
cluster1-01         e0a     true
            cluster1-01_clus2  up/up      169.254.3.5/23
cluster1-01         e0b     true
            cluster1-02_clus1  up/up      169.254.3.8/23
cluster1-02         e0a     true
            cluster1-02_clus2  up/up      169.254.3.9/23
cluster1-02         e0b     true
            cluster1-03_clus1  up/up      169.254.1.3/23
cluster1-03         e0a     true
            cluster1-03_clus2  up/up      169.254.1.1/23
cluster1-03         e0b     true
            cluster1-04_clus1  up/up      169.254.1.6/23
cluster1-04         e0a     true
            cluster1-04_clus2  up/up      169.254.1.7/23
cluster1-04         e0b     true
```

4. Verify that the cluster is healthy:

   `cluster show`

   Show example

```
cluster1::*> cluster show
Node                 Health  Eligibility   Epsilon
-------------------- ------- ------------- -------
cluster1-01          true    true          false
cluster1-02          true    true          false
cluster1-03          true    true          true
cluster1-04          true    true          false
```

5. Verify the connectivity of the remote cluster interfaces:

ONTAP 9.9.1 and later

You can use the `network interface check cluster-connectivity` command to start an accessibility check for cluster connectivity and then display the details:

`network interface check cluster-connectivity start` and `network interface check cluster-connectivity show`

```
cluster1::*> network interface check cluster-connectivity start
```

NOTE: Wait for a number of seconds before running the `show` command to display the details.

```
cluster1::*> network interface check cluster-connectivity show
                                  Source              Destination
Packet
Node   Date                       LIF                 LIF
Loss
------ -------------------------- -------------------
------------------- -------
cluster1-01
       3/5/2022 19:21:18 -06:00   cluster1-01_clus2   cluster01-
02_clus1  none
       3/5/2022 19:21:20 -06:00   cluster1-01_clus2   cluster01-
02_clus2  none

cluster1-02
       3/5/2022 19:21:18 -06:00   cluster1-02_clus2   cluster1-02_clus1
none
       3/5/2022 19:21:20 -06:00   cluster1-02_clus2   cluster1-02_clus2
none
```

All ONTAP releases

For all ONTAP releases, you can also use the `cluster ping-cluster -node <name>` command to check the connectivity:

```
cluster ping-cluster -node <name>
```

```
cluster1::*> cluster ping-cluster -node local
Host is cluster1-03
Getting addresses from network interface table...
Cluster cluster1-03_clus1 169.254.1.3 cluster1-03 e0a
Cluster cluster1-03_clus2 169.254.1.1 cluster1-03 e0b
Cluster cluster1-04_clus1 169.254.1.6 cluster1-04 e0a
Cluster cluster1-04_clus2 169.254.1.7 cluster1-04 e0b
Cluster cluster1-01_clus1 169.254.3.4 cluster1-01 e0a
Cluster cluster1-01_clus2 169.254.3.5 cluster1-01 e0b
Cluster cluster1-02_clus1 169.254.3.8 cluster1-02 e0a
Cluster cluster1-02_clus2 169.254.3.9 cluster1-02 e0b
Local = 169.254.1.3 169.254.1.1
Remote = 169.254.1.6 169.254.1.7 169.254.3.4 169.254.3.5 169.254.3.8
169.254.3.9
Cluster Vserver Id = 4294967293
Ping status:
............
Basic connectivity succeeds on 12 path(s)
Basic connectivity fails on 0 path(s)
................................................
Detected 9000 byte MTU on 12 path(s):
  Local 169.254.1.3 to Remote 169.254.1.6
  Local 169.254.1.3 to Remote 169.254.1.7
  Local 169.254.1.3 to Remote 169.254.3.4
  Local 169.254.1.3 to Remote 169.254.3.5
  Local 169.254.1.3 to Remote 169.254.3.8
  Local 169.254.1.3 to Remote 169.254.3.9
  Local 169.254.1.1 to Remote 169.254.1.6
  Local 169.254.1.1 to Remote 169.254.1.7
  Local 169.254.1.1 to Remote 169.254.3.4
  Local 169.254.1.1 to Remote 169.254.3.5
  Local 169.254.1.1 to Remote 169.254.3.8
  Local 169.254.1.1 to Remote 169.254.3.9
Larger than PMTU communication succeeds on 12 path(s)
RPC status:
6 paths up, 0 paths down (tcp check)
6 paths up, 0 paths down (udp check)
```

6. Change the privilege level back to admin:

```
set -privilege admin
```

7. If you suppressed automatic case creation, re-enable it by invoking an AutoSupport message:

```
system node autosupport invoke -node * -type all -message MAINT=END
```

What's next?

After you've installed the RCF and license file, you can enable SSH.

Install licenses for BES-53248 cluster switches

The BES-53248 cluster switch base model is licensed for 16 10GbE or 25GbE ports and two 100GbE ports. You can add new ports by purchasing more licenses.

For EFOS 3.12 and later, follow the installation steps in Install the Reference Configuration File (RCF) and license file.

Review available licenses

The following licenses are available for use on the BES-53248 cluster switch:

License type	License details	Supported firmware version
SW-BES-53248A2-8P-2P	Broadcom 8PT-10G25G + 2PT-40G100G License Key, X190005/R	EFOS 3.4.4.6 and later
SW-BES-53248A2-8P-1025G	Broadcom 8 Port 10G25G License Key, X190005/R	EFOS 3.4.4.6 and later
SW-BES53248A2-6P-40-100G	Broadcom 6 Port 40G100G License Key, X190005/R	EFOS 3.4.4.6 and later

To redeem a transaction key for a port license key file, go to the License Portal for Broadcom Supported Ethernet Switches page. See the Knowledge Base article How to add Additional Port Licensing for the Broadcom BES-53248 Switch for further details.

Legacy licenses

The following table lists the legacy licenses that were available for use on the BES-53248 cluster switch:

License type	License details	Supported firmware version
SW-BES-53248A1-G1-8P-LIC	Broadcom 8P 10-25,2P40-100 License Key, X190005/R	EFOS 3.4.3.3 and later
SW-BES-53248A1-G1-16P-LIC	Broadcom 16P 10-25,4P40-100 License Key, X190005/R	EFOS 3.4.3.3 and later

License type	License details	Supported firmware version
SW-BES-53248A1-G1-24P-LIC	Broadcom 24P 10-25,6P40-100 License Key, X190005/R	EFOS 3.4.3.3 and later
SW-BES54248-40-100G-LIC	Broadcom 6Port 40G100G License Key, X190005/R	EFOS 3.4.4.6 and later
SW-BES53248-8P-10G25G-LIC	Broadcom 8Port 10G25G License Key, X190005/R	EFOS 3.4.4.6 and later
SW-BES53248-16P-1025G-LIC	Broadcom 16Port 10G25G License Key, X190005/R	EFOS 3.4.4.6 and later
SW-BES53248-24P-1025G-LIC	Broadcom 24Port 10G25G License Key, X190005/R	EFOS 3.4.4.6 and later

A license is not required for the base configuration.

Install license files

Follow these steps to install licenses for BES-53248 cluster switches.

Steps

1. Connect the cluster switch to the management network.
2. Use the `ping` command to verify connectivity to the server hosting EFOS, licenses, and the RCF file.

   Show example

   This example verifies that the switch is connected to the server at IP address 172.19.2.1:

   ```
   (cs2)# ping 172.19.2.1
   Pinging 172.19.2.1 with 0 bytes of data:

   Reply From 172.19.2.1: icmp_seq = 0. time= 5910 usec.
   ```

3. Check the current license usage on switch cs2:

   ```
   show license
   ```

Show example

```
(cs2)# show license
Reboot needed.................................. No
Number of active licenses..................... 0

License Index  License Type     Status
-------------- ---------------- -----------

No license file found.
```

4. Install the license file.

   Repeat this step to load more licenses and to use different key index numbers.

   Show example

   The following example uses SFTP to copy a license file to a key index 1.

```
(cs2)# copy sftp://root@172.19.2.1/var/lib/tftpboot/license.dat
nvram:license-key 1
Remote Password:**

Mode........................................... SFTP
Set Server IP.................................. 172.19.2.1
Path........................................... /var/lib/tftpboot/
Filename....................................... license.dat
Data Type...................................... license

Management access will be blocked for the duration of the transfer
Are you sure you want to start? (y/n) y

File transfer in progress. Management access will be blocked for the
duration of the transfer. Please wait...


License Key transfer operation completed successfully. System reboot
is required.
```

5. Display all current license information and note the license status before switch cs2 is rebooted:

   `show license`

Show example

```
(cs2)# show license

Reboot needed.................................. Yes
Number of active licenses...................... 0


License Index  License Type      Status
-------------- ----------------- --------------------------------
1              Port              License valid but not applied
```

6. Display all licensed ports:

   `show port all | exclude Detach`

   The ports from the additional license files are not displayed until after the switch is rebooted.

Show example

```
(cs2)# show port all | exclude Detach

                Admin     Physical   Physical   Link   Link    LACP
Actor
Intf      Type  Mode      Mode       Status     Status Trap    Mode
Timeout
--------- ------ --------- ---------- ---------- ------ -------
------ --------
0/1             Disable   Auto                  Down   Enable
Enable long
0/2             Disable   Auto                  Down   Enable
Enable long
0/3             Disable   Auto                  Down   Enable
Enable long
0/4             Disable   Auto                  Down   Enable
Enable long
0/5             Disable   Auto                  Down   Enable
Enable long
0/6             Disable   Auto                  Down   Enable
Enable long
0/7             Disable   Auto                  Down   Enable
Enable long
0/8             Disable   Auto                  Down   Enable
Enable long
0/9             Disable   Auto                  Down   Enable
Enable long
0/10            Disable   Auto                  Down   Enable
Enable long
0/11            Disable   Auto                  Down   Enable
Enable long
0/12            Disable   Auto                  Down   Enable
Enable long
0/13            Disable   Auto                  Down   Enable
Enable long
0/14            Disable   Auto                  Down   Enable
Enable long
0/15            Disable   Auto                  Down   Enable
Enable long
0/16            Disable   Auto                  Down   Enable
Enable long
0/55            Disable   Auto                  Down   Enable
Enable long
0/56            Disable   Auto                  Down   Enable
Enable long
```

7. Reboot the switch:

   `reload`

   Show example

   ```
   (cs2)# reload

   The system has unsaved changes.
   Would you like to save them now? (y/n) y

   Config file 'startup-config' created successfully .

   Configuration Saved!
   Are you sure you would like to reset the system? (y/n) y
   ```

8. Check that the new license is active and note that the license has been applied:

   `show license`

   Show example

   ```
   (cs2)# show license

   Reboot needed.................................. No
   Number of installed licenses................... 1
   Total Downlink Ports enabled................... 16
   Total Uplink Ports enabled..................... 8

   License Index  License Type              Status
   -------------- ------------------------
   ----------------------------------
   1              Port                      License applied
   ```

9. Check that all new ports are available:

   `show port all | exclude Detach`

Show example

```
(cs2)# show port all | exclude Detach

                Admin     Physical   Physical   Link   Link    LACP
Actor
Intf      Type  Mode      Mode       Status     Status Trap    Mode
Timeout
--------- ------ --------- ---------- ---------- ------ -------
------ --------
0/1             Disable    Auto                  Down   Enable
Enable long
0/2             Disable    Auto                  Down   Enable
Enable long
0/3             Disable    Auto                  Down   Enable
Enable long
0/4             Disable    Auto                  Down   Enable
Enable long
0/5             Disable    Auto                  Down   Enable
Enable long
0/6             Disable    Auto                  Down   Enable
Enable long
0/7             Disable    Auto                  Down   Enable
Enable long
0/8             Disable    Auto                  Down   Enable
Enable long
0/9             Disable    Auto                  Down   Enable
Enable long
0/10            Disable    Auto                  Down   Enable
Enable long
0/11            Disable    Auto                  Down   Enable
Enable long
0/12            Disable    Auto                  Down   Enable
Enable long
0/13            Disable    Auto                  Down   Enable
Enable long
0/14            Disable    Auto                  Down   Enable
Enable long
0/15            Disable    Auto                  Down   Enable
Enable long
0/16            Disable    Auto                  Down   Enable
Enable long
0/49            Disable   100G Full              Down   Enable
Enable long
0/50            Disable   100G Full              Down   Enable
Enable long
```

```
0/51              Disable   100G Full              Down   Enable
Enable long
0/52              Disable   100G Full              Down   Enable
Enable long
0/53              Disable   100G Full              Down   Enable
Enable long
0/54              Disable   100G Full              Down   Enable
Enable long
0/55              Disable   100G Full              Down   Enable
Enable long
0/56              Disable   100G Full              Down   Enable
Enable long
```

When installing additional licenses, you must configure the new interfaces manually. Do not re-apply an RCF to an existing working production switch.

Troubleshoot install issues

Where problems arise when installing a license, run the following debug commands before running the `copy` command again.

Debug commands to use: `debug transfer` and `debug license`

Show example

```
(cs2)# debug transfer
Debug transfer output is enabled.
(cs2)# debug license
Enabled capability licensing debugging.
```

When you run the `copy` command with the `debug transfer` and `debug license` options enabled, the log output is returned.

Show example

```
transfer.c(3083):Transfer process  key or certificate file type = 43
transfer.c(3229):Transfer process  key/certificate cmd = cp
/mnt/download//license.dat.1 /mnt/fastpath/ >/dev/null 2>&1CAPABILITY
LICENSING :
Fri Sep 11 13:41:32 2020: License file with index 1 added.
CAPABILITY LICENSING : Fri Sep 11 13:41:32 2020: Validating hash value
29de5e9a8af3e510f1f16764a13e8273922d3537d3f13c9c3d445c72a180a2e6.
CAPABILITY LICENSING : Fri Sep 11 13:41:32 2020: Parsing JSON buffer {
  "license": {
    "header": {
      "version": "1.0",
      "license-key": "964B-2D37-4E52-BA14",
      "serial-number": "QTFCU38290012",
      "model": "BES-53248"
  },
  "description": "",
  "ports": "0+6"
  }
}.
CAPABILITY LICENSING : Fri Sep 11 13:41:32 2020: License data does not
contain 'features' field.
CAPABILITY LICENSING : Fri Sep 11 13:41:32 2020: Serial number
QTFCU38290012 matched.
CAPABILITY LICENSING : Fri Sep 11 13:41:32 2020: Model BES-53248
matched.
CAPABILITY LICENSING : Fri Sep 11 13:41:32 2020: Feature not found in
license file with index = 1.
CAPABILITY LICENSING : Fri Sep 11 13:41:32 2020: Applying license file
1.
```

Check for the following in the debug output:

- Check that the Serial number matches: `Serial number QTFCU38290012 matched.`
- Check that the switch Model matches: `Model BES-53248 matched.`
- Check that the specified license index was not used previously. Where a license index is already used, the following error is returned: `License file /mnt/download//license.dat.1 already exists.`
- A port license is not a feature license. Therefore, the following statement is expected: `Feature not found in license file with index = 1.`

Use the `copy` command to back up port licenses to the server:

```
(cs2)# copy nvram:license-key 1
scp://<UserName>@<IP_address>/saved_license_1.dat
```

If you need to downgrade the switch software from version 3.4.4.6, the licenses are removed. This is expected behavior.

You must install an appropriate older license before reverting to an older version of the software.

Activate newly licensed ports

To activate newly licensed ports, you need to edit the latest version of the RCF and uncomment the applicable port details.

The default license activates ports 0/1 to 0/16 and 0/55 to 0/56 while the newly licensed ports will be between ports 0/17 to 0/54 depending on the type and number of licenses available. For example, to activate the SW-BES54248-40-100G-LIC license, you must uncomment the following section in the RCF:

Show example

```
.
.
!
! 2-port or 6-port 40/100GbE node port license block
!
interface 0/49
no shutdown
description "40/100GbE Node Port"
!speed 100G full-duplex
speed 40G full-duplex
service-policy in WRED_100G
spanning-tree edgeport
mtu 9216
switchport mode trunk
datacenter-bridging
priority-flow-control mode on
priority-flow-control priority 5 no-drop
exit
exit
!
interface 0/50
no shutdown
description "40/100GbE Node Port"
!speed 100G full-duplex
speed 40G full-duplex
service-policy in WRED_100G
spanning-tree edgeport
mtu 9216
switchport mode trunk
datacenter-bridging
priority-flow-control mode on
priority-flow-control priority 5 no-drop
exit
exit
!
interface 0/51
no shutdown
description "40/100GbE Node Port"
speed 100G full-duplex
!speed 40G full-duplex
service-policy in WRED_100G
spanning-tree edgeport
mtu 9216
switchport mode trunk
```

```
datacenter-bridging
priority-flow-control mode on
priority-flow-control priority 5 no-drop
exit
exit
!
interface 0/52
no shutdown
description "40/100GbE Node Port"
speed 100G full-duplex
!speed 40G full-duplex
service-policy in WRED_100G
spanning-tree edgeport
mtu 9216
switchport mode trunk
datacenter-bridging
priority-flow-control mode on
priority-flow-control priority 5 no-drop
exit
exit
!
interface 0/53
no shutdown
description "40/100GbE Node Port"
speed 100G full-duplex
!speed 40G full-duplex
service-policy in WRED_100G
spanning-tree edgeport
mtu 9216
switchport mode trunk
datacenter-bridging
priority-flow-control mode on
priority-flow-control priority 5 no-drop
exit
exit
!
interface 0/54
no shutdown
description "40/100GbE Node Port"
speed 100G full-duplex
!speed 40G full-duplex
service-policy in WRED_100G
spanning-tree edgeport
mtu 9216
switchport mode trunk
datacenter-bridging
```

```
priority-flow-control mode on
priority-flow-control priority 5 no-drop
exit
exit
!
.
.
```

For high-speed ports between 0/49 to 0/54 inclusive, uncomment each port but only uncomment one **speed** line in the RCF for each of these ports, either: **speed 100G full-duplex** or **speed 40G full-duplex** as shown in the example.
For low-speed ports between 0/17 to 0/48 inclusive, uncomment the entire 8-port section when an appropriate license has been activated.

What's next?

After you've installed the licenses, you can install the Reference Configuration File (RCF) or upgrade the RCF.

Install the Reference Configuration File (RCF)

You can install the Reference Configuration File (RCF) after configuring the BES-53248 cluster switch and after applying the new licenses.

For EFOS 3.12 and later, follow the installation steps in Install the Reference Configuration File (RCF) and license file.

Review requirements

Before you begin

Verify that the following are in place:

- A current backup of the switch configuration.
- A fully functioning cluster (no errors in the logs or similar issues).
- The current RCF file, available from the Broadcom Cluster Switches page.
- A boot configuration in the RCF that reflects the desired boot images, required if you are installing only EFOS and keeping your current RCF version. If you need to change the boot configuration to reflect the current boot images, you must do so before reapplying the RCF so that the correct version is instantiated on future reboots.
- A console connection to the switch, required when installing the RCF from a factory-default state. This requirement is optional if you have used the Knowledge Base article How to clear configuration on a Broadcom interconnect switch while retaining remote connectivity to clear the configuration, beforehand.

Suggested documentation

Consult the switch compatibility table for the supported ONTAP and RCF versions. See the EFOS Software download page. Note that there can be command dependencies between the command syntax in the RCF and that found in versions of EFOS.

Install the configuration file

About the examples

The examples in this procedure use the following switch and node nomenclature:

- The names of the two BES-53248 switches are cs1 and cs2.
- The node names are cluster1-01, cluster1-02, cluster1-03, and cluster1-04.
- The cluster LIF names are cluster1-01_clus1, cluster1-01_clus2, cluster1-02_clus1, cluster1-02_clus2, cluster1-03_clus1, cluster1-03_clus2, cluster1-04_clus1, and cluster1-04_clus2.
- The `cluster1::*>` prompt indicates the name of the cluster.
- The examples in this procedure use four nodes. These nodes use two 10GbE cluster interconnect ports `e0a` and `e0b`. See the Hardware Universe to verify the correct cluster ports on your platforms.

The command outputs might vary depending on different releases of ONTAP.

About this task

The procedure requires the use of both ONTAP commands and Broadcom switch commands; ONTAP commands are used unless otherwise indicated.

No operational inter-switch link (ISL) is needed during this procedure. This is by design because RCF version changes can affect ISL connectivity temporarily. To ensure non-disruptive cluster operations, the following procedure migrates all the cluster LIFs to the operational partner switch while performing the steps on the target switch.

Before installing a new switch software version and RCFs, use the Knowledge Base article How to clear configuration on a Broadcom interconnect switch while retaining remote connectivity. If you must erase the switch settings completely, then you need to perform the basic configuration again. You must be connected to the switch using the serial console because a complete configuration erasure resets the configuration of the management network.

Step 1: Prepare for the installation

1. If AutoSupport is enabled on this cluster, suppress automatic case creation by invoking an AutoSupport message:

```
system node autosupport invoke -node * -type all -message MAINT=xh
```

where *x* is the duration of the maintenance window in hours.

The AutoSupport message notifies technical support of this maintenance task so that automatic case creation is suppressed during the maintenance window.

The following command suppresses automatic case creation for two hours:

```
cluster1::*> system node autosupport invoke -node \* -type all -message
MAINT=2h
```

2. Change the privilege level to advanced, entering **y** when prompted to continue:

```
set -privilege advanced
```

The advanced prompt (*>) appears.

3. Display the cluster ports on each node that are connected to the cluster switches:

```
network device-discovery show
```

Show example

```
cluster1::*> network device-discovery show
Node/       Local  Discovered
Protocol    Port   Device (LLDP: ChassisID)  Interface
Platform
----------- ------ ------------------------- ----------------
--------
cluster1-01/cdp
            e0a    cs1                       0/2               BES-
53248
            e0b    cs2                       0/2               BES-
53248
cluster1-02/cdp
            e0a    cs1                       0/1               BES-
53248
            e0b    cs2                       0/1               BES-
53248
cluster1-03/cdp
            e0a    cs1                       0/4               BES-
53248
            e0b    cs2                       0/4               BES-
53248
cluster1-04/cdp
            e0a    cs1                       0/3               BES-
53248
            e0b    cs2                       0/3               BES-
53248
cluster1::*>
```

4. Check the administrative and operational status of each cluster port.
   a. Verify that all the cluster ports are up with a healthy status:

```
network port show -ipspace Cluster
```

Show example

```
cluster1::*> network port show -ipspace Cluster

Node: cluster1-01

Ignore
                                                  Speed(Mbps)
Health   Health
Port      IPspace      Broadcast Domain Link MTU  Admin/Oper
Status   Status
--------- ------------ ---------------- ---- ---- -----------
-------- ------
e0a       Cluster      Cluster          up   9000  auto/100000
healthy false
e0b       Cluster      Cluster          up   9000  auto/100000
healthy false

Node: cluster1-02

Ignore
                                                  Speed(Mbps)
Health   Health
Port      IPspace      Broadcast Domain Link MTU  Admin/Oper
Status   Status
--------- ------------ ---------------- ---- ---- -----------
-------- ------
e0a       Cluster      Cluster          up   9000  auto/100000
healthy false
e0b       Cluster      Cluster          up   9000  auto/100000
healthy false
8 entries were displayed.

Node: cluster1-03

   Ignore
                                                  Speed(Mbps)
Health   Health
Port      IPspace      Broadcast Domain Link MTU  Admin/Oper
Status   Status
--------- ------------ ---------------- ---- ---- -----------
-------- ------
e0a       Cluster      Cluster          up   9000  auto/10000
healthy  false
e0b       Cluster      Cluster          up   9000  auto/10000
healthy  false
```

```
Node: cluster1-04

Ignore
                                                          Speed(Mbps)
Health   Health
Port      IPspace      Broadcast Domain Link MTU  Admin/Oper
Status   Status
--------- ------------ ---------------- ---- ---- -----------
-------- ------
e0a       Cluster      Cluster          up   9000  auto/10000
healthy  false
e0b       Cluster      Cluster          up   9000  auto/10000
healthy  false
cluster1::*>
```

b. Verify that all the cluster interfaces (LIFs) are on the home port:

```
network interface show -vserver Cluster
```

Show example

```
cluster1::*> network interface show -vserver Cluster
            Logical            Status     Network
Current      Current Is
Vserver     Interface          Admin/Oper Address/Mask      Node
Port    Home
----------- ------------------ ---------- -----------------
------------ ------- ----
Cluster
            cluster1-01_clus1  up/up     169.254.3.4/23
cluster1-01  e0a     true
            cluster1-01_clus2  up/up     169.254.3.5/23
cluster1-01  e0b     true
            cluster1-02_clus1  up/up     169.254.3.8/23
cluster1-02  e0a     true
            cluster1-02_clus2  up/up     169.254.3.9/23
cluster1-02  e0b     true
            cluster1-03_clus1  up/up     169.254.1.3/23
cluster1-03  e0a     true
            cluster1-03_clus2  up/up     169.254.1.1/23
cluster1-03  e0b     true
            cluster1-04_clus1  up/up     169.254.1.6/23
cluster1-04  e0a     true
            cluster1-04_clus2  up/up     169.254.1.7/23
cluster1-04  e0b     true
```

5. Verify that the cluster displays information for both cluster switches.

ONTAP 9.8 and later

Beginning with ONTAP 9.8, use the command:

```
system switch ethernet show -is-monitoring-enabled-operational true
```

```
cluster1::*> system switch ethernet show -is-monitoring-enabled
-operational true
Switch                      Type               Address          Model
--------------------------- ------------------ ----------------
---------------
cs1                         cluster-network    10.228.143.200   BES-
53248
           Serial Number: QTWCU22510008
            Is Monitored: true
                  Reason: None
        Software Version: 3.10.0.3
          Version Source: CDP/ISDP

cs2                         cluster-network    10.228.143.202   BES-
53248
           Serial Number: QTWCU22510009
            Is Monitored: true
                  Reason: None
        Software Version: 3.10.0.3
          Version Source: CDP/ISDP
cluster1::*>
```

ONTAP 9.7 and earlier

For ONTAP 9.7 and earlier, use the command:

```
system cluster-switch show -is-monitoring-enabled-operational true
```

```
cluster1::*> system cluster-switch show -is-monitoring-enabled
-operational true
Switch                      Type               Address          Model
--------------------------- ------------------ ---------------
---------------
cs1                         cluster-network    10.228.143.200   BES-
53248
           Serial Number: QTWCU22510008
            Is Monitored: true
                  Reason: None
        Software Version: 3.10.0.3
          Version Source: CDP/ISDP

cs2                         cluster-network    10.228.143.202   BES-
53248
           Serial Number: QTWCU22510009
            Is Monitored: true
                  Reason: None
        Software Version: 3.10.0.3
          Version Source: CDP/ISDP
cluster1::*>
```

6. Disable auto-revert on the cluster LIFs.

```
network interface modify -vserver Cluster -lif * -auto-revert false
```

Step 2: Configure ports

1. On switch cs2, confirm the list of ports that are connected to the nodes in the cluster.

```
show isdp neighbor
```

2. On cluster switch cs2, shut down the ports connected to the cluster ports of the nodes. For example, if ports 0/1 to 0/16 are connected to ONTAP nodes:

```
(cs2)> enable
(cs2)# configure
(cs2)(Config)# interface 0/1-0/16
(cs2)(Interface 0/1-0/16)# shutdown
(cs2)(Interface 0/1-0/16)# exit
(cs2)(Config)#
```

3. Verify that the cluster LIFs have migrated to the ports hosted on cluster switch cs1. This might take a few seconds.

```
network interface show -vserver Cluster
```

Show example

```
cluster1::*> network interface show -vserver Cluster
            Logical           Status     Network            Current
Current Is
Vserver     Interface         Admin/Oper Address/Mask       Node
Port    Home
----------- ----------------- ---------- ------------------
------------ ------- ----
Cluster
            cluster1-01_clus1 up/up      169.254.3.4/23
cluster1-01   e0a     true
            cluster1-01_clus2 up/up      169.254.3.5/23
cluster1-01   e0a     false
            cluster1-02_clus1 up/up      169.254.3.8/23
cluster1-02   e0a     true
            cluster1-02_clus2 up/up      169.254.3.9/23
cluster1-02   e0a     false
            cluster1-03_clus1 up/up      169.254.1.3/23
cluster1-03   e0a     true
            cluster1-03_clus2 up/up      169.254.1.1/23
cluster1-03   e0a     false
            cluster1-04_clus1 up/up      169.254.1.6/23
cluster1-04   e0a     true
            cluster1-04_clus2 up/up      169.254.1.7/23
cluster1-04   e0a     false
cluster1::*>
```

4. Verify that the cluster is healthy:

```
cluster show
```

Show example

```
cluster1::*> cluster show
Node                  Health  Eligibility   Epsilon
--------------------- ------- ------------  -------
cluster1-01           true    true          false
cluster1-02           true    true          false
cluster1-03           true    true          true
cluster1-04           true    true          false
```

5. If you have not already done so, save the current switch configuration by copying the output of the following command to a log file:

```
show running-config
```

6. Clean the configuration on switch cs2 and perform a basic setup.

> When updating or applying a new RCF, you must erase the switch settings and perform basic configuration. You must be connected to the switch using the serial console to erase switch settings. This requirement is optional if you have used the Knowledge Base article How to clear the configuration on a Broadcom interconnect switch while retaining remote connectivity to clear the configuration, beforehand.

> Clearing the configuration does not delete licenses.

a. SSH into the switch.

   Only proceed when all the cluster LIFs have been removed from the ports on the switch and the switch is prepared to have the configuration cleared.

b. Enter privilege mode:

```
(cs2)> enable
(cs2)#
```

c. Copy and paste the following commands to remove the previous RCF configuration (depending on the previous RCF version used, some commands might generate an error if a particular setting is not present):

```
clear config interface 0/1-0/56
y
clear config interface lag 1
y
configure
deleteport 1/1 all
no policy-map CLUSTER
no policy-map WRED_25G
no policy-map WRED_100G
no class-map CLUSTER
no class-map HA
no class-map RDMA
no classofservice dot1p-mapping
no random-detect queue-parms 0
no random-detect queue-parms 1
no random-detect queue-parms 2
no random-detect queue-parms 3
no random-detect queue-parms 4
no random-detect queue-parms 5
no random-detect queue-parms 6
no random-detect queue-parms 7
no cos-queue min-bandwidth
no cos-queue random-detect 0
no cos-queue random-detect 1
no cos-queue random-detect 2
no cos-queue random-detect 3
no cos-queue random-detect 4
no cos-queue random-detect 5
no cos-queue random-detect 6
no cos-queue random-detect 7
exit
vlan database
no vlan 17
no vlan 18
exit
```

d. Save the running configuration to the startup configuration:

```
(cs2)# write memory

This operation may take a few minutes.
Management interfaces will not be available during this time.

Are you sure you want to save? (y/n) y

Config file 'startup-config' created successfully.

Configuration Saved!
```

e. Perform a reboot of the switch:

```
(cs2)# reload

Are you sure you would like to reset the system? (y/n) y
```

f. Log in to the switch again using SSH to complete the RCF installation.

7. Note the following:

a. If additional port licenses have been installed on the switch, you must modify the RCF to configure the additional licensed ports. See Activate newly licensed ports for details.

b. Record any customizations that were made in the previous RCF and apply these to the new RCF. For example, setting port speeds or hard-coding FEC mode.

EFOS version 3.12.x and later

8. Copy the RCF to the bootflash of switch cs2 using one of the following transfer protocols: HTTP, HTTPS, FTP, TFTP, SFTP, or SCP.

   This example shows SFTP being used to copy an RCF to the bootflash on switch cs2:

```
(cs2)# copy tftp://172.19.2.1/BES-53248-RCF-v1.9-Cluster-HA.txt
nvram:reference-config
Remote Password:**
Mode..................................... TFTP
Set Server IP.................................. 172.19.2.1
Path..................................... /
Filename..................................... BES-53248_RCF_v1.9-
Cluster-HA.txt
Data Type.................................... Config Script
Destination Filename.......................... reference-config.scr
Management access will be blocked for the duration of the transfer
Are you sure you want to start? (y/n) y
TFTP Code transfer starting...
File transfer operation completed successfully.
```

9. Verify that the script was downloaded and saved under the file name you gave it:

   `script list`

```
(cs2)# script list

Configuration Script Name                  Size(Bytes)  Date of
Modification
---------------------------------------  -----------
--------------------
reference-config.scr                       2680         2024 05 31
21:54:22
2 configuration script(s) found.
2042 Kbytes free.
```

10. Apply the script to the switch:

    `script apply`

```
(cs2)# script apply reference-config.scr

Are you sure you want to apply the configuration script? (y/n) y

The system has unsaved changes.
Would you like to save them now? (y/n) y
Config file 'startup-config' created successfully.
Configuration Saved!

Configuration script 'reference-config.scr' applied.
```

All other EFOS versions

8. Copy the RCF to the bootflash of switch cs2 using one of the following transfer protocols: HTTP, HTTPS, FTP, TFTP, SFTP, or SCP.

   This example shows SFTP being used to copy an RCF to the bootflash on switch cs2:

```
(cs2)# copy sftp://172.19.2.1/tmp/BES-53248_RCF_v1.9-Cluster-HA.txt
nvram:script BES-53248_RCF_v1.9-Cluster-HA.scr
Remote Password:**
Mode..................................... SFTP
Set Server IP.................................. 172.19.2.1
Path..................................... //tmp/
Filename..................................... BES-53248_RCF_v1.9-
Cluster-HA.txt
Data Type..................................... Config Script
Destination Filename.......................... BES-53248_RCF_v1.9-
Cluster-HA.scr
Management access will be blocked for the duration of the transfer
Are you sure you want to start? (y/n) y
SFTP Code transfer starting...
File transfer operation completed successfully.
```

9. Verify that the script was downloaded and saved to the file name you gave it:

```
script list
```

```
(cs2)# script list

Configuration Script Name                    Size(Bytes)  Date of
Modification
-----------------------------------------  -----------
--------------------
BES-53248_RCF_v1.9-Cluster-HA.scr          2241         2020 09 30
05:41:00

1 configuration script(s) found.
```

10. Apply the script to the switch:

    `script apply`

```
(cs2)# script apply BES-53248_RCF_v1.9-Cluster-HA.scr

Are you sure you want to apply the configuration script? (y/n) y

The system has unsaved changes.
Would you like to save them now? (y/n) y
Config file 'startup-config' created successfully.
Configuration Saved!

Configuration script 'BES-53248_RCF_v1.9-Cluster-HA.scr' applied.
```

11. Examine the banner output from the `show clibanner` command. You must read and follow these instructions to verify the proper configuration and operation of the switch.

Show example

```
(cs2)# show clibanner

Banner Message configured :
=========================
BES-53248 Reference Configuration File v1.9 for Cluster/HA/RDMA

Switch   : BES-53248
Filename : BES-53248-RCF-v1.9-Cluster.txt
Date     : 10-26-2022
Version  : v1.9
Port Usage:
Ports 01 - 16: 10/25GbE Cluster Node Ports, base config
Ports 17 - 48: 10/25GbE Cluster Node Ports, with licenses
Ports 49 - 54: 40/100GbE Cluster Node Ports, with licenses, added
right to left
Ports 55 - 56: 100GbE Cluster ISL Ports, base config
NOTE:
- The 48 SFP28/SFP+ ports are organized into 4-port groups in terms
of port
speed:
Ports 1-4, 5-8, 9-12, 13-16, 17-20, 21-24, 25-28, 29-32, 33-36, 37-
40, 41-44,
45-48
The port speed should be the same (10GbE or 25GbE) across all ports
in a 4-port
group
- If additional licenses are purchased, follow the 'Additional Node
Ports
activated with Licenses' section for instructions
- If SSH is active, it will have to be re-enabled manually after
'erase
startup-config'
command has been executed and the switch rebooted
```

12. On the switch, verify that the additional licensed ports appear after the RCF is applied:

```
show port all | exclude Detach
```

Show example

```
(cs2)# show port all | exclude Detach

                Admin     Physical     Physical   Link   Link
LACP   Actor
Intf      Type  Mode      Mode         Status     Status Trap
Mode   Timeout
--------- ------ --------- ------------ ---------- ------ -------
------ --------
0/1             Enable    Auto                    Down   Enable
Enable long
0/2             Enable    Auto                    Down   Enable
Enable long
0/3             Enable    Auto                    Down   Enable
Enable long
0/4             Enable    Auto                    Down   Enable
Enable long
0/5             Enable    Auto                    Down   Enable
Enable long
0/6             Enable    Auto                    Down   Enable
Enable long
0/7             Enable    Auto                    Down   Enable
Enable long
0/8             Enable    Auto                    Down   Enable
Enable long
0/9             Enable    Auto                    Down   Enable
Enable long
0/10            Enable    Auto                    Down   Enable
Enable long
0/11            Enable    Auto                    Down   Enable
Enable long
0/12            Enable    Auto                    Down   Enable
Enable long
0/13            Enable    Auto                    Down   Enable
Enable long
0/14            Enable    Auto                    Down   Enable
Enable long
0/15            Enable    Auto                    Down   Enable
Enable long
0/16            Enable    Auto                    Down   Enable
Enable long
0/49            Enable    40G Full                Down   Enable
Enable long
0/50            Enable    40G Full                Down   Enable
Enable long
```

```
0/51            Enable    100G Full              Down   Enable
Enable long
0/52            Enable    100G Full              Down   Enable
Enable long
0/53            Enable    100G Full              Down   Enable
Enable long
0/54            Enable    100G Full              Down   Enable
Enable long
0/55            Enable    100G Full              Down   Enable
Enable long
0/56            Enable    100G Full              Down   Enable
Enable long
```

13. Verify on the switch that your changes have been made:

```
show running-config
```

```
(cs2)# show running-config
```

14. Save the running configuration so that it becomes the startup configuration when you reboot the switch:

```
write memory
```

```
(cs2)# write memory
This operation may take a few minutes.
Management interfaces will not be available during this time.

Are you sure you want to save? (y/n) y

Config file 'startup-config' created successfully.

Configuration Saved!
```

15. Reboot the switch and verify that the running configuration is correct:

```
reload
```

```
(cs2)# reload

Are you sure you would like to reset the system? (y/n) y

System will now restart!
```

16. On cluster switch cs2, bring up the ports connected to the cluster ports of the nodes. For example, if ports 0/1 to 0/16 are connected to ONTAP nodes:

```
(cs2)> enable
(cs2)# configure
(cs2)(Config)# interface 0/1-0/16
(cs2)(Interface 0/1-0/16)# no shutdown
(cs2)(Interface 0/1-0/16)# exit
(cs2)(Config)#
```

17. Verify the ports on switch cs2:

```
show interfaces status all | exclude Detach
```

Show example

```
(cs1)# show interfaces status all | exclude Detach

                                Link    Physical    Physical
Media       Flow
Port       Name                 State   Mode        Status      Type
Control     VLAN
---------  -------------------  ------  ----------  ----------
----------  ----------  ------
.
.
.
0/16       10/25GbE Node Port   Down    Auto
Inactive    Trunk
0/17       10/25GbE Node Port   Down    Auto
Inactive    Trunk
0/18       10/25GbE Node Port   Up      25G Full    25G Full
25GBase-SR  Inactive    Trunk
0/19       10/25GbE Node Port   Up      25G Full    25G Full
25GBase-SR  Inactive    Trunk
.
.
.
0/50       40/100GbE Node Port  Down    Auto
Inactive    Trunk
0/51       40/100GbE Node Port  Down    Auto
Inactive    Trunk
0/52       40/100GbE Node Port  Down    Auto
Inactive    Trunk
0/53       40/100GbE Node Port  Down    Auto
Inactive    Trunk
0/54       40/100GbE Node Port  Down    Auto
Inactive    Trunk
0/55       Cluster   ISL Port   Up      Auto        100G Full
Copper      Inactive    Trunk
0/56       Cluster   ISL Port   Up      Auto        100G Full
Copper      Inactive    Trunk
```

18. Verify the health of cluster ports on the cluster.
    a. Verify that e0b ports are up and healthy across all nodes in the cluster:

```
network port show -ipspace Cluster
```

Show example

```
cluster1::*> network port show -ipspace Cluster

Node: cluster1-01

Ignore
                                                  Speed(Mbps)
Health  Health
Port      IPspace      Broadcast Domain Link MTU  Admin/Oper
Status  Status
--------- ------------ ---------------- ---- ---- -----------
-------- -----
e0a       Cluster      Cluster          up   9000  auto/10000
healthy  false
e0b       Cluster      Cluster          up   9000  auto/10000
healthy  false

Node: cluster1-02


Ignore
                                                  Speed(Mbps)
Health  Health
Port      IPspace      Broadcast Domain Link MTU  Admin/Oper
Status  Status
--------- ------------ ---------------- ---- ---- -----------
-------- -----
e0a       Cluster      Cluster          up   9000  auto/10000
healthy  false
e0b       Cluster      Cluster          up   9000  auto/10000
healthy  false

Node: cluster1-03

Ignore
                                                  Speed(Mbps)
Health  Health
Port      IPspace      Broadcast Domain Link MTU  Admin/Oper
Status  Status
--------- ------------ ---------------- ---- ---- -----------
-------- -----
e0a       Cluster      Cluster          up   9000  auto/100000
healthy false
e0b       Cluster      Cluster          up   9000  auto/100000
healthy false
```

```
Node: cluster1-04

Ignore
                                                          Speed(Mbps)
Health  Health
Port      IPspace      Broadcast Domain Link MTU  Admin/Oper
Status  Status
--------- ------------ ---------------- ---- ---- -----------
-------- -----
e0a       Cluster      Cluster          up   9000  auto/100000
healthy false
e0b       Cluster      Cluster          up   9000  auto/100000
healthy false
```

b. Verify the switch health from the cluster:

```
network device-discovery show -protocol cdp
```

Show example

```
cluster1::*> network device-discovery show -protocol cdp
Node/       Local  Discovered
Protocol    Port   Device (LLDP: ChassisID)  Interface
Platform
----------- ------ ------------------------- -----------------
--------
cluster1-01/cdp
            e0a    cs1                       0/2
BES-53248
            e0b    cs2                       0/2
BES-53248
cluster01-2/cdp
            e0a    cs1                       0/1
BES-53248
            e0b    cs2                       0/1
BES-53248
cluster01-3/cdp
            e0a    cs1                       0/4
BES-53248
            e0b    cs2                       0/4
BES-53248
cluster1-04/cdp
            e0a    cs1                       0/3
BES-53248
            e0b    cs2                       0/2
BES-53248
```

19. Verify that the cluster displays information for both cluster switches.

ONTAP 9.8 and later

Beginning with ONTAP 9.8, use the command:

```
system switch ethernet show -is-monitoring-enabled-operational true
```

```
cluster1::*> system switch ethernet show -is-monitoring-enabled
-operational true
Switch                      Type               Address          Model
--------------------------- ------------------ ----------------
---------------
cs1                         cluster-network    10.228.143.200   BES-
53248
           Serial Number: QTWCU22510008
            Is Monitored: true
                  Reason: None
        Software Version: 3.10.0.3
          Version Source: CDP/ISDP

cs2                         cluster-network    10.228.143.202   BES-
53248
           Serial Number: QTWCU22510009
            Is Monitored: true
                  Reason: None
        Software Version: 3.10.0.3
          Version Source: CDP/ISDP
cluster1::*>
```

ONTAP 9.7 and earlier

For ONTAP 9.7 and earlier, use the command:

```
system cluster-switch show -is-monitoring-enabled-operational true
```

```
cluster1::*> system cluster-switch show -is-monitoring-enabled
-operational true
Switch                      Type               Address          Model
--------------------------- ------------------ ---------------
---------------
cs1                         cluster-network    10.228.143.200   BES-
53248
           Serial Number: QTWCU22510008
            Is Monitored: true
                  Reason: None
        Software Version: 3.10.0.3
          Version Source: CDP/ISDP

cs2                         cluster-network    10.228.143.202   BES-
53248
           Serial Number: QTWCU22510009
            Is Monitored: true
                  Reason: None
        Software Version: 3.10.0.3
          Version Source: CDP/ISDP
cluster1::*>
```

20. On cluster switch cs1, shut down the ports connected to the cluster ports of the nodes.

    The following example uses the interface example output:

```
(cs1)> enable
(cs1)# configure
(cs1)(Config)# interface 0/1-0/16
(cs1)(Interface 0/1-0/16)# shutdown
```

21. Verify that the cluster LIFs have migrated to the ports hosted on switch cs2. This might take a few seconds.

```
network interface show -vserver Cluster
```

Show example

```
cluster1::*> network interface show -vserver Cluster
            Logical             Status     Network             Current
Current  Is
Vserver     Interface           Admin/Oper Address/Mask        Node
Port     Home
----------- ------------------ ---------- ------------------
------------------ -------- ----
Cluster
            cluster1-01_clus1  up/up      169.254.3.4/23
cluster1-01        e0a      false
            cluster1-01_clus2  up/up      169.254.3.5/23
cluster1-01        e0b      true
            cluster1-02_clus1  up/up      169.254.3.8/23
cluster1-02        e0a      false
            cluster1-02_clus2  up/up      169.254.3.9/23
cluster1-02        e0b      true
            cluster1-03_clus1  up/up      169.254.1.3/23
cluster1-03        e0a      false
            cluster1-03_clus2  up/up      169.254.1.1/23
cluster1-03        e0b      true
            cluster1-04_clus1  up/up      169.254.1.6/23
cluster1-04        e0a      false
            cluster1-04_clus2  up/up      169.254.1.7/23
cluster1-04        e0b      true
cluster1::*>
```

22. Verify that the cluster is healthy:

    `cluster show`

    Show example

```
cluster1::*> cluster show
Node                 Health   Eligibility   Epsilon
-------------------- -------- ------------- -------
cluster1-01          true     true          false
cluster1-02          true     true          false
cluster1-03          true     true          true
cluster1-04          true     true          false
```

23. Repeat steps 4 to 19 on switch cs1.

24. Enable auto-revert on the cluster LIFs:

```
network interface modify -vserver Cluster -lif * -auto-revert true
```

25. Reboot switch cs1. This triggers the cluster LIFs to revert to their home ports. You can ignore the “cluster ports down” events reported on the nodes while the switch reboots.

```
(cs1)# reload
The system has unsaved changes.
Would you like to save them now? (y/n) y
Config file 'startup-config' created successfully.
Configuration Saved! System will now restart!
```

Step 3: Verify the configuration

1. On switch cs1, verify that the switch ports connected to the cluster ports are **up**:

```
show interfaces status all | exclude Detach
```

Show example

```
(cs1)# show interfaces status all | exclude Detach

                                Link    Physical    Physical
Media       Flow
Port       Name                 State   Mode        Status      Type
Control     VLAN
---------  -------------------  ------  ----------  ----------
----------  ----------  ------
.
.
.
0/16       10/25GbE Node Port   Down    Auto
Inactive    Trunk
0/17       10/25GbE Node Port   Down    Auto
Inactive    Trunk
0/18       10/25GbE Node Port   Up      25G Full    25G Full
25GBase-SR  Inactive    Trunk
0/19       10/25GbE Node Port   Up      25G Full    25G Full
25GBase-SR  Inactive    Trunk
.
.
.
0/50       40/100GbE Node Port  Down    Auto
Inactive    Trunk
0/51       40/100GbE Node Port  Down    Auto
Inactive    Trunk
0/52       40/100GbE Node Port  Down    Auto
Inactive    Trunk
0/53       40/100GbE Node Port  Down    Auto
Inactive    Trunk
0/54       40/100GbE Node Port  Down    Auto
Inactive    Trunk
0/55       Cluster   ISL Port   Up      Auto        100G Full
Copper      Inactive    Trunk
0/56       Cluster   ISL Port   Up      Auto        100G Full
Copper      Inactive    Trunk
```

2. Verify that the ISL between switches cs1 and cs2 is functional:

```
show port-channel 1/1
```

Show example

```
(cs1)# show port-channel 1/1
Local Interface................................ 1/1
Channel Name................................... Cluster-ISL
Link State..................................... Up
Admin Mode..................................... Enabled
Type........................................... Dynamic
Port-channel Min-links......................... 1
Load Balance Option............................ 7
(Enhanced hashing mode)
Mbr     Device/       Port      Port
Ports   Timeout       Speed     Active
------- ------------- --------- -------
0/55    actor/long    Auto      True
        partner/long
0/56    actor/long    Auto      True
        partner/long
```

3. Verify that the cluster LIFs have reverted to their home port:

```
network interface show -vserver Cluster
```

Show example

```
cluster1::*> network interface show -vserver Cluster
            Logical            Status     Network            Current
Current Is
Vserver     Interface          Admin/Oper Address/Mask       Node
Port    Home
----------- ------------------ ---------- ------------------
------------------- ------- ----
Cluster
            cluster1-01_clus1  up/up      169.254.3.4/23
cluster1-01         e0a     true
            cluster1-01_clus2  up/up      169.254.3.5/23
cluster1-01         e0b     true
            cluster1-02_clus1  up/up      169.254.3.8/23
cluster1-02         e0a     true
            cluster1-02_clus2  up/up      169.254.3.9/23
cluster1-02         e0b     true
            cluster1-03_clus1  up/up      169.254.1.3/23
cluster1-03         e0a     true
            cluster1-03_clus2  up/up      169.254.1.1/23
cluster1-03         e0b     true
            cluster1-04_clus1  up/up      169.254.1.6/23
cluster1-04         e0a     true
            cluster1-04_clus2  up/up      169.254.1.7/23
cluster1-04         e0b     true
```

4. Verify that the cluster is healthy:

   `cluster show`

   Show example

```
cluster1::*> cluster show
Node                 Health  Eligibility   Epsilon
-------------------- ------- ------------- -------
cluster1-01          true    true          false
cluster1-02          true    true          false
cluster1-03          true    true          true
cluster1-04          true    true          false
```

5. Verify the connectivity of the remote cluster interfaces:

ONTAP 9.9.1 and later

You can use the `network interface check cluster-connectivity` command to start an accessibility check for cluster connectivity and then display the details:

`network interface check cluster-connectivity start` and `network interface check cluster-connectivity show`

```
cluster1::*> network interface check cluster-connectivity start
```

NOTE: Wait for a number of seconds before running the `show` command to display the details.

```
cluster1::*> network interface check cluster-connectivity show
                                  Source              Destination
Packet
Node   Date                       LIF                 LIF
Loss
------ -------------------------- ------------------- -------------------
------- 
cluster1-01
       3/5/2022 19:21:18 -06:00   cluster1-01_clus2   cluster01-
02_clus1  none
       3/5/2022 19:21:20 -06:00   cluster1-01_clus2   cluster01-
02_clus2  none

cluster1-02
       3/5/2022 19:21:18 -06:00   cluster1-02_clus2   cluster1-02_clus1
none
       3/5/2022 19:21:20 -06:00   cluster1-02_clus2   cluster1-02_clus2
none
```

All ONTAP releases

For all ONTAP releases, you can also use the `cluster ping-cluster -node <name>` command to check the connectivity:

```
cluster ping-cluster -node <name>
```

```
cluster1::*> cluster ping-cluster -node local
Host is cluster1-03
Getting addresses from network interface table...
Cluster cluster1-03_clus1 169.254.1.3 cluster1-03 e0a
Cluster cluster1-03_clus2 169.254.1.1 cluster1-03 e0b
Cluster cluster1-04_clus1 169.254.1.6 cluster1-04 e0a
Cluster cluster1-04_clus2 169.254.1.7 cluster1-04 e0b
Cluster cluster1-01_clus1 169.254.3.4 cluster1-01 e0a
Cluster cluster1-01_clus2 169.254.3.5 cluster1-01 e0b
Cluster cluster1-02_clus1 169.254.3.8 cluster1-02 e0a
Cluster cluster1-02_clus2 169.254.3.9 cluster1-02 e0b
Local = 169.254.1.3 169.254.1.1
Remote = 169.254.1.6 169.254.1.7 169.254.3.4 169.254.3.5 169.254.3.8
169.254.3.9
Cluster Vserver Id = 4294967293
Ping status:
............
Basic connectivity succeeds on 12 path(s)
Basic connectivity fails on 0 path(s)
................................................
Detected 9000 byte MTU on 12 path(s):
  Local 169.254.1.3 to Remote 169.254.1.6
  Local 169.254.1.3 to Remote 169.254.1.7
  Local 169.254.1.3 to Remote 169.254.3.4
  Local 169.254.1.3 to Remote 169.254.3.5
  Local 169.254.1.3 to Remote 169.254.3.8
  Local 169.254.1.3 to Remote 169.254.3.9
  Local 169.254.1.1 to Remote 169.254.1.6
  Local 169.254.1.1 to Remote 169.254.1.7
  Local 169.254.1.1 to Remote 169.254.3.4
  Local 169.254.1.1 to Remote 169.254.3.5
  Local 169.254.1.1 to Remote 169.254.3.8
  Local 169.254.1.1 to Remote 169.254.3.9
Larger than PMTU communication succeeds on 12 path(s)
RPC status:
6 paths up, 0 paths down (tcp check)
6 paths up, 0 paths down (udp check)
```

6. Change the privilege level back to admin:

```
set -privilege admin
```

7. If you suppressed automatic case creation, re-enable it by invoking an AutoSupport message:

```
system node autosupport invoke -node * -type all -message MAINT=END
```

What's next?

After you've installed the RCF, you can enable SSH.

Enable SSH on BES-53248 cluster switches

If you are using the Ethernet Switch Health Monitor (CSHM) and log collection features, you must generate the SSH keys and then enable SSH on the cluster switches.

Steps

1. Verify that SSH is disabled:

   ```
   show ip ssh
   ```

   Show example

   ```
   (switch)# show ip ssh

   SSH Configuration

   Administrative Mode: ..........................  Disabled
   SSH Port: .....................................  22
   Protocol Level: ...............................  Version 2
   SSH Sessions Currently Active: ................  0
   Max SSH Sessions Allowed: .....................  5
   SSH Timeout (mins): ...........................  5
   Keys Present: .................................  DSA(1024) RSA(1024)
   ECDSA(521)
   Key Generation In Progress: ...................  None
   SSH Public Key Authentication Mode: ...........  Disabled
   SCP server Administrative Mode: ...............  Disabled
   ```

   - If SSH is not disabled, disable it as follows:

     ```
     no ip ssh server enable

     no ip scp server enable
     ```

     - For EFOS 3.12 and later, console access is required as active SSH sessions are lost when SSH is disabled.
     - For EFOS 3.11 and earlier, current SSH sessions are kept open after disabling the SSH server.

Make sure that you disable SSH before you modify the keys, otherwise, a warning is reported on the switch.

2. In config mode, generate the SSH keys:

   `crypto key generate`

   Show example

   ```
   (switch)# config

   (switch) (Config)# crypto key generate rsa

   Do you want to overwrite the existing RSA keys? (y/n): y


   (switch) (Config)# crypto key generate dsa

   Do you want to overwrite the existing DSA keys? (y/n): y


   (switch) (Config)# crypto key generate ecdsa 521

   Do you want to overwrite the existing ECDSA keys? (y/n): y
   ```

3. In config mode, set AAA authorization for ONTAP log collection:

   `aaa authorization commands "noCmdAuthList" none`

   Show example

   ```
   (switch) (Config)# aaa authorization commands "noCmdAuthList" none
   (switch) (Config)# exit
   ```

4. Re-enable SSH/SCP.

   Show example

   ```
   (switch)# ip ssh server enable
   (switch)# ip scp server enable
   (switch)# ip ssh pubkey-auth
   ```

5. Save these changes to the startup-config:

   ```
   write memory
   ```

   Show example

   ```
   (switch)# write memory

   This operation may take a few minutes.
   Management interfaces will not be available during this time.
   Are you sure you want to save? (y/n) y

   Config file 'startup-config' created successfully.

   Configuration Saved!
   ```

6. Encrypt the SSH keys (for **FIPS-mode only**):

   In FIPS mode, the keys are required to be encrypted with a passphrase for security. In the absence of an encrypted key, the application fails to start. The keys are created and encrypted using the following commands:

Show example

```
(switch) configure
(switch) (Config)# crypto key encrypt write rsa passphrase
<passphase>

The key will be encrypted and saved on NVRAM.
This will result in saving all existing configuration also.
Do you want to continue? (y/n): y

Config file 'startup-config' created successfully.

(switch) (Config)# crypto key encrypt write dsa passphrase
<passphase>

The key will be encrypted and saved on NVRAM.
This will result in saving all existing configuration also.
Do you want to continue? (y/n): y

Config file 'startup-config' created successfully.

(switch)(Config)# crypto key encrypt write ecdsa passphrase
<passphase>

The key will be encrypted and saved on NVRAM.
This will result in saving all existing configuration also.
Do you want to continue? (y/n): y

Config file 'startup-config' created successfully.

(switch) (Config)# end
(switch)# write memory

This operation may take a few minutes.
Management interfaces will not be available during this time.
Are you sure you want to save? (y/n) y

Config file 'startup-config' created successfully.

Configuration Saved!
```

7. Reboot the switch:

```
reload
```

8. Verify that SSH is enabled:

```
show ip ssh
```

Show example

```
(switch)# show ip ssh

SSH Configuration

Administrative Mode: ..... Enabled
SSH Port: ..... 22
Protocol Level: ..... Version 2
SSH Sessions Currently Active: ..... 0
Max SSH Sessions Allowed: ..... 5
SSH Timeout (mins): ..... 5
Keys Present: ..... DSA(1024) RSA(1024)
ECDSA(521)
Key Generation In Progress: ..... None
SSH Public Key Authentication Mode: ..... Enabled
SCP server Administrative Mode: ..... Enabled
```

What's next?

After you've enabled SSH, you can configure switch health monitoring.

Reset the BES-53248 cluster switch to factory defaults

To reset the BES-53248 cluster switch to factory defaults, you must erase the BES-53248 switch settings.

About this task

- You must be connected to the switch using the serial console.
- This task resets the configuration of the management network.

Steps

1. Change to the elevated command prompt.

```
(cs2)> enable
(cs2)#
```

2. Erase the startup configuration.

```
erase startup-config
```

```
(cs2)# erase startup-config

Are you sure you want to clear the configuration? (y/n) y
```

3. Reboot the switch.

```
(cs2)# reload
Are you sure you would like to reset the system? (y/n) y
```

If the system asks whether to save the unsaved or changed configuration before reloading the switch, select **No**.

4. Wait for the switch to reload, and then log in to the switch.

The default user is “admin”, and no password is set. A prompt similar to the following is displayed:

```
(Routing)>
```

Upgrade the switch

Upgrade workflow for BES-53248 cluster switches

Follow these steps to upgrade the EFOS software and reference configuration files (RCFs) on Broadcom BES-54328 cluster switches, as applicable.

1. **Upgrade your EFOS version**

Download and install the Ethernet Fabric OS (EFOS) software on the BES-53248 cluster switch.

2. **Upgrade your RCF version**

Upgrade the RCF on the BES-53248 cluster switch, and then verify the ports for an additional license after the RCF is applied.

3. **Verify the ONTAP cluster network after upgrade**

Verify the health of the ONTAP cluster network after an upgrade of the EFOS software or RCF for BES-53248 cluster switches.

Upgrade the EFOS software

Follow these steps to upgrade the EFOS software on the BES-53248 cluster switch.

EFOS software includes a set of advanced networking features and protocols for developing Ethernet and IP infrastructure systems. This software architecture is suitable for any network organizational device using applications that require thorough packet inspection or separation.

Prepare for upgrade

Before you begin

- Download the applicable Broadcom EFOS software for your cluster switches from the Broadcom Ethernet Switch Support site.
- Review the following notes regarding EFOS versions.

Note the following:

- When upgrading from EFOS 3.4.x.x to EFOS 3.7.x.x or later, the switch must be running EFOS 3.4.4.6 (or later 3.4.x.x release). If you are running a release prior to that, then upgrade the switch to EFOS 3.4.4.6 (or later 3.4.x.x release) first, then upgrade the switch to EFOS 3.7.x.x or later.
- The configuration for EFOS 3.4.x.x and 3.7.x.x or later are different. Changing the EFOS version from 3.4.x.x to 3.7.x.x or later, or vice versa, requires the switch to be reset to factory defaults and the RCF files for the corresponding EFOS version to be (re)applied. This procedure requires access through the serial console port.
- Beginning with EFOS version 3.7.x.x or later, a non-FIPS compliant and a FIPS compliant version is available. Different steps apply when moving from a non-FIPS compliant to a FIPS compliant version or vice versa. Changing EFOS from a non-FIPS compliant to a FIPS compliant version or vice versa will reset the switch to factory defaults. This procedure requires access through the serial console port.

Procedure	Current EFOS version	New EFOS version	High level steps

Steps to upgrade EFOS between two (non) FIPS compliant versions	3.4.x.x	3.4.x.x	Upgrade the new EFOS image using Method 1: Upgrade EFOS. The configuration and license information is retained.
	3.4.4.6 (or later 3.4.x.x)	3.7.x.x or later non-FIPS compliant	Upgrade EFOS using Method 1: Upgrade EFOS. Reset the switch to factory defaults and apply the RCF file for EFOS 3.7.x.x or later.
	3.7.x.x or later non-FIPS compliant	3.4.4.6 (or later 3.4.x.x)	Downgrade EFOS using Method 1: Upgrade EFOS. Reset the switch to factory defaults and apply the RCF file for EFOS 3.4.x.x
		3.7.x.x or later non-FIPS compliant	Upgrade the new EFOS image using Method 1: Upgrade EFOS. The configuration and license information is retained.
	3.7.x.x or later FIPS compliant	3.7.x.x or later FIPS compliant	Upgrade the new EFOS image using Method 1: Upgrade EFOS. The configuration and license information is retained.
Steps to upgrade to/from a FIPS compliant EFOS version	Non-FIPS compliant	FIPS compliant	Upgrade of the EFOS image using Method 2: Upgrade EFOS using the ONIE OS installation. The switch configuration and license information will be lost.
	FIPS compliant	Non-FIPS compliant	

To check if your version of EFOS is FIPS compliant or non-FIPS compliant, use the `show fips status` command. In the following examples, **IP_switch_a1** is using FIPS compliant EFOS and **IP_switch_a2** is using non-FIPS compliant EFOS.

- On switch IP_switch_a1 (FIPS compliant EFOS):

```
IP_switch_a1 # show fips status

System running in FIPS mode
```

- On switch IP_switch_a2 (non-FIPS compliant EFOS):

```
IP_switch_a2 # show fips status
                        ^
% Invalid input detected at ^ marker.
```

Upgrade the software

Use one of the following methods:

- Method 1: Upgrade EFOS. Use for most cases (see the table above).
- Method 2: Upgrade EFOS using the ONIE OS installation. Use if one EFOS version is FIPS compliant and the other EFOS version is non-FIPS compliant.

Upgrade EFOS on one switch at a time to ensure continued cluster network operation.

Method 1: Upgrade EFOS

Perform the following steps to upgrade the EFOS software.

Note that after upgrading BES-53248 cluster switches from EFOS 3.3.x.x or 3.4.x.x to EFOS 3.7.0.4 or 3.8.0.2, Inter-Switch Links (ISLs) and port channels are marked in the **Down** state. This is expected behavior and it's safe to continue with the upgrade unless you are having issues with auto-reverting LIFs. See the Knowledge Base article: BES-53248 Cluster Switch NDU failed upgrade to EFOS 3.7.0.4 and later for further details.

Steps

1. Connect the BES-53248 cluster switch to the management network.
2. Use the `ping` command to verify connectivity to the server hosting EFOS, licenses, and the RCF file.

   This example verifies that the switch is connected to the server at IP address 172.19.2.1:

```
(cs2)# ping 172.19.2.1
Pinging 172.19.2.1 with 0 bytes of data:

Reply From 172.19.2.1: icmp_seq = 0. time= 5910 usec.
```

3. Disable auto-revert on the cluster LIFs.

```
network interface modify -vserver Cluster -lif * -auto-revert false
```

4. Display the boot images for the active and backup configuration:

   `show bootvar`

   Show example

```
(cs2)# show bootvar

 Image Descriptions

 active :
 backup :

 Images currently available on Flash
--------------------------------------------------------------------
 unit      active      backup        current-active    next-active
--------------------------------------------------------------------
    1      3.7.0.4     3.4.4.6             3.7.0.4        3.7.0.4
```

5. Download the image file to the switch.

   Copying the image file to the backup image means that when you reboot, that image establishes the running EFOS version, completing the update.

```
(cs2)# copy sftp://root@172.19.2.1//tmp/EFOS-3.10.0.3.stk backup
Remote Password:**

Mode..................................... SFTP
Set Server IP.............................. 172.19.2.1
Path....................................... //tmp/
Filename................................... EFOS-3.10.0.3.stk
Data Type.................................. Code
Destination Filename....................... backup

Management access will be blocked for the duration of the transfer
Are you sure you want to start? (y/n) y
SFTP Code transfer starting...


File transfer operation completed successfully.
```

6. Display the boot images for the active and backup configuration:

   `show bootvar`

   Show example

```
(cs2)# show bootvar

Image Descriptions

 active :
 backup :

 Images currently available on Flash
----------------------------------------------------------------------
 unit      active      backup      current-active    next-active
----------------------------------------------------------------------
    1      3.7.0.4    3.10.0.3            3.7.0.4       3.10.0.3
```

7. Boot the system from the backup configuration:

   `boot system backup`

```
(cs2)# boot system backup
Activating image backup ..
```

8. Display the boot images for the active and backup configuration:

   `show bootvar`

   Show example

   ```
   (cs2)# show bootvar

   Image Descriptions

    active :
    backup :

    Images currently available on Flash
   ----------------------------------------------------------------------
    unit      active      backup      current-active    next-active
   ----------------------------------------------------------------------
       1    3.10.0.3    3.10.0.3            3.10.0.3       3.10.0.3
   ```

9. Save the running configuration to the startup configuration:

   `write memory`

   Show example

   ```
   (cs2)# write memory
   This operation may take a few minutes.

   Management interfaces will not be available during this time.

   Are you sure you want to save? (y/n) y

   Config file 'startup-config' created successfully.
   Configuration Saved!
   ```

10. Reboot the switch:

    `reload`

Show example

```
(cs2)# reload

The system has unsaved changes.
Would you like to save them now? (y/n) y

Config file 'startup-config' created successfully.
Configuration Saved!
System will now restart!
```

11. Log in again and verify the new version of the EFOS software:

    `show version`

Show example

```
(cs2)# show version

Switch: 1

System Description..............................  BES-53248A1,
3.10.0.3, Linux 4.4.211-28a6fe76, 2016.05.00.04
Machine Type....................................  BES-53248A1,
Machine Model...................................  BES-53248
Serial Number...................................  QTFCU38260023
Maintenance Level...............................  A
Manufacturer....................................  0xbc00
Burned In MAC Address...........................  D8:C4:97:71:0F:40
Software Version................................  3.10.0.3
Operating System................................  Linux 4.4.211-
28a6fe76
Network Processing Device.......................  BCM56873_A0
CPLD Version....................................  0xff040c03

Additional Packages.............................  BGP-4
.............................................  QOS
.............................................  Multicast
.............................................  IPv6
.............................................  Routing
.............................................  Data Center
.............................................  OpEN API
.............................................  Prototype Open API
```

12. Repeat steps 5 through to 11 on the switch cs1.
13. Enable auto-revert on the cluster LIFs.

```
network interface modify -vserver Cluster -lif * -auto-revert true
```

14. Verify that the cluster LIFs have reverted to their home port:

```
network interface show -vserver Cluster
```

For further details, see Revert a LIF to its home port.

Method 2: Upgrade EFOS using the ONIE OS installation

You can perform the following steps if one EFOS version is FIPS compliant and the other EFOS version is non-FIPS compliant. These steps can be used to upgrade the non-FIPS or FIPS compliant EFOS 3.7.x.x image from ONIE if the switch fails to boot.

ⓘ This functionality is only available for EFOS 3.7.x.x or later non-FIPS compliant.

⚠ If you upgrade EFOS using the ONIE OS installation, the configuration is reset to factory defaults and licenses are deleted. You must set up the switch and install licenses and a supported RCF to return the switch to normal operation.

Steps

1. Disable auto-revert on the cluster LIFs.

```
network interface modify -vserver Cluster -lif * -auto-revert false
```

2. Boot the switch into ONIE installation mode.

During boot, select ONIE when you see the prompt:

```
+-----------------------------------------------------------------------+
|EFOS                                                                   |
|*ONIE                                                                  |
|                                                                       |
|                                                                       |
|                                                                       |
|                                                                       |
|                                                                       |
|                                                                       |
|                                                                       |
|                                                                       |
|                                                                       |
|                                                                       |
+-----------------------------------------------------------------------+
```

After you select **ONIE**, the switch loads and presents you with several choices. Select **Install OS**.

```
+-----------------------------------------------------------------------+
|*ONIE: Install OS                                                      |
| ONIE: Rescue                                                          |
| ONIE: Uninstall OS                                                    |
| ONIE: Update ONIE                                                     |
| ONIE: Embed ONIE                                                      |
| DIAG: Diagnostic Mode                                                 |
| DIAG: Burn-In Mode                                                    |
|                                                                       |
|                                                                       |
|                                                                       |
|                                                                       |
|                                                                       |
+-----------------------------------------------------------------------+
```

The switch boots into ONIE installation mode.

3. Stop the ONIE discovery and configure the Ethernet interface.

   When the following message appears, press **Enter** to invoke the ONIE console:

```
Please press Enter to activate this console. Info: eth0:  Checking
link... up.
 ONIE:/ #
```

   The ONIE discovery continues and messages are printed to the console.

```
Stop the ONIE discovery
ONIE:/ # onie-discovery-stop
discover: installer mode detected.
Stopping: discover... done.
ONIE:/ #
```

4. Configure the Ethernet interface and add the route using `ifconfig eth0 <ipAddress> netmask <netmask> up` and `route add default gw <gatewayAddress>`

```
ONIE:/ # ifconfig eth0 10.10.10.10 netmask 255.255.255.0 up
ONIE:/ # route add default gw 10.10.10.1
```

5. Verify that the server hosting the ONIE installation file is reachable:

   `ping`

   Show example

```
ONIE:/ # ping 50.50.50.50
PING 50.50.50.50 (50.50.50.50): 56 data bytes
64 bytes from 50.50.50.50: seq=0 ttl=255 time=0.429 ms
64 bytes from 50.50.50.50: seq=1 ttl=255 time=0.595 ms
64 bytes from 50.50.50.50: seq=2 ttl=255 time=0.369 ms
^C
--- 50.50.50.50 ping statistics ---
3 packets transmitted, 3 packets received, 0% packet loss
round-trip min/avg/max = 0.369/0.464/0.595 ms
ONIE:/ #
```

6. Install the new switch software:

```
ONIE:/ # onie-nos-install http://50.50.50.50/Software/onie-installer-x86_64
```

Show example

```
ONIE:/ # onie-nos-install http://50.50.50.50/Software/onie-
installer-x86_64
discover: installer mode detected.
Stopping: discover... done.
Info: Fetching http://50.50.50.50/Software/onie-installer-3.7.0.4
...
Connecting to 50.50.50.50 (50.50.50.50:80)
installer            100% |*******************************| 48841k
0:00:00 ETA
ONIE: Executing installer: http://50.50.50.50/Software/onie-
installer-3.7.0.4
Verifying image checksum ... OK.
Preparing image archive ... OK.
```

The software installs and then reboots the switch. Let the switch reboot normally into the new EFOS version.

7. Verify that the new switch software is installed:

   `show bootvar`

   Show example

```
(cs2)# show bootvar
Image Descriptions
active :
backup :
Images currently available on Flash
----    ----------- -------- --------------- ------------
unit    active      backup   current-active  next-active
----    ----------- -------- --------------- ------------
   1    3.7.0.4     3.7.0.4  3.7.0.4         3.10.0.3
(cs2) #
```

8. Complete the installation. The switch reboots with no configuration applied and resets to factory defaults. Complete the following steps to reconfigure the switch:
   a. Install licenses
   b. Install the RCF
   c. Enable SSH
   d. Enable log collection

e. Configure SNMPv3 for monitoring

9. Repeat steps 2 through to 8 on the switch cs1.
10. Enable auto-revert on the cluster LIFs.

```
network interface modify -vserver Cluster -lif * -auto-revert true
```

11. Verify that the cluster LIFs have reverted to their home port:

```
network interface show -vserver Cluster
```

For further details, see Revert a LIF to its home port.

Upgrade the Reference Configuration File (RCF)

You can upgrade the Reference Configuration File (RCF) after upgrading the BES-53248 cluster switch EFOS and after applying any new licenses.

Before you begin

Make sure you have the following:

- A current backup of the switch configuration.
- A fully functioning cluster (no errors in the logs or similar issues).
- The current RCF file, available from the Broadcom Cluster Switches page.
- A boot configuration in the RCF that reflects the desired boot images, required if you are installing only EFOS and keeping your current RCF version. If you need to change the boot configuration to reflect the current boot images, you must do so before reapplying the RCF so that the correct version is instantiated on future reboots.
- A console connection to the switch, required when installing the RCF from a factory-default state. This requirement is optional if you have used the Knowledge Base article How to clear configuration on a Broadcom interconnect switch while retaining remote connectivity to clear the configuration, beforehand.

Suggested documentation

- Consult the switch compatibility table for the supported ONTAP and RCF versions. See the EFOS Software download page. Note that there can be command dependencies between the command syntax in the RCF and that found in versions of EFOS.
- Refer to the appropriate software and upgrade guides available on the Broadcom site for complete documentation on the BES-53248 switch upgrade and downgrade procedures.

About the examples

The examples in this procedure use the following switch and node nomenclature:

- The names of the two BES-53248 switches are cs1 and cs2.
- The node names are cluster1-01, cluster1-02, cluster1-03, and cluster1-04.
- The cluster LIF names are cluster1-01_clus1, cluster1-01_clus2, cluster1-02_clus1, cluster1-02_clus2, cluster1-03_clus1, cluster1-03_clus2, cluster1-04_clus1, and cluster1-04_clus2.

- The `cluster1::*>` prompt indicates the name of the cluster.
- The examples in this procedure use four nodes. These nodes use two 10GbE cluster interconnect ports `e0a` and `e0b`. See the Hardware Universe to verify the correct cluster ports on your platforms.

The command outputs might vary depending on different releases of ONTAP.

About this task

The procedure requires the use of both ONTAP commands and Broadcom switch commands; ONTAP commands are used unless otherwise indicated.

No operational inter-switch link (ISL) is needed during this procedure. This is by design because RCF version changes can affect ISL connectivity temporarily. To ensure non-disruptive cluster operations, the following procedure migrates all the cluster LIFs to the operational partner switch while performing the steps on the target switch.

Before installing a new switch software version and RCFs, use the Knowledge Base article How to clear configuration on a Broadcom interconnect switch while retaining remote connectivity. If you must erase the switch settings completely, then you will need to perform the basic configuration again. You must be connected to the switch using the serial console, since a complete configuration erasure resets the configuration of the management network.

Step 1: Prepare for upgrade

1. If AutoSupport is enabled on this cluster, suppress automatic case creation by invoking an AutoSupport message:

   ```
   system node autosupport invoke -node * -type all -message MAINT=xh
   ```

   where *x* is the duration of the maintenance window in hours.

   The AutoSupport message notifies technical support of this maintenance task so that automatic case creation is suppressed during the maintenance window.

   The following command suppresses automatic case creation for two hours:

   ```
   system node autosupport invoke -node * -type all -message MAINT=2h
   ```

2. Change the privilege level to advanced, entering **y** when prompted to continue:

   ```
   set -privilege advanced
   ```

   The advanced prompt (*>) appears.

3. Display the cluster ports on each node that are connected to the cluster switches:

   ```
   network device-discovery show
   ```

Show example

```
cluster1::*> network device-discovery show
Node/       Local  Discovered
Protocol    Port   Device (LLDP: ChassisID)  Interface
Platform
----------- ------ ------------------------- ----------------
--------
cluster1-01/cdp
            e0a    cs1                       0/2               BES-
53248
            e0b    cs2                       0/2               BES-
53248
cluster1-02/cdp
            e0a    cs1                       0/1               BES-
53248
            e0b    cs2                       0/1               BES-
53248
cluster1-03/cdp
            e0a    cs1                       0/4               BES-
53248
            e0b    cs2                       0/4               BES-
53248
cluster1-04/cdp
            e0a    cs1                       0/3               BES-
53248
            e0b    cs2                       0/3               BES-
53248
cluster1::*>
```

4. Check the administrative and operational status of each cluster port.
   a. Verify that all the cluster ports are up with a healthy status:

```
network port show -ipspace Cluster
```

Show example

```
cluster1::*> network port show -ipspace Cluster
Node: cluster1-01

Ignore
                                                  Speed(Mbps)
Health   Health
Port      IPspace      Broadcast Domain Link MTU  Admin/Oper
Status   Status
--------- ------------ ---------------- ---- ---- -----------
-------- ------
e0a       Cluster      Cluster          up   9000  auto/100000
healthy false
e0b       Cluster      Cluster          up   9000  auto/100000
healthy false

Node: cluster1-02

Ignore
                                                  Speed(Mbps)
Health   Health
Port      IPspace      Broadcast Domain Link MTU  Admin/Oper
Status   Status
--------- ------------ ---------------- ---- ---- -----------
-------- ------
e0a       Cluster      Cluster          up   9000  auto/100000
healthy false
e0b       Cluster      Cluster          up   9000  auto/100000
healthy false
8 entries were displayed.

Node: cluster1-03

   Ignore
                                                  Speed(Mbps)
Health   Health
Port      IPspace      Broadcast Domain Link MTU  Admin/Oper
Status   Status
--------- ------------ ---------------- ---- ---- -----------
-------- ------
e0a       Cluster      Cluster          up   9000  auto/10000
healthy  false
e0b       Cluster      Cluster          up   9000  auto/10000
healthy  false
```

```
Node: cluster1-04

Ignore
                                                          Speed(Mbps)
Health   Health
Port      IPspace      Broadcast Domain Link MTU  Admin/Oper
Status   Status
--------- ------------ ---------------- ---- ---- -----------
-------- ------
e0a       Cluster      Cluster          up   9000  auto/10000
healthy  false
e0b       Cluster      Cluster          up   9000  auto/10000
healthy  false
cluster1::*>
```

b. Verify that all the cluster interfaces (LIFs) are on the home port:

```
network interface show -vserver Cluster
```

Show example

```
cluster1::*> network interface show -vserver Cluster
            Logical            Status     Network
Current      Current Is
Vserver     Interface          Admin/Oper Address/Mask      Node
Port    Home
----------- ------------------ ---------- -----------------
------------ ------- ----
Cluster
            cluster1-01_clus1  up/up     169.254.3.4/23
cluster1-01  e0a     true
            cluster1-01_clus2  up/up     169.254.3.5/23
cluster1-01  e0b     true
            cluster1-02_clus1  up/up     169.254.3.8/23
cluster1-02  e0a     true
            cluster1-02_clus2  up/up     169.254.3.9/23
cluster1-02  e0b     true
            cluster1-03_clus1  up/up     169.254.1.3/23
cluster1-03  e0a     true
            cluster1-03_clus2  up/up     169.254.1.1/23
cluster1-03  e0b     true
            cluster1-04_clus1  up/up     169.254.1.6/23
cluster1-04  e0a     true
            cluster1-04_clus2  up/up     169.254.1.7/23
cluster1-04  e0b     true
```

5. Verify that the cluster displays information for both cluster switches.

ONTAP 9.8 and later

Beginning with ONTAP 9.8, use the command:

```
system switch ethernet show -is-monitoring-enabled-operational true
```

```
cluster1::*> system switch ethernet show -is-monitoring-enabled
-operational true
Switch                      Type               Address          Model
--------------------------- ------------------ ----------------
---------------
cs1                         cluster-network    10.228.143.200   BES-
53248
           Serial Number: QTWCU22510008
            Is Monitored: true
                  Reason: None
        Software Version: 3.10.0.3
          Version Source: CDP/ISDP

cs2                         cluster-network    10.228.143.202   BES-
53248
           Serial Number: QTWCU22510009
            Is Monitored: true
                  Reason: None
        Software Version: 3.10.0.3
          Version Source: CDP/ISDP
cluster1::*>
```

ONTAP 9.7 and earlier

For ONTAP 9.7 and earlier, use the command:

```
system cluster-switch show -is-monitoring-enabled-operational true
```

```
cluster1::*> system cluster-switch show -is-monitoring-enabled
-operational true
Switch                      Type               Address          Model
--------------------------- ------------------ ---------------
---------------
cs1                         cluster-network    10.228.143.200   BES-
53248
           Serial Number: QTWCU22510008
            Is Monitored: true
                  Reason: None
        Software Version: 3.10.0.3
          Version Source: CDP/ISDP

cs2                         cluster-network    10.228.143.202   BES-
53248
           Serial Number: QTWCU22510009
            Is Monitored: true
                  Reason: None
        Software Version: 3.10.0.3
          Version Source: CDP/ISDP
cluster1::*>
```

6. Disable auto-revert on the cluster LIFs.

```
network interface modify -vserver Cluster -lif * -auto-revert false
```

Step 2: Configure ports

1. On switch cs2, confirm the list of ports that are connected to the nodes in the cluster.

```
show isdp neighbor
```

2. On switch cs2, shut down the ports connected to the cluster ports of the nodes. For example, if ports 0/1 to 0/16 are connected to ONTAP nodes:

```
(cs2)> enable
(cs2)# configure
(cs2)(Config)# interface 0/1-0/16
(cs2)(Interface 0/1-0/16)# shutdown
(cs2)(Interface 0/1-0/16)# exit
(cs2)(Config)#
```

3. Verify that the cluster LIFs have migrated to the ports hosted on cluster switch cs1. This might take a few seconds.

```
network interface show -vserver Cluster
```

Show example

```
cluster1::*> network interface show -vserver Cluster
            Logical           Status     Network            Current
Current Is
Vserver     Interface         Admin/Oper Address/Mask       Node
Port    Home
----------- ----------------- ---------- ------------------
------------ ------- ----
Cluster
            cluster1-01_clus1 up/up      169.254.3.4/23
cluster1-01   e0a     true
            cluster1-01_clus2 up/up      169.254.3.5/23
cluster1-01   e0a     false
            cluster1-02_clus1 up/up      169.254.3.8/23
cluster1-02   e0a     true
            cluster1-02_clus2 up/up      169.254.3.9/23
cluster1-02   e0a     false
            cluster1-03_clus1 up/up      169.254.1.3/23
cluster1-03   e0a     true
            cluster1-03_clus2 up/up      169.254.1.1/23
cluster1-03   e0a     false
            cluster1-04_clus1 up/up      169.254.1.6/23
cluster1-04   e0a     true
            cluster1-04_clus2 up/up      169.254.1.7/23
cluster1-04   e0a     false
cluster1::*>
```

4. Verify that the cluster is healthy:

```
cluster show
```

Show example

```
cluster1::*> cluster show
Node                  Health  Eligibility   Epsilon
--------------------- ------- ------------  -------
cluster1-01           true    true          false
cluster1-02           true    true          false
cluster1-03           true    true          true
cluster1-04           true    true          false
```

5. If you have not already done so, save the current switch configuration by copying the output of the following command to a log file:

```
show running-config
```

6. Clean the configuration on switch cs2 and perform a basic setup.

When updating or applying a new RCF, you must erase the switch settings and perform basic configuration. You must be connected to the switch using the serial console to erase switch settings. This requirement is optional if you have used the Knowledge Base article How to clear the configuration on a Broadcom interconnect switch while retaining remote connectivity to clear the configuration, beforehand.

Clearing the configuration does not delete licenses.

a. SSH into the switch.

   Only proceed when all the cluster LIFs have been removed from the ports on the switch and the switch is prepared to have the configuration cleared.

b. Enter privilege mode:

```
(cs2)> enable
(cs2)#
```

c. Copy and paste the following commands to remove the previous RCF configuration (depending on the previous RCF version used, some commands might generate an error if a particular setting is not present):

```
clear config interface 0/1-0/56
y
clear config interface lag 1
y
configure
```

```
deleteport 1/1 all
no policy-map CLUSTER
no policy-map WRED_25G
no policy-map WRED_100G
no policy-map InShared
no policy-map InMetroCluster
no policy-map InCluster
no policy-map InClusterRdma
no class-map CLUSTER
no class-map HA
no class-map RDMA
no class-map c5
no class-map c4
no class-map CLUSTER
no class-map CLUSTER_RDMA
no class-map StorageSrc
no class-map StorageDst
no class-map RdmaSrc
no class-map RdmaDstA
no classofservice dot1p-mapping
no random-detect queue-parms 0
no random-detect queue-parms 1
no random-detect queue-parms 2
no random-detect queue-parms 3
no random-detect queue-parms 4
no random-detect queue-parms 5
no random-detect queue-parms 6
no random-detect queue-parms 7
no cos-queue min-bandwidth
no cos-queue random-detect 0
no cos-queue random-detect 1
no cos-queue random-detect 2
no cos-queue random-detect 3
no cos-queue random-detect 4
no cos-queue random-detect 5
no cos-queue random-detect 6
no cos-queue random-detect 7
exit
vlan database
no vlan 17
no vlan 18
exit
show running-config
```

d. Save the running configuration to the startup configuration:

write memory

```
(cs2)# write memory

This operation may take a few minutes.
Management interfaces will not be available during this time.

Are you sure you want to save? (y/n) y

Config file 'startup-config' created successfully.
Configuration Saved!
```

e. Perform a reboot of the switch:

reload

```
(cs2)# reload
Are you sure you would like to reset the system? (y/n) y
```

f. Log in to the switch again using SSH to complete the RCF installation.

7. Note the following:

a. If additional port licenses have been installed on the switch, you must modify the RCF to configure the additional licensed ports. See Activate newly licensed ports for details. However, when you upgrade to RCF 1.12 or later, the modifications are no longer needed because all interfaces are now pre-configured.

b. Record any customizations that were made in the previous RCF and apply these to the new RCF. For example, setting port speeds or hard-coding FEC mode.

EFOS version 3.12.x and later

8. Copy the RCF to the bootflash of switch cs2 using one of the following transfer protocols: HTTP, HTTPS, FTP, TFTP, SFTP, or SCP.

   This example shows SFTP being used to copy an RCF to the bootflash on switch cs2:

```
(cs2)# copy sftp://172.19.2.1/BES-53248-RCF-v1.9-Cluster-HA.txt
nvram:reference-config
Remote Password:**
Mode..................................... TFTP
Set Server IP.................................. 172.19.2.1
Path..................................... /
Filename..................................... BES-53248_RCF_v1.9-
Cluster-HA.txt
Data Type.................................... Config Script
Destination Filename.......................... reference-config.scr
Management access will be blocked for the duration of the transfer
Are you sure you want to start? (y/n) y
TFTP Code transfer starting...
File transfer operation completed successfully.
```

9. Verify that the script was downloaded and saved under the file name you gave it:

   `script list`

```
(cs2)# script list

Configuration Script Name                  Size(Bytes)  Date of
Modification
-----------------------------------------  -----------
--------------------
reference-config.scr                       2680         2024 05 31
21:54:22
2 configuration script(s) found.
2042 Kbytes free.
```

10. Apply the script to the switch:

    `script apply`

```
(cs2)# script apply reference-config.scr

Are you sure you want to apply the configuration script? (y/n) y

The system has unsaved changes.
Would you like to save them now? (y/n) y
Config file 'startup-config' created successfully.
Configuration Saved!

Configuration script 'reference-config.scr' applied.
```

All other EFOS versions

8. Copy the RCF to the bootflash of switch cs2 using one of the following transfer protocols: HTTP, HTTPS, FTP, TFTP, SFTP, or SCP.

   This example shows SFTP being used to copy an RCF to the bootflash on switch cs2:

```
(cs2)# copy sftp://172.19.2.1/tmp/BES-53248_RCF_v1.9-Cluster-HA.txt
nvram:script BES-53248_RCF_v1.9-Cluster-HA.scr
Remote Password:**
Mode..................................... SFTP
Set Server IP.................................. 172.19.2.1
Path..................................... //tmp/
Filename..................................... BES-53248_RCF_v1.9-
Cluster-HA.txt
Data Type..................................... Config Script
Destination Filename.......................... BES-53248_RCF_v1.9-
Cluster-HA.scr
Management access will be blocked for the duration of the transfer
Are you sure you want to start? (y/n) y
SFTP Code transfer starting...
File transfer operation completed successfully.
```

9. Verify that the script was downloaded and saved to the file name you gave it:

   ```
   script list
   ```

```
(cs2)# script list

Configuration Script Name                    Size(Bytes)  Date of
Modification
-----------------------------------------  -----------
--------------------
BES-53248_RCF_v1.9-Cluster-HA.scr          2241         2020 09 30
05:41:00

1 configuration script(s) found.
```

10. Apply the script to the switch:

    `script apply`

```
(cs2)# script apply BES-53248_RCF_v1.9-Cluster-HA.scr

Are you sure you want to apply the configuration script? (y/n) y

The system has unsaved changes.
Would you like to save them now? (y/n) y
Config file 'startup-config' created successfully.
Configuration Saved!

Configuration script 'BES-53248_RCF_v1.9-Cluster-HA.scr' applied.
```

11. Examine the banner output from the `show clibanner` command. You must read and follow these instructions to ensure the proper configuration and operation of the switch.

    `show clibanner`

Show example

```
(cs2)# show clibanner

Banner Message configured :
=========================
BES-53248 Reference Configuration File v1.9 for Cluster/HA/RDMA

Switch   : BES-53248
Filename : BES-53248-RCF-v1.9-Cluster.txt
Date     : 10-26-2022
Version  : v1.9
Port Usage:
Ports 01 - 16: 10/25GbE Cluster Node Ports, base config
Ports 17 - 48: 10/25GbE Cluster Node Ports, with licenses
Ports 49 - 54: 40/100GbE Cluster Node Ports, with licenses, added
right to left
Ports 55 - 56: 100GbE Cluster ISL Ports, base config
NOTE:
- The 48 SFP28/SFP+ ports are organized into 4-port groups in terms
of port
speed:
Ports 1-4, 5-8, 9-12, 13-16, 17-20, 21-24, 25-28, 29-32, 33-36, 37-
40, 41-44,
45-48
The port speed should be the same (10GbE or 25GbE) across all ports
in a 4-port
group
- If additional licenses are purchased, follow the 'Additional Node
Ports
activated with Licenses' section for instructions
- If SSH is active, it will have to be re-enabled manually after
'erase
startup-config'
command has been executed and the switch rebooted
```

12. On the switch, verify that the additional licensed ports appear after the RCF is applied:

```
show port all | exclude Detach
```

Show example

```
(cs2)# show port all | exclude Detach

                Admin     Physical     Physical   Link   Link
LACP   Actor
Intf      Type  Mode      Mode         Status     Status Trap
Mode   Timeout
--------- ------ --------- ------------ ---------- ------ -------
------ --------
0/1             Enable    Auto                    Down   Enable
Enable long
0/2             Enable    Auto                    Down   Enable
Enable long
0/3             Enable    Auto                    Down   Enable
Enable long
0/4             Enable    Auto                    Down   Enable
Enable long
0/5             Enable    Auto                    Down   Enable
Enable long
0/6             Enable    Auto                    Down   Enable
Enable long
0/7             Enable    Auto                    Down   Enable
Enable long
0/8             Enable    Auto                    Down   Enable
Enable long
0/9             Enable    Auto                    Down   Enable
Enable long
0/10            Enable    Auto                    Down   Enable
Enable long
0/11            Enable    Auto                    Down   Enable
Enable long
0/12            Enable    Auto                    Down   Enable
Enable long
0/13            Enable    Auto                    Down   Enable
Enable long
0/14            Enable    Auto                    Down   Enable
Enable long
0/15            Enable    Auto                    Down   Enable
Enable long
0/16            Enable    Auto                    Down   Enable
Enable long
0/49            Enable    40G Full                Down   Enable
Enable long
0/50            Enable    40G Full                Down   Enable
Enable long
```

```
0/51            Enable    100G Full               Down   Enable
Enable long
0/52            Enable    100G Full               Down   Enable
Enable long
0/53            Enable    100G Full               Down   Enable
Enable long
0/54            Enable    100G Full               Down   Enable
Enable long
0/55            Enable    100G Full               Down   Enable
Enable long
0/56            Enable    100G Full               Down   Enable
Enable long
```

13. Verify on the switch that your changes have been made.

```
show running-config
```

14. Save the running configuration so that it becomes the startup configuration when you reboot the switch:

    `write memory`

    Show example

```
(cs2)# write memory
This operation may take a few minutes.
Management interfaces will not be available during this time.

Are you sure you want to save? (y/n) y

Config file 'startup-config' created successfully.
Configuration Saved!
```

15. Reboot the switch and verify that the running configuration is correct.

    `reload`

```
(cs2)# reload
Are you sure you would like to reset the system? (y/n) y
System will now restart!
```

16. On cluster switch cs2, bring up the ports connected to the cluster ports of the nodes.

```
(cs2)> enable
(cs2)# configure
(cs2)(Config)# interface 0/1-0/16
(cs2)(Interface 0/1-0/16)# no shutdown
(cs2)(Config)# exit
```

17. Save the running configuration to the startup configuration:

    `write memory`

    Show example

    ```
    (cs2)# write memory

    This operation may take a few minutes.
    Management interfaces will not be available during this time.

    Are you sure you want to save? (y/n) y

    Config file 'startup-config' created successfully.
    Configuration Saved!
    ```

18. Verify the ports on switch cs2:

    ```
    show interfaces status all | exclude Detach
    ```

Show example

```
(cs1)# show interfaces status all | exclude Detach

                                Link    Physical    Physical
Media       Flow
Port       Name                 State   Mode        Status      Type
Control     VLAN
---------  -------------------  ------  ----------  ----------
----------  ----------  ------
.
.
.
0/16       10/25GbE Node Port   Down    Auto
Inactive    Trunk
0/17       10/25GbE Node Port   Down    Auto
Inactive    Trunk
0/18       10/25GbE Node Port   Up      25G Full    25G Full
25GBase-SR  Inactive    Trunk
0/19       10/25GbE Node Port   Up      25G Full    25G Full
25GBase-SR  Inactive    Trunk
.
.
.
0/50       40/100GbE Node Port  Down    Auto
Inactive    Trunk
0/51       40/100GbE Node Port  Down    Auto
Inactive    Trunk
0/52       40/100GbE Node Port  Down    Auto
Inactive    Trunk
0/53       40/100GbE Node Port  Down    Auto
Inactive    Trunk
0/54       40/100GbE Node Port  Down    Auto
Inactive    Trunk
0/55       Cluster   ISL Port   Up      Auto        100G Full
Copper      Inactive    Trunk
0/56       Cluster   ISL Port   Up      Auto        100G Full
Copper      Inactive    Trunk
```

19. Verify the health of cluster ports on the cluster.
    a. Verify that e0b ports are up and healthy across all nodes in the cluster:

```
network port show -ipspace Cluster
```

Show example

```
cluster1::*> network port show -ipspace Cluster
Node: cluster1-01

Ignore
                                                  Speed(Mbps)
Health  Health
Port      IPspace      Broadcast Domain Link MTU  Admin/Oper
Status  Status
--------- ------------ ---------------- ---- ---- -----------
-------- -----
e0a       Cluster      Cluster          up   9000  auto/10000
healthy  false
e0b       Cluster      Cluster          up   9000  auto/10000
healthy  false

Node: cluster1-02


Ignore
                                                  Speed(Mbps)
Health  Health
Port      IPspace      Broadcast Domain Link MTU  Admin/Oper
Status  Status
--------- ------------ ---------------- ---- ---- -----------
-------- -----
e0a       Cluster      Cluster          up   9000  auto/10000
healthy  false
e0b       Cluster      Cluster          up   9000  auto/10000
healthy  false

Node: cluster1-03

Ignore
                                                  Speed(Mbps)
Health  Health
Port      IPspace      Broadcast Domain Link MTU  Admin/Oper
Status  Status
--------- ------------ ---------------- ---- ---- -----------
-------- -----
e0a       Cluster      Cluster          up   9000  auto/100000
healthy false
e0b       Cluster      Cluster          up   9000  auto/100000
healthy false
```

```
Node: cluster1-04

Ignore
                                                          Speed(Mbps)
Health  Health
Port      IPspace      Broadcast Domain Link MTU  Admin/Oper
Status  Status
--------- ------------ ---------------- ---- ---- -----------
-------- -----
e0a       Cluster      Cluster          up   9000  auto/100000
healthy false
e0b       Cluster      Cluster          up   9000  auto/100000
healthy false
```

b. Verify the switch health from the cluster:

```
network device-discovery show
```

Show example

```
cluster1::*> network device-discovery show -protocol cdp
Node/       Local  Discovered
Protocol    Port   Device (LLDP: ChassisID)  Interface
Platform
----------- ------ ------------------------- -----------------
--------
cluster1-01/cdp
            e0a    cs1                       0/2
BES-53248
            e0b    cs2                       0/2
BES-53248
cluster01-2/cdp
            e0a    cs1                       0/1
BES-53248
            e0b    cs2                       0/1
BES-53248
cluster01-3/cdp
            e0a    cs1                       0/4
BES-53248
            e0b    cs2                       0/4
BES-53248
cluster1-04/cdp
            e0a    cs1                       0/3
BES-53248
            e0b    cs2                       0/2
BES-53248
```

20. Verify that the cluster displays information for both cluster switches.

ONTAP 9.8 and later

Beginning with ONTAP 9.8, use the command:

```
system switch ethernet show -is-monitoring-enabled-operational true
```

```
cluster1::*> system switch ethernet show -is-monitoring-enabled
-operational true
Switch                      Type               Address          Model
--------------------------- ------------------ ----------------
---------------
cs1                         cluster-network    10.228.143.200   BES-
53248
           Serial Number: QTWCU22510008
            Is Monitored: true
                  Reason: None
        Software Version: 3.10.0.3
          Version Source: CDP/ISDP

cs2                         cluster-network    10.228.143.202   BES-
53248
           Serial Number: QTWCU22510009
            Is Monitored: true
                  Reason: None
        Software Version: 3.10.0.3
          Version Source: CDP/ISDP
cluster1::*>
```

ONTAP 9.7 and earlier

For ONTAP 9.7 and earlier, use the command:

```
system cluster-switch show -is-monitoring-enabled-operational true
```

```
cluster1::*> system cluster-switch show -is-monitoring-enabled
-operational true
Switch                        Type               Address          Model
----------------------------- ------------------ ----------------
---------------
cs1                           cluster-network    10.228.143.200   BES-
53248
           Serial Number: QTWCU22510008
            Is Monitored: true
                  Reason: None
        Software Version: 3.10.0.3
          Version Source: CDP/ISDP

cs2                           cluster-network    10.228.143.202   BES-
53248
           Serial Number: QTWCU22510009
            Is Monitored: true
                  Reason: None
        Software Version: 3.10.0.3
          Version Source: CDP/ISDP
cluster1::*>
```

21. Repeat steps 1 to 20 on switch cs1.
22. Enable auto-revert on the cluster LIFs:

```
network interface modify -vserver Cluster -lif * -auto-revert true
```

23. . Verify that the cluster LIFs have reverted to their home port:

```
network interface show -vserver Cluster
```

For further details, see Revert a LIF to its home port.

Step 3: Verify the configuration

1. On switch cs1, verify that the switch ports connected to the cluster ports are **up**:

```
show interfaces status all
```

Show example

```
(cs1)# show interfaces status all | exclude Detach

                                Link    Physical    Physical
Media       Flow
Port       Name                 State   Mode        Status      Type
Control     VLAN
---------  -------------------  ------  ----------  ----------
----------  ----------  ------
.
.
.
0/16       10/25GbE Node Port   Down    Auto
Inactive    Trunk
0/17       10/25GbE Node Port   Down    Auto
Inactive    Trunk
0/18       10/25GbE Node Port   Up      25G Full    25G Full
25GBase-SR  Inactive    Trunk
0/19       10/25GbE Node Port   Up      25G Full    25G Full
25GBase-SR  Inactive    Trunk
.
.
.
0/50       40/100GbE Node Port  Down    Auto
Inactive    Trunk
0/51       40/100GbE Node Port  Down    Auto
Inactive    Trunk
0/52       40/100GbE Node Port  Down    Auto
Inactive    Trunk
0/53       40/100GbE Node Port  Down    Auto
Inactive    Trunk
0/54       40/100GbE Node Port  Down    Auto
Inactive    Trunk
0/55       Cluster   ISL Port   Up      Auto        100G Full
Copper      Inactive    Trunk
0/56       Cluster   ISL Port   Up      Auto        100G Full
Copper      Inactive    Trunk
```

2. Verify that the ISL between switches cs1 and cs2 is functional:

```
show port-channel 1/1
```

Show example

```
(cs1)# show port-channel 1/1
Local Interface................................ 1/1
Channel Name................................... Cluster-ISL
Link State..................................... Up
Admin Mode..................................... Enabled
Type........................................... Dynamic
Port-channel Min-links......................... 1
Load Balance Option............................ 7
(Enhanced hashing mode)
Mbr     Device/       Port      Port
Ports   Timeout       Speed     Active
------- ------------- --------- -------
0/55    actor/long    Auto      True
        partner/long
0/56    actor/long    Auto      True
        partner/long
```

3. Verify that the cluster LIFs have reverted to their home port:

```
network interface show -vserver Cluster
```

Show example

```
cluster1::*> network interface show -vserver Cluster
            Logical            Status     Network            Current
Current Is
Vserver     Interface          Admin/Oper Address/Mask       Node
Port    Home
----------- ------------------ ---------- ------------------
------------------- ------- ----
Cluster
            cluster1-01_clus1  up/up      169.254.3.4/23
cluster1-01         e0a     true
            cluster1-01_clus2  up/up      169.254.3.5/23
cluster1-01         e0b     true
            cluster1-02_clus1  up/up      169.254.3.8/23
cluster1-02         e0a     true
            cluster1-02_clus2  up/up      169.254.3.9/23
cluster1-02         e0b     true
            cluster1-03_clus1  up/up      169.254.1.3/23
cluster1-03         e0a     true
            cluster1-03_clus2  up/up      169.254.1.1/23
cluster1-03         e0b     true
            cluster1-04_clus1  up/up      169.254.1.6/23
cluster1-04         e0a     true
            cluster1-04_clus2  up/up      169.254.1.7/23
cluster1-04         e0b     true
```

4. Verify that the cluster is healthy:

   `cluster show`

   Show example

```
cluster1::*> cluster show
Node                 Health  Eligibility   Epsilon
-------------------- ------- ------------- -------
cluster1-01          true    true          false
cluster1-02          true    true          false
cluster1-03          true    true          true
cluster1-04          true    true          false
```

5. Verify the connectivity of the remote cluster interfaces:

ONTAP 9.9.1 and later

You can use the `network interface check cluster-connectivity` command to start an accessibility check for cluster connectivity and then display the details:

`network interface check cluster-connectivity start` and `network interface check cluster-connectivity show`

```
cluster1::*> network interface check cluster-connectivity start
```

NOTE: Wait for a number of seconds before running the `show` command to display the details.

```
cluster1::*> network interface check cluster-connectivity show
                                  Source              Destination
Packet
Node   Date                       LIF                 LIF
Loss
------ -------------------------- ------------------- -------------------
------- 
cluster1-01
       3/5/2022 19:21:18 -06:00   cluster1-01_clus2   cluster01-
02_clus1  none
       3/5/2022 19:21:20 -06:00   cluster1-01_clus2   cluster01-
02_clus2  none

cluster1-02
       3/5/2022 19:21:18 -06:00   cluster1-02_clus2   cluster1-02_clus1
none
       3/5/2022 19:21:20 -06:00   cluster1-02_clus2   cluster1-02_clus2
none
```

All ONTAP releases

For all ONTAP releases, you can also use the `cluster ping-cluster -node <name>` command to check the connectivity:

```
cluster ping-cluster -node <name>
```

```
cluster1::*> cluster ping-cluster -node local
Host is cluster1-03
Getting addresses from network interface table...
Cluster cluster1-03_clus1 169.254.1.3 cluster1-03 e0a
Cluster cluster1-03_clus2 169.254.1.1 cluster1-03 e0b
Cluster cluster1-04_clus1 169.254.1.6 cluster1-04 e0a
Cluster cluster1-04_clus2 169.254.1.7 cluster1-04 e0b
Cluster cluster1-01_clus1 169.254.3.4 cluster1-01 e0a
Cluster cluster1-01_clus2 169.254.3.5 cluster1-01 e0b
Cluster cluster1-02_clus1 169.254.3.8 cluster1-02 e0a
Cluster cluster1-02_clus2 169.254.3.9 cluster1-02 e0b
Local = 169.254.1.3 169.254.1.1
Remote = 169.254.1.6 169.254.1.7 169.254.3.4 169.254.3.5 169.254.3.8
169.254.3.9
Cluster Vserver Id = 4294967293
Ping status:
............
Basic connectivity succeeds on 12 path(s)
Basic connectivity fails on 0 path(s)
................................................
Detected 9000 byte MTU on 12 path(s):
  Local 169.254.1.3 to Remote 169.254.1.6
  Local 169.254.1.3 to Remote 169.254.1.7
  Local 169.254.1.3 to Remote 169.254.3.4
  Local 169.254.1.3 to Remote 169.254.3.5
  Local 169.254.1.3 to Remote 169.254.3.8
  Local 169.254.1.3 to Remote 169.254.3.9
  Local 169.254.1.1 to Remote 169.254.1.6
  Local 169.254.1.1 to Remote 169.254.1.7
  Local 169.254.1.1 to Remote 169.254.3.4
  Local 169.254.1.1 to Remote 169.254.3.5
  Local 169.254.1.1 to Remote 169.254.3.8
  Local 169.254.1.1 to Remote 169.254.3.9
Larger than PMTU communication succeeds on 12 path(s)
RPC status:
6 paths up, 0 paths down (tcp check)
6 paths up, 0 paths down (udp check)
```

6. Change the privilege level back to admin:

```
set -privilege admin
```

7. If you suppressed automatic case creation, re-enable it by invoking an AutoSupport message:

```
system node autosupport invoke -node * -type all -message MAINT=END
```

Verify the ONTAP cluster network after an EFOS software or RCF upgrade of the BES-53248 cluster switches

You can use the following commands to verify the health of the ONTAP cluster network after an upgrade of the EFOS software or RCF for BES-53248 cluster switches.

Steps

1. Display information about the network ports on the cluster using the command:

```
network port show -ipspace Cluster
```

`Link` must have the value `up` and `Health Status` must be `healthy`.

Show example

The following example shows the output from the command:

```
cluster1::> network port show -ipspace Cluster

Node: node1

Ignore
                                                  Speed(Mbps) Health
Health
Port   IPspace      Broadcast Domain Link MTU  Admin/Oper  Status
Status
------ ------------ ---------------- ---- ---- ----------- --------
------
e0a    Cluster      Cluster          up   9000  auto/10000 healthy
false
e0b    Cluster      Cluster          up   9000  auto/10000 healthy
false

Node: node2

Ignore
                                                  Speed(Mbps) Health
Health
Port   IPspace      Broadcast Domain Link MTU  Admin/Oper  Status
Status
-----  ------------ ---------------- ---- ---- ----------- --------
------
e0a    Cluster      Cluster          up   9000  auto/10000 healthy
false
e0b    Cluster      Cluster          up   9000  auto/10000 healthy
false
```

2. For each LIF, verify that `Is Home` is `true` and `Status Admin/Oper` is `up` on both nodes, using the command:

```
network interface show -vserver Cluster
```

Show example

```
cluster1::> network interface show -vserver Cluster

            Logical    Status     Network            Current
Current Is
Vserver     Interface  Admin/Oper Address/Mask       Node
Port    Home
----------- ---------- ---------- ------------------ -------------
------- ----
Cluster
            node1_clus1  up/up    169.254.217.125/16 node1
e0a     true
            node1_clus2  up/up    169.254.205.88/16  node1
e0b     true
            node2_clus1  up/up    169.254.252.125/16 node2
e0a     true
            node2_clus2  up/up    169.254.110.131/16 node2
e0b     true
```

3. Verify that the `Health Status` of each node is `true` using the command:

   `cluster show`

Show example

```
cluster1::> cluster show

Node                 Health  Eligibility   Epsilon
-------------------- ------- ------------  ------------
node1                true    true          false
node2                true    true          false
```

What's next?

After you've confirmed the upgrade of your EFOS software or RCF, you can configure switch health monitoring.

Migrate the switches

Migrate CN1610 cluster switches to BES-53248 cluster switches

To migrate the CN1610 cluster switches in a cluster to Broadcom-supported BES-53248 cluster switches, review the migration requirements and then follow the migration procedure.

The following cluster switches are supported:

- CN1610
- BES-53248

Review requirements

Verify that your configuration meets the following requirements:

- Some of the ports on BES-53248 switches are configured to run at 10GbE.
- The 10GbE connectivity from nodes to BES-53248 cluster switches have been planned, migrated, and documented.
- The cluster is fully functioning (there should be no errors in the logs or similar issues).
- Initial customization of the BES-53248 switches is complete, so that:
  - BES-53248 switches are running the latest recommended version of EFOS software.
  - Reference Configuration Files (RCFs) have been applied to the switches.
  - Any site customization, such as DNS, NTP, SMTP, SNMP, and SSH, are configured on the new switches.

Node connections

The cluster switches support the following node connections:

- NetApp CN1610: ports 0/1 through 0/12 (10GbE)
- BES-53248: ports 0/1-0/16 (10GbE/25GbE)

> Additional ports can be activated by purchasing port licenses.

ISL ports

The cluster switches use the following inter-switch link (ISL) ports:

- NetApp CN1610: ports 0/13 through 0/16 (10GbE)
- BES-53248: ports 0/55-0/56 (100GbE)

The *NetApp Hardware Universe* contains information about ONTAP compatibility, supported EFOS firmware, and cabling to BES-53248 cluster switches. See What additional information do I need to install my equipment that is not in HWU? for more information about switch installation requirements.

ISL cabling

The appropriate ISL cabling is as follows:

- **Beginning:** For CN1610 to CN1610 (SFP+ to SFP+), four SFP+ optical fiber or copper direct-attach cables.
- **Final:** For BES-53248 to BES-53248 (QSFP28 to QSFP28), two QSFP28 optical transceivers/fiber or copper direct-attach cables.

Migrate the switches

Follow this procedure to migrate CN1610 cluster switches to BES-53248 cluster switches.

About the examples

The examples in this procedure use the following switch and node nomenclature:

- The examples use two nodes, each deploying two 10 GbE cluster interconnect ports: `e0a` and `e0b`.
- The command outputs might vary depending on different releases of ONTAP software.
- The CN1610 switches to be replaced are `CL1` and `CL2`.
- The BES-53248 switches to replace the CN1610 switches are `cs1` and `cs2`.
- The nodes are `node1` and `node2`.
- The switch CL2 is replaced by cs2 first, followed with CL1 by cs1.
- The BES-53248 switches are pre-loaded with the supported versions of Reference Configuration File (RCF) and Ethernet Fabric OS (EFOS) with ISL cables connected on ports 55 and 56.
- The cluster LIF names are `node1_clus1` and `node1_clus2` for node1, and `node2_clus1` and `node2_clus2` for node2.

About this task

This procedure covers the following scenario:

- The cluster starts with two nodes connected to two CN1610 cluster switches.
- CN1610 switch CL2 is replaced by BES-53248 switch cs2:
  - Shut down the ports to the cluster nodes. All ports must be shut down simultaneously to avoid cluster instability.
  - Disconnect the cables from all cluster ports on all nodes connected to CL2, and then use supported cables to reconnect the ports to the new cluster switch cs2.
- CN1610 switch CL1 is replaced by BES-53248 switch cs1:
  - Shut down the ports to the cluster nodes. All ports must be shut down simultaneously to avoid cluster instability.
  - Disconnect the cables from all cluster ports on all nodes connected to CL1, and then use supported cables to reconnect the ports to the new cluster switch cs1.

> No operational inter-switch link (ISL) is needed during this procedure. This is by design because RCF version changes can affect ISL connectivity temporarily. To ensure non-disruptive cluster operations, the following procedure migrates all of the cluster LIFs to the operational partner switch while performing the steps on the target switch.

Step 1: Prepare for migration

1. If AutoSupport is enabled on this cluster, suppress automatic case creation by invoking an AutoSupport message:

   ```
   system node autosupport invoke -node * -type all -message MAINT=xh
   ```

   where x is the duration of the maintenance window in hours.

The AutoSupport message notifies technical support of this maintenance task so that automatic case creation is suppressed during the maintenance window.

The following command suppresses automatic case creation for two hours:

```
cluster1::*> system node autosupport invoke -node * -type all -message
MAINT=2h
```

2. Change the privilege level to advanced, entering **y** when prompted to continue:

   ```
   set -privilege advanced
   ```

   The advanced prompt (*>) appears.

Step 2: Configure ports and cabling

1. On the new switches, confirm that the ISL is cabled and healthy between switches cs1 and cs2:

   ```
   show port-channel
   ```

Show example

The following example shows that the ISL ports are **up** on switch cs1:

```
(cs1)# show port-channel 1/1
Local Interface................................ 1/1
Channel Name................................... Cluster-ISL
Link State..................................... Up
Admin Mode..................................... Enabled
Type........................................... Dynamic
Port channel Min-links......................... 1
Load Balance Option............................ 7
(Enhanced hashing mode)

Mbr    Device/       Port       Port
Ports  Timeout       Speed      Active
------ ------------- ---------  -------
0/55   actor/long    100G Full  True
       partner/long
0/56   actor/long    100G Full  True
       partner/long
(cs1) #
```

The following example shows that the ISL ports are **up** on switch cs2:

```
(cs2)# show port-channel 1/1
Local Interface................................ 1/1
Channel Name................................... Cluster-ISL
Link State..................................... Up
Admin Mode..................................... Enabled
Type........................................... Dynamic
Port channel Min-links......................... 1
Load Balance Option............................ 7
(Enhanced hashing mode)

Mbr    Device/       Port       Port
Ports  Timeout       Speed      Active
------ ------------- ---------  -------
0/55   actor/long    100G Full  True
       partner/long
0/56   actor/long    100G Full  True
       partner/long
```

2. Display the cluster ports on each node that is connected to the existing cluster switches:

```
network device-discovery show -protocol cdp
```

Show example

The following example displays how many cluster interconnect interfaces have been configured in each node for each cluster interconnect switch:

```
cluster1::*> network device-discovery show -protocol cdp
Node/       Local  Discovered
Protocol    Port   Device (LLDP: ChassisID)  Interface
Platform
----------- ------ ------------------------- ----------------
----------------
node2      /cdp
            e0a    CL1                       0/2
CN1610
            e0b    CL2                       0/2
CN1610
node1      /cdp
            e0a    CL1                       0/1
CN1610
            e0b    CL2                       0/1
CN1610
```

3. Determine the administrative or operational status for each cluster interface.
   a. Verify that all the cluster ports are `up` with a `healthy` status:

      ```
      network port show -ipspace Cluster
      ```

Show example

```
cluster1::*> network port show -ipspace Cluster

Node: node1

Ignore
                                                        Speed(Mbps)
Health   Health
Port      IPspace      Broadcast Domain Link MTU  Admin/Oper
Status   Status
--------- ------------ ---------------- ---- ---- -----------
-------- ------
e0a       Cluster      Cluster          up   9000  auto/10000
healthy  false
e0b       Cluster      Cluster          up   9000  auto/10000
healthy  false

Node: node2

Ignore
                                                        Speed(Mbps)
Health   Health
Port      IPspace      Broadcast Domain Link MTU  Admin/Oper
Status   Status
--------- ------------ ---------------- ---- ---- -----------
-------- ------
e0a       Cluster      Cluster          up   9000  auto/10000
healthy  false
e0b       Cluster      Cluster          up   9000  auto/10000
healthy  false
```

b. Verify that all the cluster interfaces (LIFs) are on their home ports:

```
network interface show -vserver Cluster
```

Show example

```
cluster1::*> network interface show -vserver Cluster

            Logical    Status     Network            Current
Current Is
Vserver     Interface  Admin/Oper Address/Mask       Node
Port    Home
----------- ---------- ---------- ------------------
------------- ------- ----
Cluster
            node1_clus1  up/up    169.254.209.69/16  node1
e0a     true
            node1_clus2  up/up    169.254.49.125/16  node1
e0b     true
            node2_clus1  up/up    169.254.47.194/16  node2
e0a     true
            node2_clus2  up/up    169.254.19.183/16  node2
e0b     true
```

4. Verify that the cluster displays information for both cluster switches:

ONTAP 9.8 and later

Beginning with ONTAP 9.8, use the command: `system switch ethernet show -is-monitoring-enabled-operational true`

```
cluster1::*> system switch ethernet show -is-monitoring-enabled
-operational true
Switch                        Type              Address       Model
----------------------------- ----------------- ------------- --------
CL1                           cluster-network  10.10.1.101   CN1610
     Serial Number: 01234567
      Is Monitored: true
            Reason:
  Software Version: 1.3.0.3
    Version Source: ISDP

CL2                           cluster-network  10.10.1.102   CN1610
     Serial Number: 01234568
      Is Monitored: true
            Reason:
  Software Version: 1.3.0.3
    Version Source: ISDP
cluster1::*>
```

ONTAP 9.7 and earlier

For ONTAP 9.7 and earlier, use the command: `system cluster-switch show -is-monitoring-enabled-operational true`

```
cluster1::*> system cluster-switch show -is-monitoring-enabled
-operational true
Switch                        Type              Address       Model
----------------------------- ----------------- ------------- --------
CL1                           cluster-network  10.10.1.101   CN1610
     Serial Number: 01234567
      Is Monitored: true
            Reason:
  Software Version: 1.3.0.3
    Version Source: ISDP

CL2                           cluster-network  10.10.1.102   CN1610
     Serial Number: 01234568
      Is Monitored: true
            Reason:
  Software Version: 1.3.0.3
    Version Source: ISDP
cluster1::*>
```

5. Disable auto-revert on the cluster LIFs.

```
cluster1::*> network interface modify -vserver Cluster -lif * -auto
-revert false
```

6. On cluster switch CL2, shut down the ports connected to the cluster ports of the nodes in order to fail over the cluster LIFs:

```
(CL2)# configure
(CL2)(Config)# interface 0/1-0/16
(CL2)(Interface 0/1-0/16)# shutdown
(CL2)(Interface 0/1-0/16)# exit
(CL2)(Config)# exit
(CL2)#
```

7. Verify that the cluster LIFs have failed over to the ports hosted on cluster switch CL1. This might take a few seconds.

```
network interface show -vserver Cluster
```

Show example

```
cluster1::*> network interface show -vserver Cluster
            Logical      Status     Network            Current
Current Is
Vserver     Interface    Admin/Oper Address/Mask       Node
Port    Home
----------- ------------ ---------- ------------------ -------------
------- ----
Cluster
            node1_clus1  up/up      169.254.209.69/16  node1
e0a     true
            node1_clus2  up/up      169.254.49.125/16  node1
e0a     false
            node2_clus1  up/up      169.254.47.194/16  node2
e0a     true
            node2_clus2  up/up      169.254.19.183/16  node2
e0a     false
```

8. Verify that the cluster is healthy:

   `cluster show`

   Show example

```
cluster1::*> cluster show
Node       Health  Eligibility   Epsilon
---------- ------- ------------- -------
node1      true    true          false
node2      true    true          false
```

9. Move all cluster node connection cables from the old CL2 switch to the new cs2 switch.
10. Confirm the health of the network connections moved to cs2:

    `network port show -ipspace Cluster`

Show example

```
cluster1::*> network port show -ipspace Cluster

Node: node1

Ignore
                                                  Speed(Mbps) Health
Health
Port      IPspace      Broadcast Domain Link MTU  Admin/Oper  Status
Status
--------- ------------ ---------------- ---- ---- -----------
-------- ------
e0a       Cluster      Cluster          up   9000  auto/10000
healthy  false
e0b       Cluster      Cluster          up   9000  auto/10000
healthy  false

Node: node2

Ignore
                                                  Speed(Mbps) Health
Health
Port      IPspace      Broadcast Domain Link MTU  Admin/Oper  Status
Status
--------- ------------ ---------------- ---- ---- -----------
-------- ------
e0a       Cluster      Cluster          up   9000  auto/10000
healthy  false
e0b       Cluster      Cluster          up   9000  auto/10000
healthy  false
```

All cluster ports that were moved should be `up`.

11. Check neighbor information on the cluster ports:

    `network device-discovery show -protocol cdp`

Show example

```
cluster1::*> network device-discovery show -protocol cdp
Node/       Local  Discovered
Protocol    Port   Device (LLDP: ChassisID)  Interface
Platform
----------- ------ ------------------------- ----------------
----------------
node2      /cdp
            e0a    CL1                       0/2
CN1610
            e0b    cs2                       0/2               BES-
53248
node1      /cdp
            e0a    CL1                       0/1
CN1610
            e0b    cs2                       0/1               BES-
53248
```

12. Confirm the switch port connections are healthy from switch cs2's perspective:

```
cs2# show interface all
cs2# show isdp neighbors
```

13. On cluster switch CL1, shut down the ports connected to the cluster ports of the nodes in order to fail over the cluster LIFs:

```
(CL1)# configure
(CL1)(Config)# interface 0/1-0/16
(CL1)(Interface 0/1-0/16)# shutdown
(CL1)(Interface 0/13-0/16)# exit
(CL1)(Config)# exit
(CL1)#
```

All cluster LIFs failover to the cs2 switch.

14. Verify that the cluster LIFs have failed over to the ports hosted on switch cs2. This might take a few seconds:

```
network interface show -vserver Cluster
```

Show example

```
cluster1::*> network interface show -vserver Cluster
            Logical      Status     Network            Current
Current Is
Vserver     Interface    Admin/Oper Address/Mask       Node
Port    Home
----------- ------------ ---------- ------------------ -------------
------- ----
Cluster
            node1_clus1  up/up      169.254.209.69/16  node1
e0b     false
            node1_clus2  up/up      169.254.49.125/16  node1
e0b     true
            node2_clus1  up/up      169.254.47.194/16  node2
e0b     false
            node2_clus2  up/up      169.254.19.183/16  node2
e0b     true
```

15. Verify that the cluster is healthy:

    `cluster show`

    Show example

    ```
    cluster1::*> cluster show
    Node       Health  Eligibility   Epsilon
    ---------- ------- ------------- -------
    node1      true    true          false
    node2      true    true          false
    ```

16. Move the cluster node connection cables from CL1 to the new cs1 switch.
17. Confirm the health of the network connections moved to cs1:

    `network port show -ipspace Cluster`

Show example

```
cluster1::*> network port show -ipspace Cluster

Node: node1

Ignore
                                                  Speed(Mbps) Health
Health
Port      IPspace      Broadcast Domain Link MTU  Admin/Oper  Status
Status
--------- ------------ ---------------- ---- ---- -----------
-------- ------
e0a       Cluster      Cluster          up   9000  auto/10000
healthy  false
e0b       Cluster      Cluster          up   9000  auto/10000
healthy  false

Node: node2

Ignore
                                                  Speed(Mbps) Health
Health
Port      IPspace      Broadcast Domain Link MTU  Admin/Oper  Status
Status
--------- ------------ ---------------- ---- ---- -----------
-------- ------
e0a       Cluster      Cluster          up   9000  auto/10000
healthy  false
e0b       Cluster      Cluster          up   9000  auto/10000
healthy  false
```

All cluster ports that were moved should be `up`.

18. Check neighbor information on the cluster ports:

    `network device-discovery show`

Show example

```
cluster1::*> network device-discovery show -protocol cdp
Node/       Local  Discovered
Protocol    Port   Device (LLDP: ChassisID)  Interface
Platform
----------- ------ ------------------------- ----------------
----------------
node1      /cdp
            e0a    cs1                       0/1               BES-
53248
            e0b    cs2                       0/1               BES-
53248
node2      /cdp
            e0a    cs1                       0/2               BES-
53248
            e0b    cs2                       0/2               BES-
53248
```

19. Confirm the switch port connections are healthy from switch cs1's perspective:

```
cs1# show interface all
cs1# show isdp neighbors
```

20. Verify that the ISL between cs1 and cs2 is still operational:

```
show port-channel
```

Show example

The following example shows that the ISL ports are **up** on switch cs1:

```
(cs1)# show port-channel 1/1
Local Interface................................ 1/1
Channel Name................................... Cluster-ISL
Link State..................................... Up
Admin Mode..................................... Enabled
Type........................................... Dynamic
Port channel Min-links......................... 1
Load Balance Option............................ 7
(Enhanced hashing mode)

Mbr    Device/       Port       Port
Ports  Timeout       Speed      Active
------ ------------- ---------  -------
0/55   actor/long    100G Full  True
       partner/long
0/56   actor/long    100G Full  True
       partner/long
(cs1) #
```

The following example shows that the ISL ports are **up** on switch cs2:

```
(cs2)# show port-channel 1/1
Local Interface................................ 1/1
Channel Name................................... Cluster-ISL
Link State..................................... Up
Admin Mode..................................... Enabled
Type........................................... Dynamic
Port channel Min-links......................... 1
Load Balance Option............................ 7
(Enhanced hashing mode)

Mbr    Device/       Port       Port
Ports  Timeout       Speed      Active
------ ------------- ---------  -------
0/55   actor/long    100G Full  True
       partner/long
0/56   actor/long    100G Full  True
       partner/long
```

21. Delete the replaced CN1610 switches from the cluster's switch table, if they are not automatically removed:

ONTAP 9.8 and later

Beginning with ONTAP 9.8, use the command: `system switch ethernet delete -device device-name`

```
cluster::*> system switch ethernet delete -device CL1
cluster::*> system switch ethernet delete -device CL2
```

ONTAP 9.7 and earlier

For ONTAP 9.7 and earlier, use the command: `system cluster-switch delete -device device-name`

```
cluster::*> system cluster-switch delete -device CL1
cluster::*> system cluster-switch delete -device CL2
```

Step 3: Verify the configuration

1. Enable auto-revert on the cluster LIFs.

```
cluster1::*> network interface modify -vserver Cluster -lif * -auto
-revert true
```

2. On switch cs2, shut down and restart all cluster ports to trigger an auto-revert of all cluster LIFs that are not on their home ports.

```
cs2> enable
cs2# configure
cs2(config)# interface 0/1-0/16
cs2(config-if-range)# shutdown

(Wait for 5-10 seconds before re-enabling the ports)

cs2(config-if-range)# no shutdown

(After executing the no shutdown command, the nodes detect the change
and begin to auto-revert the cluster LIFs to their home ports)

cs2(config-if-range)# exit
cs2(config)# exit
cs2#
```

3. Verify that the cluster LIFs have reverted to their home ports (this might take a minute):

```
network interface show -vserver Cluster
```

If any of the cluster LIFs have not reverted to their home port, manually revert them. You must connect to each node-mgmt LIF or SP/BMC system console of the local node that owns the LIF:

```
network interface revert -vserver Cluster -lif *
```

4. Verify that the cluster is healthy:

```
cluster show
```

5. Verify the connectivity of the remote cluster interfaces:

ONTAP 9.9.1 and later

You can use the `network interface check cluster-connectivity` command to start an accessibility check for cluster connectivity and then display the details:

`network interface check cluster-connectivity start` and `network interface check cluster-connectivity show`

```
cluster1::*> network interface check cluster-connectivity start
```

NOTE: Wait for a number of seconds before running the `show` command to display the details.

```
cluster1::*> network interface check cluster-connectivity show
                                  Source           Destination
Packet
Node   Date                       LIF              LIF
Loss
------ -------------------------- ---------------- -----------------
-----------
node1
       3/5/2022 19:21:18 -06:00   node1_clus2      node2_clus1
none
       3/5/2022 19:21:20 -06:00   node1_clus2      node2_clus2
none

node2
       3/5/2022 19:21:18 -06:00   node2_clus2      node1_clus1
none
       3/5/2022 19:21:20 -06:00   node2_clus2      node1_clus2
none
```

All ONTAP releases

For all ONTAP releases, you can also use the `cluster ping-cluster -node <name>` command to check the connectivity:

```
cluster ping-cluster -node <name>
```

```
cluster1::*> cluster ping-cluster -node node2
Host is node2
Getting addresses from network interface table...
Cluster node1_clus1 169.254.209.69 node1     e0a
Cluster node1_clus2 169.254.49.125 node1     e0b
Cluster node2_clus1 169.254.47.194 node2     e0a
Cluster node2_clus2 169.254.19.183 node2     e0b
Local = 169.254.47.194 169.254.19.183
Remote = 169.254.209.69 169.254.49.125
Cluster Vserver Id = 4294967293
Ping status:....
Basic connectivity succeeds on 4 path(s)
Basic connectivity fails on 0 path(s)
................
Detected 9000 byte MTU on 4 path(s):
    Local 169.254.19.183 to Remote 169.254.209.69
    Local 169.254.19.183 to Remote 169.254.49.125
    Local 169.254.47.194 to Remote 169.254.209.69
    Local 169.254.47.194 to Remote 169.254.49.125
Larger than PMTU communication succeeds on 4 path(s)
RPC status:
2 paths up, 0 paths down (tcp check)
2 paths up, 0 paths down (udp check)
```

6. If you suppressed automatic case creation, re-enable it by invoking an AutoSupport message:

```
system node autosupport invoke -node * -type all -message MAINT=END
```

```
cluster::*> system node autosupport invoke -node * -type all -message
MAINT=END
```

What's next?

After you've migrated your switches, you can configure switch health monitoring.

Migrate to a switched NetApp cluster environment

If you have an existing two-node *switchless* cluster environment, you can migrate to a two-node *switched* cluster environment using Broadcom-supported BES-53248 cluster switches, which enables you to scale beyond two nodes in the cluster.

The migration process works for all cluster node ports using optical or Twinax ports, but it is not supported on this switch if nodes are using onboard 10GBASE-T RJ45 ports for the cluster network ports.

Review requirements

Review the following requirements for the cluster environment.

- Be aware that most systems require two dedicated cluster-network ports on each controller.
- Make sure that the BES-53248 cluster switch is set up as described in Replace requirements before starting this migration process.
- For the two-node switchless configuration, ensure that:
  - The two-node switchless configuration is properly set up and functioning.
  - The nodes are running ONTAP 9.5P8 and later. Support for 40/100 GbE cluster ports starts with EFOS firmware version 3.4.4.6 and later.
  - All cluster ports are in the **up** state.
  - All cluster logical interfaces (LIFs) are in the **up** state and on their home ports.
- For the Broadcom-supported BES-53248 cluster switch configuration, ensure that:
  - The BES-53248 cluster switch is fully functional on both switches.
  - Both switches have management network connectivity.
  - There is console access to the cluster switches.
  - BES-53248 node-to-node switch and switch-to-switch connections are using Twinax or fiber cables.

    The *NetApp Hardware Universe* contains information about ONTAP compatibility, supported EFOS firmware, and cabling to BES-53248 switches. See What additional information do I need to install my equipment that is not in HWU? for more information about switch installation requirements.
- Inter-Switch Link (ISL) cables are connected to ports 0/55 and 0/56 on both BES-53248 switches.
- Initial customization of both the BES-53248 switches is complete, so that:
  - BES-53248 switches are running the latest version of software.
  - BES-53248 switches have optional port licenses installed, if purchased.
  - Reference Configuration Files (RCFs) are applied to the switches.
- Any site customization (SMTP, SNMP, and SSH) are configured on the new switches.

Port group speed constraints

- The 48 10/25GbE (SFP28/SFP+) ports are combined into 12 x 4-port groups as follows: Ports 1-4, 5-8, 9-12, 13-16, 17-20, 21-24, 25-28, 29-32, 33-36, 37-40, 41-44, and 45-48.
- The SFP28/SFP+ port speed must be the same (10GbE or 25GbE) across all ports in the 4-port group.
- If speeds in a 4-port group are different, the switch ports will not operate correctly.

Migrate to the cluster environment

About the examples

The examples in this procedure use the following cluster switch and node nomenclature:

- The names of the BES-53248 switches are `cs1` and `cs2`.
- The names of the cluster SVMs are `node1` and `node2`.
- The names of the LIFs are `node1_clus1` and `node1_clus2` on node 1, and `node2_clus1` and `node2_clus2` on node 2 respectively.

- The `cluster1::*>` prompt indicates the name of the cluster.
- The cluster ports used in this procedure are `e0a` and `e0b`.

  The *NetApp Hardware Universe* contains the latest information about the actual cluster ports for your platforms.

Step 1: Prepare for migration

1. If AutoSupport is enabled on this cluster, suppress automatic case creation by invoking an AutoSupport message:

   ```
   system node autosupport invoke -node * -type all -message MAINT=xh
   ```

   where x is the duration of the maintenance window in hours.

   > The AutoSupport message notifies technical support of this maintenance task so that automatic case creation is suppressed during the maintenance window.

   The following command suppresses automatic case creation for two hours:

   ```
   cluster1::*> system node autosupport invoke -node * -type all -message
   MAINT=2h
   ```

2. Change the privilege level to advanced, entering **y** when prompted to continue:

   ```
   set -privilege advanced
   ```

   The advanced prompt (`*>`) appears.

Step 2: Configure ports and cabling

1. Disable all activated node-facing ports (not ISL ports) on both the new cluster switches cs1 **and** cs2.

   > You must not disable the ISL ports.

   The following example shows that node-facing ports 1 through 16 are disabled on switch cs1:

   ```
   (cs1)# configure
   (cs1)(Config)# interface 0/1-0/16
   (cs1)(Interface 0/1-0/16)# shutdown
   (cs1)(Interface 0/1-0/16)# exit
   (cs1)(Config)# exit
   ```

2. Verify that the ISL and the physical ports on the ISL between the two BES-53248 switches cs1 and cs2 are up:

   ```
   show port-channel
   ```

Show example

The following example shows that the ISL ports are up on switch cs1:

```
(cs1)# show port-channel 1/1
Local Interface................................ 1/1
Channel Name................................... Cluster-ISL
Link State..................................... Up
Admin Mode..................................... Enabled
Type........................................... Dynamic
Port channel Min-links......................... 1
Load Balance Option............................ 7
(Enhanced hashing mode)

Mbr    Device/       Port       Port
Ports  Timeout       Speed      Active
------ ------------- ---------  -------
0/55   actor/long    100G Full  True
       partner/long
0/56   actor/long    100G Full  True
       partner/long
(cs1) #
```

The following example shows that the ISL ports are up on switch cs2:

```
(cs2)# show port-channel 1/1
Local Interface................................ 1/1
Channel Name................................... Cluster-ISL
Link State..................................... Up
Admin Mode..................................... Enabled
Type........................................... Dynamic
Port channel Min-links......................... 1
Load Balance Option............................ 7
(Enhanced hashing mode)

Mbr    Device/       Port       Port
Ports  Timeout       Speed      Active
------ ------------- ---------  -------
0/55   actor/long    100G Full  True
       partner/long
0/56   actor/long    100G Full  True
       partner/long
```

3. Display the list of neighboring devices:

`show isdp neighbors`

This command provides information about the devices that are connected to the system.

Show example

The following example lists the neighboring devices on switch cs1:

```
(cs1)# show isdp neighbors

Capability Codes: R - Router, T - Trans Bridge, B - Source Route
Bridge,
                  S - Switch, H - Host, I - IGMP, r - Repeater
Device ID      Intf     Holdtime  Capability   Platform    Port ID
-------------- -------- --------- ------------ ----------- ---------
cs2            0/55     176       R            BES-53248   0/55
cs2            0/56     176       R            BES-53248   0/56
```

The following example lists the neighboring devices on switch cs2:

```
(cs2)# show isdp neighbors

Capability Codes: R - Router, T - Trans Bridge, B - Source Route
Bridge,
                  S - Switch, H - Host, I - IGMP, r - Repeater
Device ID      Intf     Holdtime  Capability   Platform    Port ID
-------------- -------- --------- ------------ ----------- ---------
cs2            0/55     176       R            BES-53248   0/55
cs2            0/56     176       R            BES-53248   0/56
```

4. Verify that all cluster ports are up:

`network port show -ipspace Cluster`

Show example

```
cluster1::*> network port show -ipspace Cluster

Node: node1

                                                            Speed(Mbps) Health
Port      IPspace      Broadcast Domain Link MTU  Admin/Oper  Status
--------- ------------ ---------------- ---- ---- -----------
--------
e0a       Cluster      Cluster          up   9000  auto/10000
healthy
e0b       Cluster      Cluster          up   9000  auto/10000
healthy

Node: node2

                                                            Speed(Mbps) Health
Port      IPspace      Broadcast Domain Link MTU  Admin/Oper  Status
--------- ------------ ---------------- ---- ---- -----------
--------
e0a       Cluster      Cluster          up   9000  auto/10000
healthy
e0b       Cluster      Cluster          up   9000  auto/10000
healthy
```

5. Verify that all cluster LIFs are up and operational:

   ```
   network interface show -vserver Cluster
   ```

Show example

```
cluster1::*> network interface show -vserver Cluster

            Logical      Status     Network            Current
Current Is
Vserver     Interface    Admin/Oper Address/Mask       Node
Port    Home
----------- ------------ ---------- ------------------ -------------
------- -----
Cluster
            node1_clus1  up/up      169.254.209.69/16  node1
e0a     true
            node1_clus2  up/up      169.254.49.125/16  node1
e0b     true
            node2_clus1  up/up      169.254.47.194/16  node2
e0a     true
            node2_clus2  up/up      169.254.19.183/16  node2
e0b     true
```

6. Disable auto-revert on the cluster LIFs.

```
cluster1::*> network interface modify -vserver Cluster -lif * -auto
-revert false
```

7. Disconnect the cable from cluster port e0a on node1, and then connect e0a to port 1 on cluster switch cs1, using the appropriate cabling supported by the BES-53248 switches.

   The *NetApp Hardware Universe* contains more information about cabling.

8. Disconnect the cable from cluster port e0a on node2, and then connect e0a to port 2 on cluster switch cs1, using the appropriate cabling supported by the BES-53248 switches.
9. Enable all node-facing ports on cluster switch cs1.

   The following example shows that ports 1 through 16 are enabled on switch cs1:

```
(cs1)# configure
(cs1)(Config)# interface 0/1-0/16
(cs1)(Interface 0/1-0/16)# no shutdown
(cs1)(Interface 0/1-0/16)# exit
(cs1)(Config)# exit
```

10. Verify that all cluster ports are up:

```
network port show -ipspace Cluster
```

Show example

```
cluster1::*> network port show -ipspace Cluster

Node: node1

Ignore
                                                  Speed(Mbps) Health
Health
Port      IPspace      Broadcast Domain Link MTU  Admin/Oper  Status
Status
--------- ------------ ---------------- ---- ---- -----------
-------- ------
e0a       Cluster      Cluster          up   9000  auto/10000
healthy  false
e0b       Cluster      Cluster          up   9000  auto/10000
healthy  false

Node: node2

Ignore
                                                  Speed(Mbps) Health
Health
Port      IPspace      Broadcast Domain Link MTU  Admin/Oper  Status
Status
--------- ------------ ---------------- ---- ---- -----------
-------- ------
e0a       Cluster      Cluster          up   9000  auto/10000
healthy  false
e0b       Cluster      Cluster          up   9000  auto/10000
healthy  false
```

11. Verify that all cluster LIFs are up and operational:

```
network interface show -vserver Cluster
```

Show example

```
cluster1::*> network interface show -vserver Cluster

         Logical      Status     Network            Current
Current Is
Vserver  Interface    Admin/Oper Address/Mask       Node        Port
Home
-------- ------------ ---------- ------------------ -----------
------- ----
Cluster
         node1_clus1  up/up      169.254.209.69/16  node1       e0a
true
         node1_clus2  up/up      169.254.49.125/16  node1       e0b
true
         node2_clus1  up/up      169.254.47.194/16  node2       e0a
true
         node2_clus2  up/up      169.254.19.183/16  node2       e0b
true
```

12. Display information about the status of the nodes in the cluster:

    `cluster show`

    Show example

    The following example displays information about the health and eligibility of the nodes in the cluster:

    ```
    cluster1::*> cluster show

    Node                 Health  Eligibility   Epsilon
    -------------------- ------- ------------  ------------
    node1                true    true          false
    node2                true    true          false
    ```

13. Disconnect the cable from cluster port e0b on node1, and then connect e0b to port 1 on cluster switch cs2, using the appropriate cabling supported by the BES-53248 switches.
14. Disconnect the cable from cluster port e0b on node2, and then connect e0b to port 2 on cluster switch cs2, using the appropriate cabling supported by the BES-53248 switches.
15. Enable all node-facing ports on cluster switch cs2.

    The following example shows that ports 1 through 16 are enabled on switch cs2:

```
(cs2)# configure
(cs2)(Config)# interface 0/1-0/16
(cs2)(Interface 0/1-0/16)# no shutdown
(cs2)(Interface 0/1-0/16)# exit
(cs2)(Config)# exit
```

16. Verify that all cluster ports are up:

    `network port show -ipspace Cluster`

    Show example

```
cluster1::*> network port show -ipspace Cluster

Node: node1

Ignore
                                                  Speed(Mbps) Health
Health
Port      IPspace      Broadcast Domain Link MTU  Admin/Oper  Status
Status
--------- ------------ ---------------- ---- ---- -----------
-------- ------
e0a       Cluster      Cluster          up   9000  auto/10000
healthy  false
e0b       Cluster      Cluster          up   9000  auto/10000
healthy  false

Node: node2

Ignore
                                                  Speed(Mbps) Health
Health
Port      IPspace      Broadcast Domain Link MTU  Admin/Oper  Status
Status
--------- ------------ ---------------- ---- ---- -----------
-------- ------
e0a       Cluster      Cluster          up   9000  auto/10000
healthy  false
e0b       Cluster      Cluster          up   9000  auto/10000
healthy  false
```

Step 3: Verify the configuration

1. Enable auto-revert on the cluster LIFs.

```
cluster1::*> network interface modify -vserver Cluster -lif * -auto
-revert true
```

2. On switch cs2, shut down and restart all cluster ports to trigger an auto-revert of all cluster LIFs that are not on their home ports.

```
cs2> enable
cs2# configure
cs2(config)# interface 0/1-0/16
cs2(config-if-range)# shutdown

(Wait for 5-10 seconds before re-enabling the ports)

cs2(config-if-range)# no shutdown

(After executing the no shutdown command, the nodes detect the change
and begin to auto-revert the cluster LIFs to their home ports)

cs2(config-if-range)# exit
cs2(config)# exit
cs2#
```

3. Verify that the cluster LIFs have reverted to their home ports (this might take a minute):

   `network interface show -vserver Cluster`

   If any of the cluster LIFs have not reverted to their home port, manually revert them. You must connect to each node-mgmt LIF or SP/BMC system console of the local node that owns the LIF:

   `network interface revert -vserver Cluster -lif *`

4. Verify that all interfaces display `true` for `Is Home`:

   `network interface show -vserver Cluster`

   This might take several minutes to complete.

Show example

```
cluster1::*> network interface show -vserver Cluster

          Logical      Status     Network            Current
Current Is
Vserver   Interface    Admin/Oper Address/Mask       Node       Port
Home
--------- ------------ ---------- ------------------ ----------
------- ----
Cluster
          node1_clus1  up/up      169.254.209.69/16  node1      e0a
true
          node1_clus2  up/up      169.254.49.125/16  node1      e0b
true
          node2_clus1  up/up      169.254.47.194/16  node2      e0a
true
          node2_clus2  up/up      169.254.19.183/16  node2      e0b
true
```

5. Verify that both nodes each have one connection to each switch:

   `show isdp neighbors`

Show example

The following example shows the appropriate results for both switches:

```
(cs1)# show isdp neighbors

Capability Codes: R - Router, T - Trans Bridge, B - Source Route
Bridge,
                  S - Switch, H - Host, I - IGMP, r - Repeater
Device ID      Intf         Holdtime  Capability   Platform -- Port
ID
-------------- ------------ --------- ------------ -----------
----------
node1          0/1          175       H            FAS2750     e0a
node2          0/2          157       H            FAS2750     e0a
cs2            0/55         178       R            BES-53248   0/55
cs2            0/56         178       R            BES-53248   0/56


(cs2)# show isdp neighbors

Capability Codes: R - Router, T - Trans Bridge, B - Source Route
Bridge,
                  S - Switch, H - Host, I - IGMP, r - Repeater
Device ID      Intf         Holdtime  Capability   Platform    Port
ID
-------------- ------------ --------- ------------ -----------
------------
node1          0/1          137       H            FAS2750     e0b
node2          0/2          179       H            FAS2750     e0b
cs1            0/55         175       R            BES-53248   0/55
cs1            0/56         175       R            BES-53248   0/56
```

6. Display information about the discovered network devices in your cluster:

   `network device-discovery show -protocol cdp`

Show example

```
cluster1::*> network device-discovery show -protocol cdp
Node/       Local  Discovered
Protocol    Port   Device (LLDP: ChassisID)  Interface
Platform
----------- ------ ------------------------- ----------------
----------------
node2      /cdp
            e0a    cs1                       0/2               BES-
53248
            e0b    cs2                       0/2               BES-
53248
node1      /cdp
            e0a    cs1                       0/1               BES-
53248
            e0b    cs2                       0/1               BES-
53248
```

7. Verify that the settings are disabled:

   `network options switchless-cluster show`

   > It might take several minutes for the command to complete. Wait for the '3 minute lifetime to expire' announcement.

   The `false` output in the following example shows that the configuration settings are disabled:

   ```
   cluster1::*> network options switchless-cluster show
   Enable Switchless Cluster: false
   ```

8. Verify the status of the node members in the cluster:

   `cluster show`

Show example

The following example shows information about the health and eligibility of the nodes in the cluster:

```
cluster1::*> cluster show

Node                 Health  Eligibility   Epsilon
-------------------- ------- ------------  --------
node1                true    true          false
node2                true    true          false
```

9. Verify the connectivity of the remote cluster interfaces:

ONTAP 9.9.1 and later

You can use the `network interface check cluster-connectivity` command to start an accessibility check for cluster connectivity and then display the details:

`network interface check cluster-connectivity start` and `network interface check cluster-connectivity show`

```
cluster1::*> network interface check cluster-connectivity start
```

NOTE: Wait for a number of seconds before running the `show` command to display the details.

```
cluster1::*> network interface check cluster-connectivity show
                                  Source           Destination
Packet
Node   Date                       LIF              LIF
Loss
------ -------------------------- ---------------- -----------------
-----------
node1
       3/5/2022 19:21:18 -06:00   node1_clus2      node2_clus1
none
       3/5/2022 19:21:20 -06:00   node1_clus2      node2_clus2
none

node2
       3/5/2022 19:21:18 -06:00   node2_clus2      node1_clus1
none
       3/5/2022 19:21:20 -06:00   node2_clus2      node1_clus2
none
```

All ONTAP releases

For all ONTAP releases, you can also use the `cluster ping-cluster -node <name>` command to check the connectivity:

```
cluster ping-cluster -node <name>
```

```
cluster1::*> cluster ping-cluster -node node2
Host is node2
Getting addresses from network interface table...
Cluster node1_clus1 169.254.209.69 node1     e0a
Cluster node1_clus2 169.254.49.125 node1     e0b
Cluster node2_clus1 169.254.47.194 node2     e0a
Cluster node2_clus2 169.254.19.183 node2     e0b
Local = 169.254.47.194 169.254.19.183
Remote = 169.254.209.69 169.254.49.125
Cluster Vserver Id = 4294967293
Ping status:....
Basic connectivity succeeds on 4 path(s)
Basic connectivity fails on 0 path(s)
................
Detected 9000 byte MTU on 4 path(s):
    Local 169.254.19.183 to Remote 169.254.209.69
    Local 169.254.19.183 to Remote 169.254.49.125
    Local 169.254.47.194 to Remote 169.254.209.69
    Local 169.254.47.194 to Remote 169.254.49.125
Larger than PMTU communication succeeds on 4 path(s)
RPC status:
2 paths up, 0 paths down (tcp check)
2 paths up, 0 paths down (udp check)
```

10. Change the privilege level back to admin:

```
set -privilege admin
```

11. If you suppressed automatic case creation, reenable it by invoking an AutoSupport message:

```
system node autosupport invoke -node * -type all -message MAINT=END
```

Show example

```
cluster1::*> system node autosupport invoke -node * -type all
-message MAINT=END
```

For more information, see: NetApp KB Article: How to suppress automatic case creation during scheduled maintenance windows

What's next?

After you've migrated your switches, you can configure switch health monitoring.

Replace the switches

Replacement requirements

Before replacing the switch, make sure the following conditions are met in the current environment and on the replacement switch.

Existing cluster and network infrastructure

Make sure that:

- The existing cluster is verified as completely functional, with at least one fully connected cluster switch.
- All cluster ports are **up**.
- All cluster logical interfaces (LIFs) are administratively and operationally **up** and on their home ports.
- The ONTAP `cluster ping-cluster -node node1` command must indicate that the settings, `basic connectivity` and `larger than PMTU communication`, are successful on all paths.

BES-53248 replacement cluster switch

Make sure that:

- Management network connectivity on the replacement switch is functional.
- Console access to the replacement switch is in place.
- The node connections are ports 0/1 through 0/16 with default licensing.
- All Inter-Switch Link (ISL) ports are disabled on ports 0/55 and 0/56.
- The desired reference configuration file (RCF) and EFOS operating system switch image are loaded onto the switch.
- Initial customization of the switch is complete, as detailed in Configure the BES-53248 cluster switch.

Any previous site customizations, such as STP, SNMP, and SSH, are copied to the new switch.

Enable console logging

NetApp strongly recommends that you enable console logging on the devices that you are using and take the following actions when replacing your switch:

- Leave AutoSupport enabled during maintenance.
- Trigger a maintenance AutoSupport before and after maintenance to disable case creation for the duration of the maintenance. See this Knowledge Base article SU92: How to suppress automatic case creation during scheduled maintenance windows for further details.
- Enable session logging for any CLI sessions. For instructions on how to enable session logging, review the "Logging Session Output" section in this Knowledge Base article How to configure PuTTY for optimal connectivity to ONTAP systems.

For more information

- NetApp Support Site
- NetApp Hardware Universe

Replace a Broadcom-supported BES-53248 cluster switch

Follow these steps to replace a defective Broadcom-supported BES-53248 cluster switch in a cluster network. This is a nondisruptive procedure (NDU).

About the examples

The examples in this procedure use the following switch and node nomenclature:

- The names of the existing BES-53248 switches are `cs1` and `cs2`.
- The name of the new BES-53248 switch is `newcs2`.
- The node names are `node1` and `node2`.
- The cluster ports on each node are named `e0a` and `e0b`.
- The cluster LIF names are `node1_clus1` and `node1_clus2` for node1, and `node2_clus1` and `node2_clus2` for node2.
- The prompt for changes to all cluster nodes is `cluster1::>`

About the topology

This procedure is based on the following cluster network topology:

Show example topology

```
cluster1::> network port show -ipspace Cluster

Node: node1

Ignore
                                                  Speed(Mbps) Health
Health
Port      IPspace      Broadcast Domain Link MTU  Admin/Oper  Status
Status
--------- ------------ ---------------- ---- ---- ----------- --------
------
e0a       Cluster      Cluster          up   9000  auto/10000 healthy
false
e0b       Cluster      Cluster          up   9000  auto/10000 healthy
false


Node: node2

Ignore
                                                  Speed(Mbps) Health
Health
Port      IPspace      Broadcast Domain Link MTU  Admin/Oper  Status
Status
--------- ------------ ---------------- ---- ---- ----------- --------
------
e0a       Cluster      Cluster          up   9000  auto/10000 healthy
false
e0b       Cluster      Cluster          up   9000  auto/10000 healthy
false


cluster1::> network interface show -vserver Cluster
            Logical    Status     Network            Current
Current Is
Vserver     Interface  Admin/Oper Address/Mask       Node          Port
Home
----------- ---------- ---------- ------------------ -------------
------- ----
Cluster
            node1_clus1  up/up    169.254.209.69/16  node1         e0a
true
            node1_clus2  up/up    169.254.49.125/16  node1         e0b
true
```

```
            node2_clus1  up/up    169.254.47.194/16  node2         e0a
true
            node2_clus2  up/up    169.254.19.183/16  node2         e0b
true


cluster1::> network device-discovery show -protocol cdp
Node/       Local  Discovered
Protocol    Port   Device (LLDP: ChassisID)  Interface         Platform
----------- ------ ------------------------- ----------------
----------------
node2      /cdp
            e0a    cs1                       0/2               BES-
53248
            e0b    cs2                       0/2               BES-
53248
node1      /cdp
            e0a    cs1                       0/1               BES-
53248
            e0b    cs2                       0/1               BES-
53248
```

```
(cs1)# show isdp neighbors

Capability Codes: R - Router, T - Trans Bridge, B - Source Route
Bridge,
                  S - Switch, H - Host, I - IGMP, r - Repeater

Device ID               Intf      Holdtime  Capability Platform
Port ID
----------------------- --------- --------- ----------
--------------- ---------
node1                   0/1       175       H          FAS2750
e0a
node2                   0/2       152       H          FAS2750
e0a
cs2                     0/55      179       R          BES-53248
0/55
cs2                     0/56      179       R          BES-53248
0/56


(cs2)# show isdp neighbors

Capability Codes: R - Router, T - Trans Bridge, B - Source Route
Bridge,
                  S - Switch, H - Host, I - IGMP, r - Repeater

Device ID               Intf      Holdtime  Capability Platform
Port ID
----------------------- --------- --------- ----------
--------------- ---------
node1                   0/1       129       H          FAS2750
e0b
node2                   0/2       165       H          FAS2750
e0b
cs1                     0/55      179       R          BES-53248
0/55
cs1                     0/56      179       R          BES-53248
0/56
```

Steps

1. Review the Replacement requirements.
2. If AutoSupport is enabled on this cluster, suppress automatic case creation by invoking an AutoSupport message:

```
system node autosupport invoke -node * -type all -message MAINT=xh
```

where *x* is the duration of the maintenance window in hours.

> The AutoSupport message notifies technical support of this maintenance task so that automatic case creation is suppressed during the maintenance window.

3. Install the appropriate Reference Configuration File (RCF) and image on the switch, newcs2, and make any necessary site preparations.

   If necessary, verify, download, and install the appropriate versions of the RCF and EFOS software for the new switch. If you have verified that the new switch is correctly set up and does not need updates to the RCF and EFOS software, continue to step 2.

   a. You can download the applicable Broadcom EFOS software for your cluster switches from the Broadcom Ethernet Switch Support site. Follow the steps on the Download page to download the EFOS file for the version of ONTAP software you are installing.

   b. The appropriate RCF is available from the Broadcom Cluster Switches page. Follow the steps on the Download page to download the correct RCF for the version of ONTAP software you are installing.

4. On the new switch, log in as `admin` and shut down all of the ports that will be connected to the node cluster interfaces (ports 1 to 16).

   > If you purchased additional licenses for additional ports, shut down these ports too.

   If the switch that you are replacing is not functional and is powered down, the LIFs on the cluster nodes should have already failed over to the other cluster port for each node.

   > No password is required to enter `enable` mode.

   Show example

   ```
   User: admin
   Password:
   (newcs2)> enable
   (newcs2)# config
   (newcs2)(config)# interface 0/1-0/16
   (newcs2)(interface 0/1-0/16)# shutdown
   (newcs2)(interface 0/1-0/16)# exit
   (newcs2)(config)# exit
   (newcs2)#
   ```

5. Verify that all cluster LIFs have `auto-revert` enabled:

   ```
   network interface show -vserver Cluster -fields auto-revert
   ```

Show example topology

```
cluster1::> network interface show -vserver Cluster -fields auto-
revert

Logical
Vserver   Interface    Auto-revert
--------- ------------ ------------
Cluster   node1_clus1  true
Cluster   node1_clus2  true
Cluster   node2_clus1  true
Cluster   node2_clus2  true
```

6. Shut down the ISL ports 0/55 and 0/56 on the BES-53248 switch cs1:

Show example topology

```
(cs1)# config
(cs1)(config)# interface 0/55-0/56
(cs1)(interface 0/55-0/56)# shutdown
```

7. Remove all cables from the BES-53248 cs2 switch, and then connect them to the same ports on the BES-53248 newcs2 switch.
8. Bring up the ISLs ports 0/55 and 0/56 between the cs1 and newcs2 switches, and then verify the port channel operation status.

   The Link State for port-channel 1/1 should be **up** and all member ports should be True under the Port Active heading.

Show example

This example enables ISL ports 0/55 and 0/56 and displays the Link State for port-channel 1/1 on switch cs1:

```
(cs1)# config
(cs1)(config)# interface 0/55-0/56
(cs1)(interface 0/55-0/56)# no shutdown
(cs1)(interface 0/55-0/56)# exit
(cs1)# show port-channel 1/1

Local Interface................................ 1/1
Channel Name................................... Cluster-ISL
Link State..................................... Up
Admin Mode..................................... Enabled
Type........................................... Dynamic
Port-channel Min-links......................... 1
Load Balance Option............................ 7
(Enhanced hashing mode)

Mbr    Device/       Port       Port
Ports  Timeout       Speed      Active
------ ------------- ---------- -------
0/55   actor/long    100G Full  True
       partner/long
0/56   actor/long    100G Full  True
       partner/long
```

9. On the new switch newcs2, re-enable all of the ports that are connected to the node cluster interfaces (ports 1 to 16).

   If you purchased additional licenses for additional ports, shut down these ports too.

Show example

```
User:admin
Password:
(newcs2)> enable
(newcs2)# config
(newcs2)(config)# interface 0/1-0/16
(newcs2)(interface 0/1-0/16)# no shutdown
(newcs2)(interface 0/1-0/16)# exit
(newcs2)(config)# exit
```

10. Verify that port e0b is **up**:

    `network port show -ipspace Cluster`

    Show example

    The output should be similar to the following:

```
cluster1::> network port show -ipspace Cluster

Node: node1

Ignore
                                                  Speed(Mbps)
Health   Health
Port      IPspace      Broadcast Domain Link MTU   Admin/Oper
Status   Status
--------- ------------ ---------------- ---- ----- -----------
-------- -------
e0a       Cluster      Cluster          up   9000  auto/10000
healthy  false
e0b       Cluster      Cluster          up   9000  auto/10000
healthy  false

Node: node2

Ignore
                                                  Speed(Mbps)
Health   Health
Port      IPspace      Broadcast Domain Link MTU   Admin/Oper
Status   Status
--------- ------------ ---------------- ---- ----- -----------
-------- -------
e0a       Cluster      Cluster          up   9000  auto/10000
healthy  false
e0b       Cluster      Cluster          up   9000  auto/auto   -
false
```

11. On the same node as you used in the previous step, wait for the cluster LIF node1_clus2 on node1 to auto-revert.

Show example

In this example, LIF node1_clus2 on node1 is successfully reverted if `Is Home` is `true` and the port is e0b.

The following command displays information about the LIFs on both nodes. Bringing up the first node is successful if `Is Home` is `true` for both cluster interfaces and they show the correct port assignments, in this example `e0a` and `e0b` on node1.

```
cluster::> network interface show -vserver Cluster

            Logical      Status     Network            Current
Current Is
Vserver     Interface    Admin/Oper Address/Mask       Node
Port    Home
----------- ------------ ---------- ------------------ ----------
------- -----
Cluster
            node1_clus1  up/up      169.254.209.69/16  node1
e0a     true
            node1_clus2  up/up      169.254.49.125/16  node1
e0b     true
            node2_clus1  up/up      169.254.47.194/16  node2
e0a     true
            node2_clus2  up/up      169.254.19.183/16  node2
e0a     false
```

12. Display information about the nodes in a cluster:

    `cluster show`

    Show example

    This example shows that the node health for `node1` and `node2` in this cluster is `true`:

    ```
    cluster1::> cluster show
    Node   Health   Eligibility   Epsilon
    ------ -------- ------------  --------
    node1  true     true          true
    node2  true     true          true
    ```

13. Confirm the following cluster network configuration:

    `network port show`

```
network interface show
```

Show example

```
cluster1::> network port show -ipspace Cluster
Node: node1

Ignore
                                        Speed(Mbps)            Health
Health
Port      IPspace     Broadcast Domain Link MTU   Admin/Oper  Status
Status
--------- ----------- ---------------- ---- ----- -----------
-------- ------
e0a       Cluster     Cluster          up   9000  auto/10000
healthy  false
e0b       Cluster     Cluster          up   9000  auto/10000
healthy  false

Node: node2

Ignore
                                         Speed(Mbps)           Health
Health
Port      IPspace      Broadcast Domain Link MTU  Admin/Oper  Status
Status
--------- ------------ ---------------- ---- ---- -----------
-------- ------
e0a       Cluster      Cluster          up   9000 auto/10000
healthy  false
e0b       Cluster      Cluster          up   9000 auto/10000
healthy  false


cluster1::> network interface show -vserver Cluster

            Logical    Status     Network            Current
Current Is
Vserver     Interface  Admin/Oper Address/Mask       Node
Port    Home
----------- ---------- ---------- ------------------ -------------
------- ----
Cluster
            node1_clus1  up/up    169.254.209.69/16  node1
e0a     true
            node1_clus2  up/up    169.254.49.125/16  node1
e0b     true
            node2_clus1  up/up    169.254.47.194/16  node2
```

```
e0a     true
            node2_clus2  up/up    169.254.19.183/16  node2
e0b     true
4 entries were displayed.
```

14. Verify that the cluster network is healthy:

```
show isdp neighbors
```

Show example

```
(cs1)# show isdp neighbors
Capability Codes: R - Router, T - Trans Bridge, B - Source Route
Bridge,
S - Switch, H - Host, I - IGMP, r - Repeater
Device ID    Intf    Holdtime    Capability    Platform    Port ID
---------    ----    --------    ----------    --------    --------
node1        0/1     175         H             FAS2750     e0a
node2        0/2     152         H             FAS2750     e0a
newcs2       0/55    179         R             BES-53248   0/55
newcs2       0/56    179         R             BES-53248   0/56

(newcs2)# show isdp neighbors
Capability Codes: R - Router, T - Trans Bridge, B - Source Route
Bridge,
S - Switch, H - Host, I - IGMP, r - Repeater

Device ID    Intf    Holdtime    Capability    Platform    Port ID
---------    ----    --------    ----------    --------    --------
node1        0/1     129         H             FAS2750     e0b
node2        0/2     165         H             FAS2750     e0b
cs1          0/55    179         R             BES-53248   0/55
cs1          0/56    179         R             BES-53248   0/56
```

15. If you suppressed automatic case creation, re-enable it by invoking an AutoSupport message:

```
system node autosupport invoke -node * -type all -message MAINT=END
```

What's next?

After you've replaced your switches, you can configure switch health monitoring.

Replace Broadcom BES-53248 cluster switches with switchless connections

You can migrate from a cluster with a switched cluster network to one where two nodes

are directly connected for ONTAP 9.3 and later.

Review requirements

Guidelines

Review the following guidelines:

- Migrating to a two-node switchless cluster configuration is a nondisruptive operation. Most systems have two dedicated cluster interconnect ports on each node, but you can also use this procedure for systems with a larger number of dedicated cluster interconnect ports on each node, such as four, six or eight.
- You cannot use the switchless cluster interconnect feature with more than two nodes.
- If you have an existing two-node cluster that uses cluster interconnect switches and is running ONTAP 9.3 or later, you can replace the switches with direct, back-to-back connections between the nodes.

Before you begin

Make sure you have the following:

- A healthy cluster that consists of two nodes connected by cluster switches. The nodes must be running the same ONTAP release.
- Each node with the required number of dedicated cluster ports, which provide redundant cluster interconnect connections to support your system configuration. For example, there are two redundant ports for a system with two dedicated cluster interconnect ports on each node.

Migrate the switches

About this task

The following procedure removes the cluster switches in a two-node cluster and replaces each connection to the switch with a direct connection to the partner node.

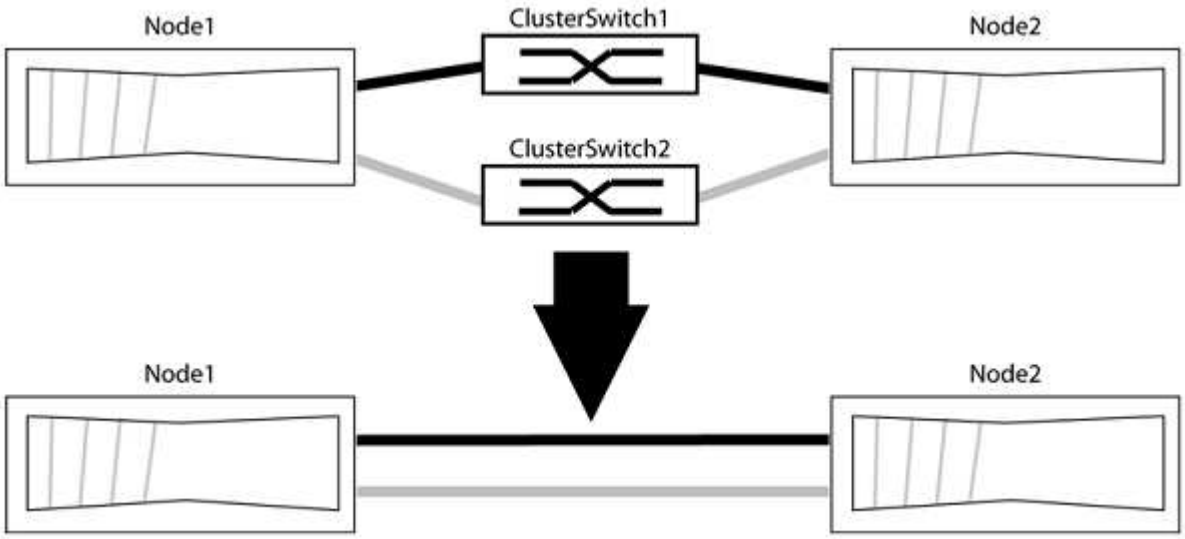

About the examples

The examples in the following procedure show nodes that are using "e0a" and "e0b" as cluster ports. Your nodes might be using different cluster ports as they vary by system.

Step 1: Prepare for migration

1. Change the privilege level to advanced, entering `y` when prompted to continue:

   ```
   set -privilege advanced
   ```

   The advanced prompt `*>` appears.

2. ONTAP 9.3 and later supports automatic detection of switchless clusters, which is enabled by default.

   You can verify that detection of switchless clusters is enabled by running the advanced privilege command:

   ```
   network options detect-switchless-cluster show
   ```

   Show example

   The following example output shows if the option is enabled.

   ```
   cluster::*> network options detect-switchless-cluster show
      (network options detect-switchless-cluster show)
   Enable Switchless Cluster Detection: true
   ```

   If "Enable Switchless Cluster Detection" is `false`, contact NetApp support.

3. If AutoSupport is enabled on this cluster, suppress automatic case creation by invoking an AutoSupport message:

   ```
   system node autosupport invoke -node * -type all -message
   MAINT=<number_of_hours>h
   ```

   where `h` is the duration of the maintenance window in hours. The message notifies technical support of this maintenance task so that they can suppress automatic case creation during the maintenance window.

   In the following example, the command suppresses automatic case creation for two hours:

   Show example

   ```
   cluster::*> system node autosupport invoke -node * -type all
   -message MAINT=2h
   ```

Step 2: Configure ports and cabling

1. Organize the cluster ports on each switch into groups so that the cluster ports in group1 go to cluster switch1 and the cluster ports in group2 go to cluster switch2. These groups are required later in the procedure.
2. Identify the cluster ports and verify link status and health:

```
network port show -ipspace Cluster
```

In the following example for nodes with cluster ports "e0a" and "e0b", one group is identified as “node1:e0a” and “node2:e0a” and the other group as “node1:e0b” and “node2:e0b”. Your nodes might be using different cluster ports because they vary by system.

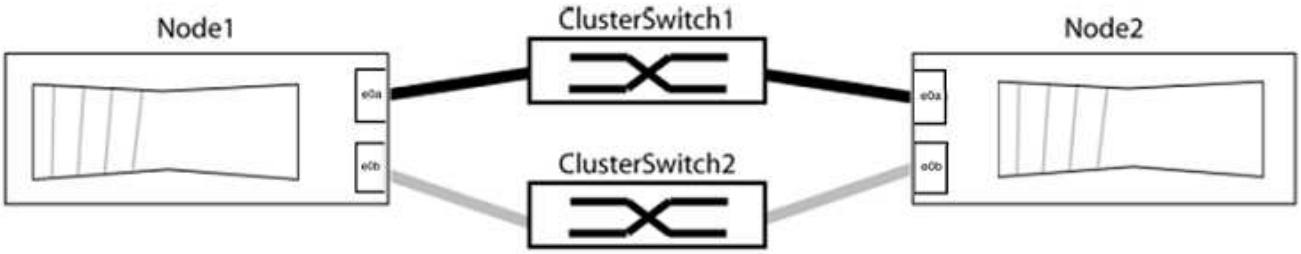

Verify that the ports have a value of `up` for the “Link” column and a value of `healthy` for the “Health Status” column.

Show example

```
cluster::> network port show -ipspace Cluster
Node: node1

Ignore
                                             Speed(Mbps) Health
Health
Port  IPspace   Broadcast Domain Link  MTU   Admin/Oper  Status
Status
----- --------- ---------------- ----- ----- ----------- -------
-------
e0a   Cluster   Cluster          up    9000  auto/10000  healthy
false
e0b   Cluster   Cluster          up    9000  auto/10000  healthy
false

Node: node2

Ignore
                                             Speed(Mbps) Health
Health
Port  IPspace   Broadcast Domain Link  MTU   Admin/Oper  Status
Status
----- --------- ---------------- ----- ----- ----------- -------
-------
e0a   Cluster   Cluster          up    9000  auto/10000  healthy
false
e0b   Cluster   Cluster          up    9000  auto/10000  healthy
false
4 entries were displayed.
```

3. Confirm that all the cluster LIFs are on their home ports.

   Verify that the “is-home” column is `true` for each of the cluster LIFs:

   `network interface show -vserver Cluster -fields is-home`

Show example

```
cluster::*> net int show -vserver Cluster -fields is-home
(network interface show)
vserver  lif          is-home
-------- ------------ --------
Cluster  node1_clus1  true
Cluster  node1_clus2  true
Cluster  node2_clus1  true
Cluster  node2_clus2  true
4 entries were displayed.
```

If there are cluster LIFs that are not on their home ports, revert those LIFs to their home ports:

```
network interface revert -vserver Cluster -lif *
```

4. Disable auto-revert for the cluster LIFs:

```
network interface modify -vserver Cluster -lif * -auto-revert false
```

5. Verify that all ports listed in the previous step are connected to a network switch:

```
network device-discovery show -port cluster_port
```

The “Discovered Device” column should be the name of the cluster switch that the port is connected to.

Show example

The following example shows that cluster ports "e0a" and "e0b" are correctly connected to cluster switches "cs1" and "cs2".

```
cluster::> network device-discovery show -port e0a|e0b
  (network device-discovery show)
Node/     Local  Discovered
Protocol  Port   Device (LLDP: ChassisID)  Interface  Platform
--------- ------ ------------------------- ---------- ----------
node1/cdp
          e0a    cs1                       0/11       BES-53248
          e0b    cs2                       0/12       BES-53248
node2/cdp
          e0a    cs1                       0/9        BES-53248
          e0b    cs2                       0/9        BES-53248
4 entries were displayed.
```

6. Verify the connectivity of the remote cluster interfaces:

ONTAP 9.9.1 and later

You can use the `network interface check cluster-connectivity` command to start an accessibility check for cluster connectivity and then display the details:

`network interface check cluster-connectivity start` and `network interface check cluster-connectivity show`

```
cluster1::*> network interface check cluster-connectivity start
```

NOTE: Wait for a number of seconds before running the `show` command to display the details.

```
cluster1::*> network interface check cluster-connectivity show
                                  Source           Destination
Packet
Node   Date                       LIF              LIF
Loss
------ ------------------------- ---------------- ----------------
-----------
node1
       3/5/2022 19:21:18 -06:00   node1_clus2      node2-clus1
none
       3/5/2022 19:21:20 -06:00   node1_clus2      node2_clus2
none
node2
       3/5/2022 19:21:18 -06:00   node2_clus2      node1_clus1
none
       3/5/2022 19:21:20 -06:00   node2_clus2      node1_clus2
none
```

All ONTAP releases

For all ONTAP releases, you can also use the `cluster ping-cluster -node <name>` command to check the connectivity:

```
cluster ping-cluster -node <name>
```

```
cluster1::*> cluster ping-cluster -node local
Host is node2
Getting addresses from network interface table...
Cluster node1_clus1 169.254.209.69 node1 e0a
Cluster node1_clus2 169.254.49.125 node1 e0b
Cluster node2_clus1 169.254.47.194 node2 e0a
Cluster node2_clus2 169.254.19.183 node2 e0b
Local = 169.254.47.194 169.254.19.183
Remote = 169.254.209.69 169.254.49.125
Cluster Vserver Id = 4294967293
Ping status:

Basic connectivity succeeds on 4 path(s)
Basic connectivity fails on 0 path(s)

Detected 9000 byte MTU on 4 path(s):
Local 169.254.47.194 to Remote 169.254.209.69
Local 169.254.47.194 to Remote 169.254.49.125
Local 169.254.19.183 to Remote 169.254.209.69
Local 169.254.19.183 to Remote 169.254.49.125
Larger than PMTU communication succeeds on 4 path(s)
RPC status:
2 paths up, 0 paths down (tcp check)
2 paths up, 0 paths down (udp check)
```

7. Verify that the cluster is healthy:

   ```
   cluster ring show
   ```

   All units must be either master or secondary.

8. Set up the switchless configuration for the ports in group 1.

   To avoid potential networking issues, you must disconnect the ports from group1 and reconnect them back-to-back as quickly as possible, for example, **in less than 20 seconds**.

   a. Disconnect all the cables from the ports in group1 at the same time.

      In the following example, the cables are disconnected from port "e0a" on each node, and cluster traffic continues through the switch and port "e0b" on each node:

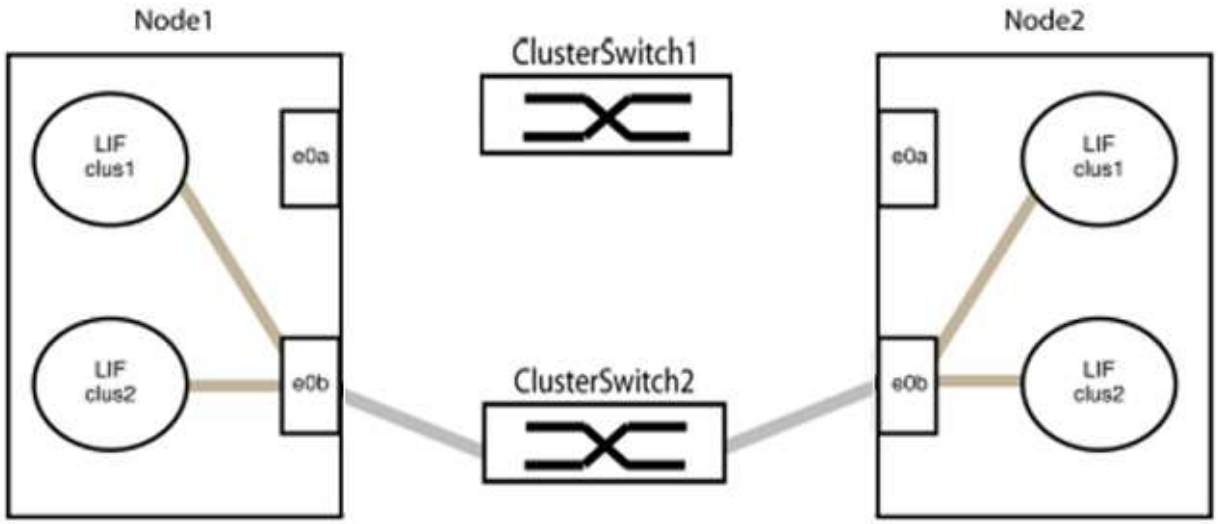

b. Cable the ports in group1 back-to-back.

In the following example, "e0a" on node1 is connected to "e0a" on node2:

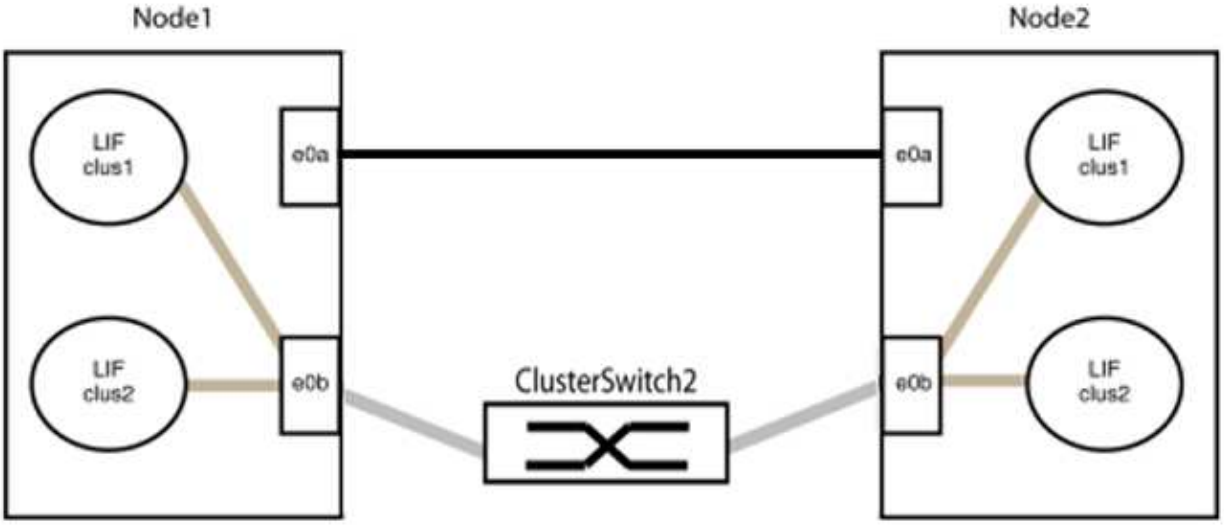

9. The switchless cluster network option transitions from `false` to `true`. This might take up to 45 seconds. Confirm that the switchless option is set to `true`:

`network options switchless-cluster show`

The following example shows that the switchless cluster is enabled:

```
cluster::*> network options switchless-cluster show
Enable Switchless Cluster: true
```

10. Verify the connectivity of the remote cluster interfaces:

ONTAP 9.9.1 and later

You can use the `network interface check cluster-connectivity` command to start an accessibility check for cluster connectivity and then display the details:

`network interface check cluster-connectivity start` and `network interface check cluster-connectivity show`

```
cluster1::*> network interface check cluster-connectivity start
```

NOTE: Wait for a number of seconds before running the `show` command to display the details.

```
cluster1::*> network interface check cluster-connectivity show
                                  Source           Destination
Packet
Node   Date                       LIF              LIF
Loss
------ -------------------------- ---------------- ----------------
-----------
node1
       3/5/2022 19:21:18 -06:00   node1_clus2      node2-clus1
none
       3/5/2022 19:21:20 -06:00   node1_clus2      node2_clus2
none
node2
       3/5/2022 19:21:18 -06:00   node2_clus2      node1_clus1
none
       3/5/2022 19:21:20 -06:00   node2_clus2      node1_clus2
none
```

All ONTAP releases

For all ONTAP releases, you can also use the `cluster ping-cluster -node <name>` command to check the connectivity:

```
cluster ping-cluster -node <name>
```

```
cluster1::*> cluster ping-cluster -node local
Host is node2
Getting addresses from network interface table...
Cluster node1_clus1 169.254.209.69 node1 e0a
Cluster node1_clus2 169.254.49.125 node1 e0b
Cluster node2_clus1 169.254.47.194 node2 e0a
Cluster node2_clus2 169.254.19.183 node2 e0b
Local = 169.254.47.194 169.254.19.183
Remote = 169.254.209.69 169.254.49.125
Cluster Vserver Id = 4294967293
Ping status:

Basic connectivity succeeds on 4 path(s)
Basic connectivity fails on 0 path(s)

Detected 9000 byte MTU on 4 path(s):
Local 169.254.47.194 to Remote 169.254.209.69
Local 169.254.47.194 to Remote 169.254.49.125
Local 169.254.19.183 to Remote 169.254.209.69
Local 169.254.19.183 to Remote 169.254.49.125
Larger than PMTU communication succeeds on 4 path(s)
RPC status:
2 paths up, 0 paths down (tcp check)
2 paths up, 0 paths down (udp check)
```

Before proceeding to the next step, you must wait at least two minutes to confirm a working back-to-back connection on group 1.

11. Set up the switchless configuration for the ports in group 2.

To avoid potential networking issues, you must disconnect the ports from group2 and reconnect them back-to-back as quickly as possible, for example, **in less than 20 seconds**.

a. Disconnect all the cables from the ports in group2 at the same time.

In the following example, the cables are disconnected from port "e0b" on each node, and cluster traffic continues through the direct connection between the "e0a" ports:

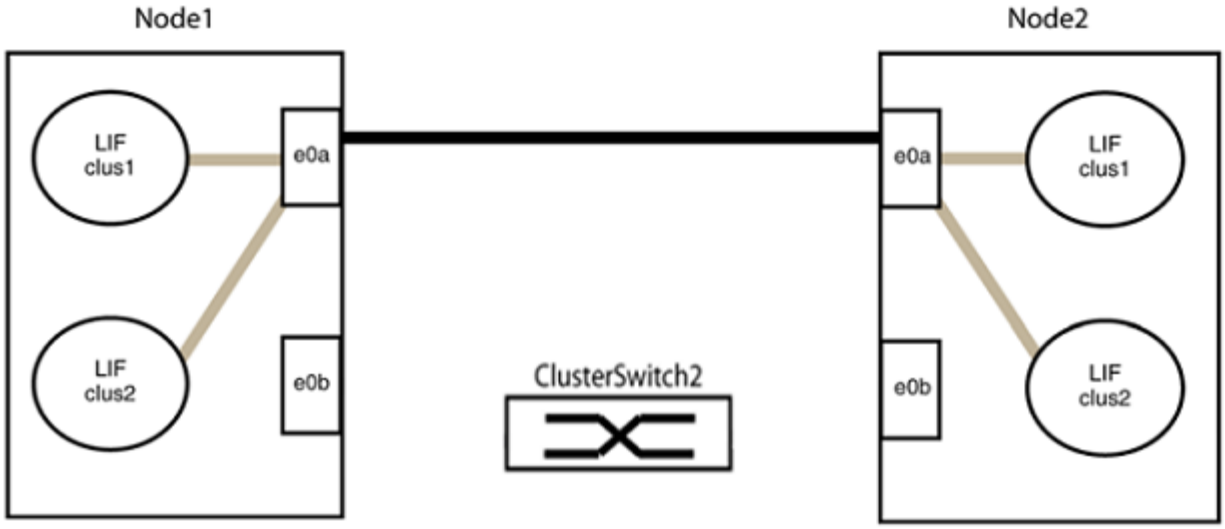

b. Cable the ports in group2 back-to-back.

   In the following example, "e0a" on node1 is connected to "e0a" on node2 and "e0b" on node1 is connected to "e0b" on node2:

Step 3: Verify the configuration

1. Verify that the ports on both nodes are correctly connected:

   `network device-discovery show -port` *`cluster_port`*

Show example

The following example shows that cluster ports "e0a" and "e0b" are correctly connected to the corresponding port on the cluster partner:

```
cluster::> net device-discovery show -port e0a|e0b
  (network device-discovery show)
Node/      Local  Discovered
Protocol   Port   Device (LLDP: ChassisID)  Interface  Platform
---------- ------ ------------------------- ---------- ----------
node1/cdp
           e0a    node2                     e0a        AFF-A300
           e0b    node2                     e0b        AFF-A300
node1/lldp
           e0a    node2 (00:a0:98:da:16:44) e0a        -
           e0b    node2 (00:a0:98:da:16:44) e0b        -
node2/cdp
           e0a    node1                     e0a        AFF-A300
           e0b    node1                     e0b        AFF-A300
node2/lldp
           e0a    node1 (00:a0:98:da:87:49) e0a        -
           e0b    node1 (00:a0:98:da:87:49) e0b        -
8 entries were displayed.
```

2. Re-enable auto-revert for the cluster LIFs:

   `network interface modify -vserver Cluster -lif * -auto-revert true`

3. Verify that all LIFs are home. This might take a few seconds.

   `network interface show -vserver Cluster -lif` *`lif_name`*

Show example

The LIFs have been reverted if the “Is Home” column is `true`, as shown for `node1_clus2` and `node2_clus2` in the following example:

```
cluster::> network interface show -vserver Cluster -fields curr-
port,is-home
vserver  lif           curr-port is-home
-------- ------------- --------- -------
Cluster  node1_clus1   e0a       true
Cluster  node1_clus2   e0b       true
Cluster  node2_clus1   e0a       true
Cluster  node2_clus2   e0b       true
4 entries were displayed.
```

If any cluster LIFS have not returned to their home ports, revert them manually from the local node:

`network interface revert -vserver Cluster -lif` *`lif_name`*

4. Check the cluster status of the nodes from the system console of either node:

   `cluster show`

   Show example

   The following example shows epsilon on both nodes to be `false`:

   ```
   Node  Health  Eligibility Epsilon
   ----- ------- ----------- --------
   node1 true    true        false
   node2 true    true        false
   2 entries were displayed.
   ```

5. Verify the connectivity of the remote cluster interfaces:

ONTAP 9.9.1 and later

You can use the `network interface check cluster-connectivity` command to start an accessibility check for cluster connectivity and then display the details:

`network interface check cluster-connectivity start` and `network interface check cluster-connectivity show`

```
cluster1::*> network interface check cluster-connectivity start
```

NOTE: Wait for a number of seconds before running the `show` command to display the details.

```
cluster1::*> network interface check cluster-connectivity show
                                  Source           Destination
Packet
Node   Date                       LIF              LIF
Loss
------ -------------------------- ---------------- ----------------
-----------
node1
       3/5/2022 19:21:18 -06:00   node1_clus2      node2-clus1
none
       3/5/2022 19:21:20 -06:00   node1_clus2      node2_clus2
none
node2
       3/5/2022 19:21:18 -06:00   node2_clus2      node1_clus1
none
       3/5/2022 19:21:20 -06:00   node2_clus2      node1_clus2
none
```

All ONTAP releases

For all ONTAP releases, you can also use the `cluster ping-cluster -node <name>` command to check the connectivity:

```
cluster ping-cluster -node <name>
```

```
cluster1::*> cluster ping-cluster -node local
Host is node2
Getting addresses from network interface table...
Cluster node1_clus1 169.254.209.69 node1 e0a
Cluster node1_clus2 169.254.49.125 node1 e0b
Cluster node2_clus1 169.254.47.194 node2 e0a
Cluster node2_clus2 169.254.19.183 node2 e0b
Local = 169.254.47.194 169.254.19.183
Remote = 169.254.209.69 169.254.49.125
Cluster Vserver Id = 4294967293
Ping status:

Basic connectivity succeeds on 4 path(s)
Basic connectivity fails on 0 path(s)

Detected 9000 byte MTU on 4 path(s):
Local 169.254.47.194 to Remote 169.254.209.69
Local 169.254.47.194 to Remote 169.254.49.125
Local 169.254.19.183 to Remote 169.254.209.69
Local 169.254.19.183 to Remote 169.254.49.125
Larger than PMTU communication succeeds on 4 path(s)
RPC status:
2 paths up, 0 paths down (tcp check)
2 paths up, 0 paths down (udp check)
```

6. If you suppressed automatic case creation, reenable it by invoking an AutoSupport message:

   ```
   system node autosupport invoke -node * -type all -message MAINT=END
   ```

   For more information, see NetApp KB Article 1010449: How to suppress automatic case creation during scheduled maintenance windows.

7. Change the privilege level back to admin:

   ```
   set -privilege admin
   ```

What's next?

After you've replaced your switches, you can configure switch health monitoring.

Cisco Nexus 9336C-FX2 or 9336C-FX2-T

Get started

Installation and setup workflow for Cisco Nexus 9336C-FX2 and 9336C-FX2-T cluster switches

The Cisco Nexus 9336C-FX2 and 9336C-FX2-T cluster switches are part of the Cisco Nexus 9000 platform and can be installed in a NetApp system cabinet. Cluster switches allow you to build ONTAP clusters with more than two nodes.

Cisco Nexus 9336C-FX2 (36 ports) is high-port density cluster/storage/data switch. Cisco Nexus 9336C-FX2-T (12 ports) is a low-port-density, high performance switch that supports 10/25/40/100GbE cluster configurations.

Follow these workflow steps to install and setup your to Cisco 9336C-FX2 and 9336C-FX2-T switches.

Review the configuration requirements

Review the configuration requirements for the 9336C-FX2 and 9336C-FX2-T cluster switches.

Review the components and part numbers

Review the components and part numbers for the 9336C-FX2 and 9336C-FX2-T cluster switches.

Review the required documentation

Review specific switch and controller documentation to set up your 9336C-FX2 and 9336C-FX2-T switches and the ONTAP cluster.

Review the Smart Call Home requirements

Review the requirements for the Cisco Smart Call Home feature, used to monitor the hardware and software components on your network.

Install the hardware

Install the switch hardware.

Configure the software

Configure the switch software.

Configuration requirements for Cisco Nexus 9336C-FX2 and 9336C-FX2-T cluster switches

For Cisco Nexus 9336C-FX2 and 9336C-FX2-T switch installation and maintenance, make sure to review the configuration and network requirements.

ONTAP support

ONTAP 9.9.1 and later

From ONTAP 9.9.1, you can use Cisco Nexus 9336C-FX2 switches to combine storage and cluster functionality into a shared switch configuration.

If you want to build ONTAP clusters with more than two nodes, you need two supported network switches.

Ethernet switch health monitor does not support ONTAP 9.13.1P8 and earlier and 9.14.1P3 and earlier or NX-OS version 10.3(4a)(M).

ONTAP 9.10.1 and later

In addition, beginning with ONTAP 9.10.1, you can use Cisco Nexus 9336C-FX2-T switches to combine storage and cluster functionality into a shared switch configuration.

If you want to build ONTAP clusters with more than two nodes, you need two supported network switches.

Configuration requirements

Make sure that:

- You have the appropriate number and type of cables and cable connectors for your switches. See the Hardware Universe.
- Depending on the type of switch you are initially configuring, you need to connect to the switch console port with the included console cable.

Network requirements

You need the following network information for all switch configurations.

- IP subnet for management network traffic
- Host names and IP addresses for each of the storage system controllers and all applicable switches
- Most storage system controllers are managed through the e0M interface by connecting to the Ethernet service port (wrench icon). On AFF A800 and AFF A700s systems, the e0M interface uses a dedicated Ethernet port.
- Refer to the Hardware Universe for the latest information.

For more information about the initial configuration of your switch, see the following guide: Cisco Nexus 9336C-FX2 Installation and Upgrade Guide.

What's next

After you've reviewed the configuration requirements, you can confirm your components and part numbers.

Components and part numbers for Cisco Nexus 9336C-FX2 and 9336C-FX2-T cluster switches

For Cisco Nexus 9336C-FX2 and 9336C-FX2-T switch installation and maintenance, ensure to review the list of components and part numbers.

Part number details

The following table lists the part number and description for the 9336C-FX2 and 9336C-FX2-T switches, fans, and power supplies:

Part number	Description
X190200-CS-PE	Cluster Switch, N9336C 36Pt PTSX 10/25/40/100G
X190200-CS-PI	Cluster Switch, N9336C 36Pt PSIN 10/25/40/100G
X190212-CS-PE	Cluster Switch, N9336C 12Pt (9336C-FX2-T) PTSX 10/25/40/100G
X190212-CS-PI	Cluster Switch, N9336C 12Pt (9336C-FX2-T) PSIN 10/25/40/100G
SW-N9K-FX2-24P-UPG	SW, Cisco 9336CFX2 24-Port POD License
X190210-FE-PE	N9K-9336C, FTE, PTSX, 36PT 10/25/40/100GQSFP28
X190210-FE-PI	N9K-9336C, FTE, PSIN, 36PT 10/25/40/100GQSFP28
X190002	Accessory Kit X190001/X190003
X-NXA-PAC-1100W-PE2	N9K-9336C AC 1100W PSU - Port side exhaust airflow
X-NXA-PAC-1100W-PI2	N9K-9336C AC 1100W PSU - Port side Intake airflow
X-NXA-FAN-65CFM-PE	N9K-9336C 65CFM, Port side exhaust airflow
X-NXA-FAN-65CFM-PI	N9K-9336C 65CFM, Port side intake airflow

Cisco Smart licenses for 9336C-FX2-T ports only

In order to activate more than 12 ports on your Cisco Nexus 9336C-FX-T cluster switch, you must purchase a Cisco Smart license. Cisco Smart licenses are managed through Cisco Smart accounts.

1. Create a new Smart account, if required. See Create a new Smart account for details.
2. Request access to an existing Smart account. See Request access to an existing Smart account for details.

Once you have purchased your Smart license, install the appropriate RCF to enable and configure all 36 available ports for use.

What's next

After you've confirmed your components and part numbers, you can review the required documentation.

Documentation requirements for Cisco Nexus 9336C-FX2 and 9336C-FX2-T switches

For Cisco Nexus 9336C-FX2 and 9336C-FX2-T switches installation and maintenance, be sure to review specific switch and controller documentation to set up your Cisco 9336-FX2 switches and ONTAP cluster.

Switch documentation

To set up the Cisco Nexus 9336C-FX2 and 9336C-FX2-T switches, you need the following documentation from the Cisco Nexus 9000 Series Switches Support page:

Document title	Description
Nexus 9000 Series Hardware Installation Guide	Provides detailed information about site requirements, switch hardware details, and installation options.
Cisco Nexus 9000 Series Switch Software Configuration Guides (choose the guide for the NX-OS release installed on your switches)	Provides initial switch configuration information that you need before you can configure the switch for ONTAP operation.
Cisco Nexus 9000 Series NX-OS Software Upgrade and Downgrade Guide (choose the guide for the NX-OS release installed on your switches)	Provides information on how to downgrade the switch to ONTAP supported switch software, if necessary.
Cisco Nexus 9000 Series NX-OS Command Reference Master Index	Provides links to the various command references provided by Cisco.
Cisco Nexus 9000 MIBs Reference	Describes the Management Information Base (MIB) files for the Nexus 9000 switches.
Nexus 9000 Series NX-OS System Message Reference	Describes the system messages for Cisco Nexus 9000 series switches, those that are informational, and others that might help diagnose problems with links, internal hardware, or the system software.
Cisco Nexus 9000 Series NX-OS Release Notes (choose the notes for the NX-OS release installed on your switches)	Describes the features, bugs, and limitations for the Cisco Nexus 9000 Series.
Regulatory Compliance and Safety Information for Cisco Nexus 9000 Series	Provides international agency compliance, safety, and statutory information for the Nexus 9000 series switches.

ONTAP systems documentation

To set up an ONTAP system, you need the following documents for your version of the operating system from ONTAP 9.

Name	Description
Controller-specific *Installation and Setup Instructions*	Describes how to install NetApp hardware.

Name	Description
ONTAP documentation	Provides detailed information about all aspects of the ONTAP releases.
Hardware Universe	Provides NetApp hardware configuration and compatibility information.

Rail kit and cabinet documentation

To install a Cisco 9336-FX2 switch in a NetApp cabinet, see the following hardware documentation.

Name	Description
42U System Cabinet, Deep Guide	Describes the FRUs associated with the 42U system cabinet, and provides maintenance and FRU replacement instructions.
Install a Cisco 9336-FX2 switch in a NetApp Cabinet	Describes how to install Cisco Nexus 9336C-FX2 and 9336C-FX2-T switches in a four-post NetApp cabinet.

Smart Call Home requirements

To use Smart Call Home, you must configure a cluster network switch to communicate using email with the Smart Call Home system. In addition, you can optionally set up your cluster network switch to take advantage of Cisco's embedded Smart Call Home support feature.

Smart Call Home monitors the hardware and software components on your network. When a critical system configuration occurs, it generates an email-based notification and raises an alert to all the recipients that are configured in your destination profile.

Smart Call Home monitors the hardware and software components on your network. When a critical system configuration occurs, it generates an email-based notification and raises an alert to all the recipients that are configured in your destination profile.

Before you can use Smart Call Home, be aware of the following requirements:

- An email server must be in place.
- The switch must have IP connectivity to the email server.
- The contact name (SNMP server contact), phone number, and street address information must be configured. This is required to determine the origin of messages received.
- A CCO ID must be associated with an appropriate Cisco SMARTnet Service contract for your company.
- Cisco SMARTnet Service must be in place for the device to be registered.

The Cisco support site contains information about the commands to configure Smart Call Home.

Install the hardware

Hardware install workflow for Cisco Nexus 9336C-FX2 and 9336C-FX2-T switches

To install and configure the hardware for 9336C-FX2 and 9336C-FX2-T cluster switches,

follow these steps:

1. **Complete the cabling worksheet**

The sample cabling worksheet provides examples of recommended port assignments from the switches to the controllers. The blank worksheet provides a template that you can use in setting up your cluster.

2. **Install the switch**

Install the 9336C-FX2 and 9336C-FX2-T switches.

3. **Install the switch in a NetApp cabinet**

Install the 9336C-FX2 and 9336C-FX2-T switches and pass-through panel in a NetApp cabinet as required.

4. **Review cabling and configuration**

Review support for NVIDIA Ethernet ports, 25GbE FEC requirements, and information on TCAM resources.

Complete the Cisco Nexus 9336C-FX2 or 9336C-FX2-T cabling worksheet

If you want to document the supported platforms, download a PDF of this page and complete the cabling worksheet.

The sample cabling worksheet provides examples of recommended port assignments from the switches to the controllers. The blank worksheet provides a template that you can use in setting up your cluster.

- 9336C-FX2 sample cabling worksheet
- 9336C-FX2 blank cabling worksheet
- 9336C-FX2-T sample cabling worksheet (12-port)
- 9336C-FX2-T blank cabling worksheet (12-port)

9336C-FX2 sample cabling worksheet

The sample port definition on each pair of switches is as follows:

Cluster switch A		Cluster switch B	
Switch port	Node and port usage	Switch port	Node and port usage
1	4x10GbE node 1	1	4x10GbE node 1
2	4x10GbE node 2	2	4x10GbE node 2
3	4x10GbE node 3	3	4x10GbE node 3
4	4x25GbE node 4	4	4x25GbE node 4

Cluster switch A		Cluster switch B	
5	4x25GbE node 5	5	4x25GbE node 5
6	4x25GbE node 6	6	4x25GbE node 6
7	40/100GbE node 7	7	40/100GbE node 7
8	40/100GbE node 8	8	40/100GbE node 8
9	40/100GbE node 9	9	40/100GbE node 9
10	40/100GbE node 10	10	40/100GbE node 10
11	40/100GbE node 11	11	40/100GbE node 11
12	40/100GbE node 12	12	40/100GbE node 12
13	40/100GbE node 13	13	40/100GbE node 13
14	40/100GbE node 14	14	40/100GbE node 14
15	40/100GbE node 15	15	40/100GbE node 15
16	40/100GbE node 16	16	40/100GbE node 16
17	40/100GbE node 17	17	40/100GbE node 17
18	40/100GbE node 18	18	40/100GbE node 18
19	40/100GbE node 19	19	40/100GbE node 19
20	40/100GbE node 20	20	40/100GbE node 20
21	40/100GbE node 21	21	40/100GbE node 21
22	40/100GbE node 22	22	40/100GbE node 22
23	40/100GbE node 23	23	40/100GbE node 23
24	40/100GbE node 24	24	40/100GbE node 24
25 through 34	Reserved	25 through 34	Reserved

Cluster switch A		Cluster switch B	
35	100GbE ISL to switch B port 35	35	100GbE ISL to switch A port 35
36	100GbE ISL to switch B port 36	36	100GbE ISL to switch A port 36

9336C-FX2 blank cabling worksheet

You can use the blank cabling worksheet to document the platforms that are supported as nodes in a cluster. The *Supported Cluster Connections* section of the Hardware Universe defines the cluster ports used by the platform.

Cluster switch A		Cluster switch B	
1		1	
2		2	
3		3	
4		4	
5		5	
6		6	
7		7	
8		8	
9		9	
10		10	
11		11	
12		12	
13		13	
14		14	
15		15	

Cluster switch A		Cluster switch B	
16		16	
17		17	
18		18	
19		19	
20		20	
21		21	
22		22	
23		23	
24		24	
25 through 34	Reserved	25 through 34	Reserved
35	100GbE ISL to switch B port 35	35	100GbE ISL to switch A port 35
36	100GbE ISL to switch B port 36	36	100GbE ISL to switch A port 36

9336C-FX2-T sample cabling worksheet (12-port)

The sample port definition on each pair of switches is as follows:

Cluster switch A		Cluster switch B	
Switch port	Node and port usage	Switch port	Node and port usage
1	4x10GbE node 1	1	4x10GbE node 1
2	4x10GbE node 2	2	4x10GbE node 2
3	4x10GbE node 3	3	4x10GbE node 3
4	4x25GbE node 4	4	4x25GbE node 4
5	4x25GbE node 5	5	4x25GbE node 5
6	4x25GbE node 6	6	4x25GbE node 6

Cluster switch A		Cluster switch B	
7	40/100GbE node 7	7	40/100GbE node 7
8	40/100GbE node 8	8	40/100GbE node 8
9	40/100GbE node 9	9	40/100GbE node 9
10	40/100GbE node 10	10	40/100GbE node 10
11 through 34	Requires license	11 through 34	Requires license
35	100GbE ISL to switch B port 35	35	100GbE ISL to switch A port 35
36	100GbE ISL to switch B port 36	36	100GbE ISL to switch A port 36

9336C-FX2-T blank cabling worksheet (12-port)

You can use the blank cabling worksheet to document the platforms that are supported as nodes in a cluster. The *Supported Cluster Connections* section of the Hardware Universe defines the cluster ports used by the platform.

Cluster switch A		Cluster switch B	
1		1	
2		2	
3		3	
4		4	
5		5	
6		6	
7		7	
8		8	
9		9	
10		10	

Cluster switch A		Cluster switch B	
11 through 34	Requires license	11 through 34	Requires license
35	100GbE ISL to switch B port 35	35	100GbE ISL to switch A port 35
36	100GbE ISL to switch B port 36	36	100GbE ISL to switch A port 36

See the Hardware Universe for more information on switch ports.

What's next

After you've completed your cabling worksheets, you can install the switch.

Install 9336C-FX2 and 9336C-FX2-T cluster switches

Follow this procedure to set up and configure the Cisco Nexus 9336C-FX2 and 9336C-FX2-T switches.

Before you begin

Make sure you have the following:

- Access to an HTTP, FTP, or TFTP server at the installation site to download the applicable NX-OS and Reference Configuration File (RCF) releases.
- Applicable NX-OS version, downloaded from the Cisco Software Download page.
- Applicable licenses, network and configuration information, and cables.
- Completed cabling worksheets.
- Applicable NetApp cluster network and management network RCFs downloaded from the NetApp Support Site at mysupport.netapp.com. All Cisco cluster network and management network switches arrive with the standard Cisco factory-default configuration. These switches also have the current version of the NX-OS software but do not have the RCFs loaded.
- Required switch and ONTAP documentation.

Steps

1. Rack the cluster network and management network switches and controllers.

If you are installing the…	Then…
Cisco Nexus 9336C-FX2 in a NetApp system cabinet	See the *Installing a Cisco Nexus 9336C-FX2 cluster switch and pass-through panel in a NetApp cabinet* guide for instructions to install the switch in a NetApp cabinet.
Equipment in a Telco rack	See the procedures provided in the switch hardware installation guides and the NetApp installation and setup instructions.

2. Cable the cluster network and management network switches to the controllers using the completed cabling worksheets.

3. Power on the cluster network and management network switches and controllers.

What's next?

Optionally, you can install a Cisco Nexus 9336C-FX2 switch in a NetApp cabinet. Otherwise, go to review cabling and configuration.

Install Cisco Nexus 9336C-FX2 and 9336C-FX2-T switches in a NetApp cabinet

Depending on your configuration, you might need to install the Cisco Nexus 9336C-FX2 and 9336C-FX2-T switch and pass-through panel in a NetApp cabinet. Standard brackets are included with the switch.

Before you begin

Make sure you have the following:

- The pass-through panel kit, which is available from NetApp (part number X8784-R6).

  The NetApp pass-through panel kit contains the following hardware:

  - One pass-through blanking panel
  - Four 10-32 x .75 screws
  - Four 10-32 clip nuts
- For each switch, eight 10-32 or 12-24 screws and clip nuts to mount the brackets and slider rails to the front and rear cabinet posts.
- The Cisco standard rail kit to install the switch in a NetApp cabinet.

> The jumper cords are not included with the pass-through kit and should be included with your switches. If they were not shipped with the switches, you can order them from NetApp (part number X1558A-R6).

- For initial preparation requirements, kit contents, and safety precautions, see Cisco Nexus 9000 Series Hardware Installation Guide.

Steps

1. Install the pass-through blanking panel in the NetApp cabinet.
   a. Determine the vertical location of the switches and blanking panel in the cabinet.

      In this procedure, the blanking panel is installed in U40.

   b. Install two clip nuts on each side in the appropriate square holes for front cabinet rails.
   c. Center the panel vertically to prevent intrusion into adjacent rack space, and then tighten the screws.
   d. Insert the female connectors of both 48-inch jumper cords from the rear of the panel and through the brush assembly.

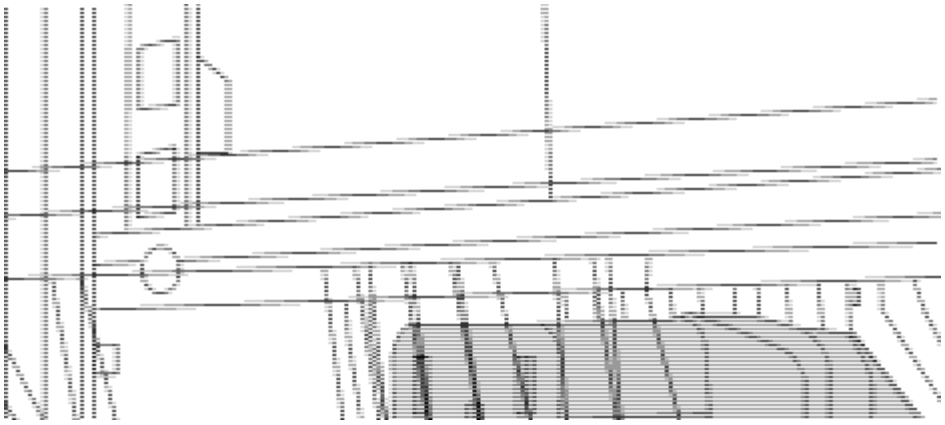

(1) Female connector of the jumper cord.

2. Install the rack-mount brackets on the Nexus 9336C-FX2 switch chassis.
   a. Position a front rack-mount bracket on one side of the switch chassis so that the mounting ear is aligned with the chassis faceplate (on the PSU or fan side), and then use four M4 screws to attach the bracket to the chassis.

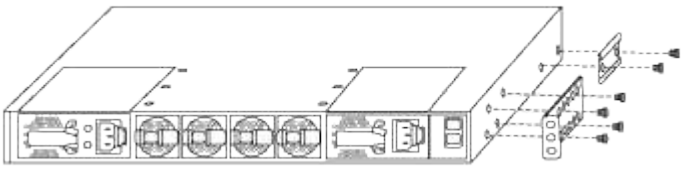

   b. Repeat step 2a with the other front rack-mount bracket on the other side of the switch.
   c. Install the rear rack-mount bracket on the switch chassis.
   d. Repeat step 2c with the other rear rack-mount bracket on the other side of the switch.
3. Install the clip nuts in the square hole locations for all four IEA posts.

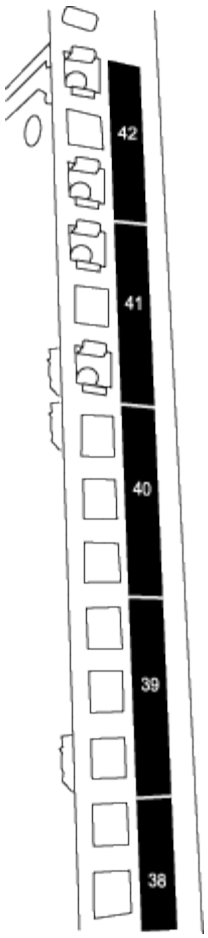

The two 9336C-FX2 and 9336C-FX2-T switches are always mounted in the top 2U of the cabinet RU41 and 42.

4. Install the slider rails in the cabinet.
   a. Position the first slider rail at the RU42 mark on the back side of the rear left post, insert screws with the matching thread type, and then tighten the screws with your fingers.

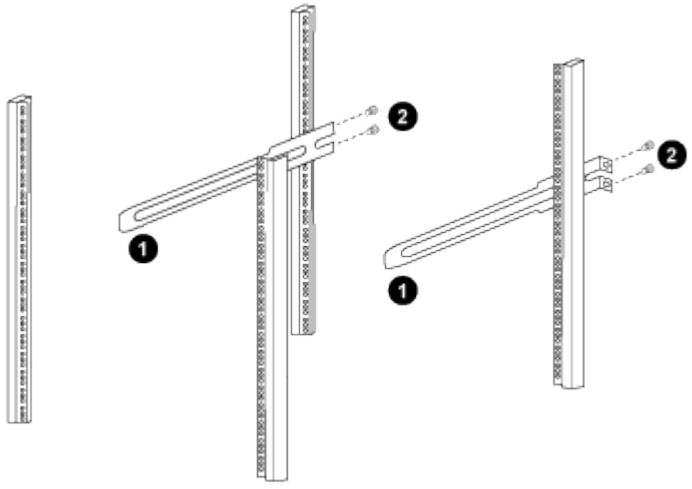

(1) As you gently slide the slider rail, align it to the screw holes in the rack.

(2) Tighten the screws of the slider rails to the cabinet posts.

b. Repeat step 4a for the right-side rear post.

c. Repeat steps 4a and 4b at the RU41 locations on the cabinet.

5. Install the switch in the cabinet.

> This step requires two people: one person to support the switch from the front and another to guide the switch into the rear slider rails.

a. Position the back of the switch at RU41.

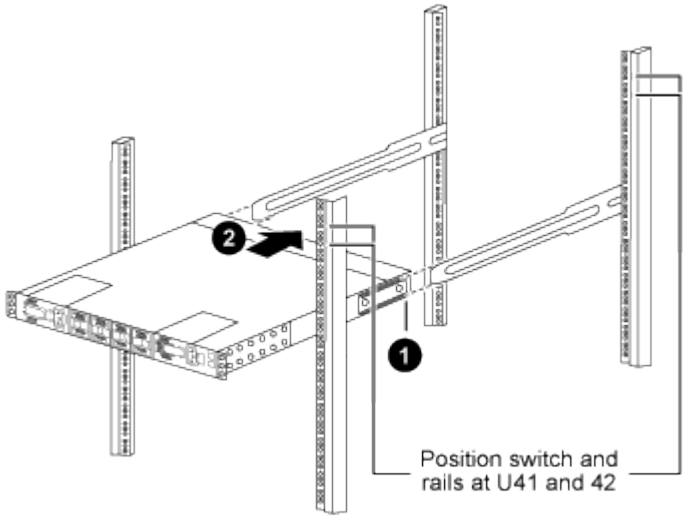

(1) As the chassis is pushed toward the rear posts, align the two rear rack-mount guides with the slider rails.

(2) Gently slide the switch until the front rack-mount brackets are flush with the front posts.

b. Attach the switch to the cabinet.

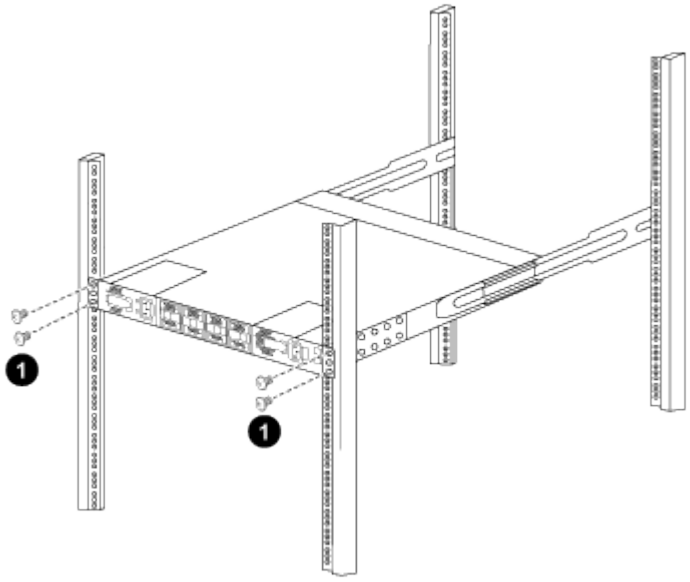

(1) With one person holding the front of the chassis level, the other person should fully tighten the four rear screws to the cabinet posts.

c. With the chassis now supported without assistance, fully tighten the front screws to the posts.

d. Repeat steps 5a through 5c for the second switch at the RU42 location.

> By using the fully installed switch as a support, it is not necessary to hold the front of the second switch during the installation process.

6. When the switches are installed, connect the jumper cords to the switch power inlets.
7. Connect the male plugs of both jumper cords to the closest available PDU outlets.

> To maintain redundancy, the two cords must be connected to different PDUs.

8. Connect the management port on each 9336C-FX2 and 9336C-FX2-T switches to either of the management switches (if ordered) or connect them directly to your management network.

   The management port is the upper-right port located on the PSU side of the switch. The CAT6 cable for each switch needs to be routed through the pass-through panel after the switches are installed to connect to the management switches or management network.

What's next?

After you've installed the switches in the NetApp cabinet, you can configure the Cisco Nexus 9336C-FX2 and 9336C-FX2-T switches.

Review cabling and configuration considerations

Before configuring your 9336C-FX2 and 9336C-FX2-T switches, review the following considerations.

Support for NVIDIA CX6, CX6-DX, and CX7 Ethernet ports

If connecting a switch port to an ONTAP controller using NVIDIA ConnectX-6 (CX6), ConnectX-6 Dx (CX6-DX), or ConnectX-7 (CX7) NIC ports, you must hard-code the switch port speed.

```
(cs1)(config)# interface Ethernet1/19
For 100GbE speed:
(cs1)(config-if)# speed 100000
For 40GbE speed:
(cs1)(config-if)# speed 40000
(cs1)(config-if)# no negotiate auto
(cs1)(config-if)# exit
(cs1)(config)# exit
Save the changes:
(cs1)# copy running-config startup-config
```

See the Hardware Universe for more information on switch ports. See What additional information do I need to install my equipment that is not in HWU? for more information about switch installation requirements.

25GbE FEC requirements

FAS2820 e0a/e0b ports

FAS2820 e0a and e0b ports require FEC configuration changes to link up with 9336C-FX2 and 9336C-FX2-T switch ports.
For switch ports e0a and e0b, the fec setting is set to `rs-cons16`.

```
(cs1)(config)# interface Ethernet1/8-9
(cs1)(config-if-range)# fec rs-cons16
(cs1)(config-if-range)# exit
(cs1)(config)# exit
Save the changes:
(cs1)# copy running-config startup-config
```

Ports do not link up due to TCAM resources

On the 9336C-FX2 and 9336C-FX2-T switches, the Ternary Content Addressable Memory (TCAM) resources configured in the configuration utilized by the switch are exhausted.

See the Knowledge Base article Ports do not link up on Cisco Nexus 9336C-FX2 due to TCAM resources for details on how to resolve this issue.

Configure the software

Software install workflow for Cisco Nexus 9336C-FX2 and 9336C-FX2-T cluster switches

To install and configure the software for Cisco Nexus 9336C-FX2 and 9336C-FX2-T switches and to install or upgrade the Reference Configuration File (RCF), follow these steps:

1. **Configure the switch**
   Configure the 9336C-FX2 and 9336C-FX2-T cluster switches.

2. **Prepare to install the NX-OS software and RCF**
   The Cisco NX-OS software and reference configuration files (RCFs) must be installed on Cisco 9336C-FX2 and 9336C-FX2-T cluster switches.

3. **Install or upgrade the NX-OS software**
   Download and install or upgrade the NX-OS software on the Cisco 9336C-FX2 and 9336C-FX2-T cluster switches.

4. **Install or upgrade the RCF**

Install or upgrade the RCF after setting up the Cisco 9336C-FX2 and 9336C-FX2-T switches for the first time. You can also use this procedure to upgrade your RCF version.

5 Verify SSH configuration

Verify that SSH is enabled on the switches to use the Ethernet Switch Health Monitor (CSHM) and log collection features.

6 Reset the switch to factory defaults

Erase the 9336C-FX2 and 9336C-FX2-T cluster switches settings.

Configure the 9336C-FX2 and 9336C-FX2-T cluster switches

Follow this procedure to configure the Cisco Nexus 9336C-FX2 and 9336C-FX2-T switches.

Before you begin

Make sure you have the following:

- Access to an HTTP, FTP, or TFTP server at the installation site to download the applicable NX-OS and Reference Configuration File (RCF) releases.
- Applicable NX-OS version, downloaded from the Cisco software download page.
- Applicable licenses, network and configuration information, and cables.
- Completed cabling worksheets.
- Applicable NetApp cluster network and management network RCFs downloaded from the NetApp Support Site at mysupport.netapp.com. All Cisco cluster network and management network switches arrive with the standard Cisco factory-default configuration. These switches also have the current version of the NX-OS software but do not have the RCFs loaded.
- Required switch and ONTAP documentation.

Steps

1. Perform an initial configuration of the cluster network switches.

   Provide applicable responses to the following initial setup questions when you first boot the switch. Your site's security policy defines the responses and services to enable.

Prompt	Response
Abort Auto Provisioning and continue with normal setup? (yes/no)	Respond with **yes**. The default is no.
Do you want to enforce secure password standard? (yes/no)	Respond with **yes**. The default is yes.
Enter the password for admin.	The default password is "admin"; you must create a new, strong password. A weak password can be rejected.

Prompt	Response
Would you like to enter the basic configuration dialog? (yes/no)	Respond with **yes** at the initial configuration of the switch.
Create another login account? (yes/no)	Your answer depends on your site's policies on alternate administrators. The default is **no**.
Configure read-only SNMP community string? (yes/no)	Respond with **no**. The default is no.
Configure read-write SNMP community string? (yes/no)	Respond with **no**. The default is no.
Enter the switch name.	Enter the switch name, which is limited to 63 alphanumeric characters.
Continue with Out-of-band (mgmt0) management configuration? (yes/no)	Respond with **yes** (the default) at that prompt. At the mgmt0 IPv4 address: prompt, enter your IP address: ip_address.
Configure the default-gateway? (yes/no)	Respond with **yes**. At the IPv4 address of the default-gateway: prompt, enter your default_gateway.
Configure advanced IP options? (yes/no)	Respond with **no**. The default is no.
Enable the telnet service? (yes/no)	Respond with **no**. The default is no.
Enabled SSH service? (yes/no)	Respond with **yes**. The default is yes. SSH is recommended when using Ethernet Switch Health Monitor (CSHM) for its log collection features. SSHv2 is also recommended for enhanced security.
Enter the type of SSH key you want to generate (dsa/rsa/rsa1).	The default is **rsa**.
Enter the number of key bits (1024-2048).	Enter the number of key bits from 1024 to 2048.
Configure the NTP server? (yes/no)	Respond with **no**. The default is no.
Configure default interface layer (L3/L2)	Respond with **L2**. The default is L2.

Prompt	Response
Configure default switch port interface state (shut/noshut)	Respond with **noshut**. The default is noshut.
Configure CoPP system profile (strict/moderate/lenient/dense)	Respond with **strict**. The default is strict.
Would you like to edit the configuration? (yes/no)	You should see the new configuration at this point. Review and make any necessary changes to the configuration you just entered. Respond with **no** at the prompt if you are satisfied with the configuration. Respond with **yes** if you want to edit your configuration settings.
Use this configuration and save it? (yes/no)	Respond with **yes** to save the configuration. This automatically updates the kickstart and system images. If you do not save the configuration at this stage, none of the changes will be in effect the next time you reboot the switch.

2. Verify the configuration choices you made in the display that appears at the end of the setup, and make sure that you save the configuration.
3. Check the version on the cluster network switches, and if necessary, download the NetApp-supported version of the software to the switches from the Cisco software download page.

What's next?

After you've configured your switches, you can prepare to install the NX-OS software and RCF.

Prepare to install NX-OS software and RCF

Before you install the NX-OS software and the Reference Configuration File (RCF), follow this procedure.

Suggested documentation

- Cisco Ethernet switch page

  Consult the switch compatibility table for the supported ONTAP and NX-OS versions.

- Software Upgrade and downgrade guides

  Refer to the appropriate software and upgrade guides available on the Cisco website for complete documentation on the Cisco switch upgrade and downgrade procedures.

- Cisco Nexus 9000 and 3000 Upgrade and ISSU Matrix

  Provides information on Disruptive Upgrade/Downgrade for Cisco NX-OS software on Nexus 9000 Series Switches based on your current and target releases.

  On the page, select **Disruptive Upgrade** and select your current release and target release from the dropdown list.

About the examples

The examples in this procedure use the following switch and node nomenclature:

- The names of the two Cisco switches are cs1 and cs2.
- The node names are cluster1-01 and cluster1-02.
- The cluster LIF names are cluster1-01_clus1 and cluster1-01_clus2 for cluster1-01 and cluster1-02_clus1 and cluster1-02_clus2 for cluster1-02.
- The `cluster1::*>` prompt indicates the name of the cluster.

About this task

The procedure requires the use of both ONTAP commands and Cisco Nexus 9000 Series Switches commands; ONTAP commands are used unless otherwise indicated.

Steps

1. If AutoSupport is enabled on this cluster, suppress automatic case creation by invoking an AutoSupport message: `system node autosupport invoke -node * -type all -message MAINT=x h`

   where x is the duration of the maintenance window in hours.

   > The AutoSupport message notifies technical support of this maintenance task so that automatic case creation is suppressed during the maintenance window.

2. Change the privilege level to advanced, entering **y** when prompted to continue:

   ```
   set -privilege advanced
   ```

   The advanced prompt (`*>`) appears.

3. Display how many cluster interconnect interfaces are configured in each node for each cluster interconnect switch:

   ```
   network device-discovery show -protocol cdp
   ```

Show example

```
cluster1::*> network device-discovery show -protocol cdp

Node/       Local  Discovered
Protocol    Port   Device (LLDP: ChassisID)  Interface
Platform
----------- ------ ------------------------- -----------------
--------
cluster1-02/cdp
            e0a    cs1                       Eth1/2            N9K-
C9336C
            e0b    cs2                       Eth1/2            N9K-
C9336C
cluster1-01/cdp
            e0a    cs1                       Eth1/1            N9K-
C9336C
            e0b    cs2                       Eth1/1            N9K-
C9336C

4 entries were displayed.
```

4. Check the administrative or operational status of each cluster interface.
   a. Display the network port attributes:

```
network port show -ipspace Cluster
```

Show example

```
cluster1::*> network port show -ipspace Cluster

Node: cluster1-02
                                                  Speed(Mbps)
Health
Port      IPspace      Broadcast Domain Link MTU  Admin/Oper
Status
--------- ------------ ---------------- ---- ---- -----------
------
e0a       Cluster      Cluster          up   9000  auto/10000
healthy
e0b       Cluster      Cluster          up   9000  auto/10000
healthy

Node: cluster1-01
                                                  Speed(Mbps)
Health
Port      IPspace      Broadcast Domain Link MTU  Admin/Oper
Status
--------- ------------ ---------------- ---- ---- -----------
------
e0a       Cluster      Cluster          up   9000  auto/10000
healthy
e0b       Cluster      Cluster          up   9000  auto/10000
healthy

4 entries were displayed.
```

b. Display information about the LIFs:

```
network interface show -vserver Cluster
```

Show example

```
cluster1::*> network interface show -vserver Cluster

            Logical            Status     Network
Current       Current Is
Vserver     Interface          Admin/Oper Address/Mask       Node
Port    Home
----------- ------------------ ---------- ------------------
------------ ------- ----
Cluster
            cluster1-01_clus1  up/up      169.254.209.69/16
cluster1-01   e0a     true
            cluster1-01_clus2  up/up      169.254.49.125/16
cluster1-01   e0b     true
            cluster1-02_clus1  up/up      169.254.47.194/16
cluster1-02   e0a     true
            cluster1-02_clus2  up/up      169.254.19.183/16
cluster1-02   e0b     true

4 entries were displayed.
```

5. Verify the connectivity of the remote cluster interfaces:

ONTAP 9.9.1 and later

You can use the `network interface check cluster-connectivity` command to start an accessibility check for cluster connectivity and then display the details:

`network interface check cluster-connectivity start` and `network interface check cluster-connectivity show`

```
cluster1::*> network interface check cluster-connectivity start
```

NOTE: Wait for a number of seconds before running the `show` command to display the details.

```
cluster1::*> network interface check cluster-connectivity show
                                  Source               Destination
Packet
Node   Date                       LIF                  LIF
Loss
------ -------------------------- -------------------
------------------ -----------
node1
       3/5/2022 19:21:18 -06:00   cluster1-01_clus2    cluster1-02-
clus1   none
       3/5/2022 19:21:20 -06:00   cluster1-01_clus2    cluster1-
02_clus2   none
node2
       3/5/2022 19:21:18 -06:00   cluster1-02_clus2    cluster1-
01_clus1   none
       3/5/2022 19:21:20 -06:00   cluster1-02_clus2    cluster1-
01_clus2   none
```

All ONTAP releases

For all ONTAP releases, you can also use the `cluster ping-cluster -node <name>` command to check the connectivity:

```
cluster ping-cluster -node <name>
```

```
cluster1::*> cluster ping-cluster -node local
Host is cluster1-02
Getting addresses from network interface table...
Cluster cluster1-01_clus1 169.254.209.69 cluster1-01     e0a
Cluster cluster1-01_clus2 169.254.49.125 cluster1-01     e0b
Cluster cluster1-02_clus1 169.254.47.194 cluster1-02     e0a
Cluster cluster1-02_clus2 169.254.19.183 cluster1-02     e0b
Local = 169.254.47.194 169.254.19.183
Remote = 169.254.209.69 169.254.49.125
Cluster Vserver Id = 4294967293
Ping status:

Basic connectivity succeeds on 4 path(s)
Basic connectivity fails on 0 path(s)

Detected 9000 byte MTU on 4 path(s):
    Local 169.254.19.183 to Remote 169.254.209.69
    Local 169.254.19.183 to Remote 169.254.49.125
    Local 169.254.47.194 to Remote 169.254.209.69
    Local 169.254.47.194 to Remote 169.254.49.125
Larger than PMTU communication succeeds on 4 path(s)
RPC status:
2 paths up, 0 paths down (tcp check)
2 paths up, 0 paths down (udp check)
```

6. Verify that the auto-revert command is enabled on all cluster LIFs:

```
network interface show -vserver Cluster -fields auto-revert
```

Show example

```
cluster1::*> network interface show -vserver Cluster -fields auto-
revert

          Logical
Vserver   Interface           Auto-revert
--------- ------------------- ------------
Cluster
          cluster1-01_clus1   true
          cluster1-01_clus2   true
          cluster1-02_clus1   true
          cluster1-02_clus2   true
4 entries were displayed.
```

What's next?

After you've prepared to install the NX-OS software and RCF, you can install or upgrade the NX-OS software.

Install or upgrade the NX-OS software

Follow this procedure to install or upgrade the NX-OS software on the Nexus 9336C-FX2 and 9336C-FX2-T cluster switches.

Before you begin, complete the procedure in Prepare to install NX-OS and RCF.

Review requirements

Before you begin

Make sure you do the following:

- Run the `show install all impact nxos bootflash:<image_name>.bin` command on the switch to review the impact of installing or upgrading the new NX-OS software image. It verifies the image integrity, checks for necessary reboots, evaluates hardware compatibility, and confirms sufficient space.
- Review the release notes for the target NX-OS software version to check for any specific requirements.
- Verify that you have a current backup of the switch configuration.
- Verify that you have a fully functioning cluster (no errors in the logs or similar issues).

Suggested documentation

- Cisco Ethernet switch page

  Consult the switch compatibility table for the supported ONTAP and NX-OS versions.

- Software Upgrade and downgrade guides

  Refer to the appropriate software and upgrade guides available on the Cisco website for complete documentation on the Cisco switch upgrade and downgrade procedures.

- Cisco Nexus 9000 and 3000 Upgrade and ISSU Matrix

  Provides information on Disruptive Upgrade/Downgrade for Cisco NX-OS software on Nexus 9000 Series Switches
  based on your current and target releases.

  On the page, select **Disruptive Upgrade** and select your current release and target release from the dropdown list.

About the examples

The examples in this procedure use the following switch and node nomenclature:

- The names of the two Cisco switches are cs1 and cs2.
- The node names are cluster1-01, cluster1-02, cluster1-03, and cluster1-04.
- The cluster LIF names are cluster1-01_clus1, cluster1-01_clus2, cluster1-02_clus1, cluster1-02_clus2 , cluster1-03_clus1, cluster1-03_clus2, cluster1-04_clus1, and cluster1-04_clus2.
- The `cluster1::*>` prompt indicates the name of the cluster.

Install the software

The procedure requires the use of both ONTAP commands and Cisco Nexus 9000 Series Switches commands; ONTAP commands are used unless otherwise indicated.

Steps

1. Connect the cluster switch to the management network.
2. Use the ping command to verify connectivity to the server hosting the NX-OS software and the RCF.

   Show example

   This example verifies that the switch can reach the server at IP address 172.19.2.1:

   ```
   cs2# ping 172.19.2.1 VRF management
   Pinging 172.19.2.1 with 0 bytes of data:

   Reply From 172.19.2.1: icmp_seq = 0. time= 5910 usec.
   ```

3. Display the cluster ports on each node that are connected to the cluster switches:

   ```
   network device-discovery show
   ```

Show example

```
cluster1::*> network device-discovery show
Node/       Local  Discovered
Protocol    Port   Device (LLDP: ChassisID)  Interface
Platform
----------- ------ ------------------------- ----------------
--------------
cluster1-01/cdp
            e0a    cs1                       Ethernet1/7       N9K-
C9336C-FX2
            e0b    cs2                       Ethernet1/7       N9K-
C9336C-FX2
cluster1-02/cdp
            e0a    cs1                       Ethernet1/8       N9K-
C9336C-FX2
            e0b    cs2                       Ethernet1/8       N9K-
C9336C-FX2
cluster1-03/cdp
            e0a    cs1                       Ethernet1/1/1     N9K-
C9336C-FX2
            e0b    cs2                       Ethernet1/1/1     N9K-
C9336C-FX2
cluster1-04/cdp
            e0a    cs1                       Ethernet1/1/2     N9K-
C9336C-FX2
            e0b    cs2                       Ethernet1/1/2     N9K-
C9336C-FX2
cluster1::*>
```

4. Check the administrative and operational status of each cluster port.
   a. Verify that all the cluster ports are **up** with a healthy status:

      ```
      network port show -ipspace Cluster
      ```

Show example

```
cluster1::*> network port show -ipspace Cluster

Node: cluster1-01

Ignore
                                                  Speed(Mbps)
Health   Health
Port      IPspace      Broadcast Domain Link MTU  Admin/Oper
Status   Status
--------- ------------ ---------------- ---- ---- -----------
-------- ------
e0a       Cluster      Cluster          up   9000  auto/100000
healthy false
e0b       Cluster      Cluster          up   9000  auto/100000
healthy false

Node: cluster1-02

Ignore
                                                  Speed(Mbps)
Health   Health
Port      IPspace      Broadcast Domain Link MTU  Admin/Oper
Status   Status
--------- ------------ ---------------- ---- ---- -----------
-------- ------
e0a       Cluster      Cluster          up   9000  auto/100000
healthy false
e0b       Cluster      Cluster          up   9000  auto/100000
healthy false
8 entries were displayed.

Node: cluster1-03

   Ignore
                                                  Speed(Mbps)
Health   Health
Port      IPspace      Broadcast Domain Link MTU  Admin/Oper
Status   Status
--------- ------------ ---------------- ---- ---- -----------
-------- ------
e0a       Cluster      Cluster          up   9000  auto/10000
healthy  false
e0b       Cluster      Cluster          up   9000  auto/10000
healthy  false
```

```
Node: cluster1-04

Ignore
                                                          Speed(Mbps)
Health   Health
Port      IPspace      Broadcast Domain Link MTU  Admin/Oper
Status   Status
--------- ------------ ---------------- ---- ---- -----------
-------- ------
e0a       Cluster      Cluster          up   9000  auto/10000
healthy  false
e0b       Cluster      Cluster          up   9000  auto/10000
healthy  false
cluster1::*>
```

b. Verify that all the cluster interfaces (LIFs) are on the home port:

```
network interface show -vserver Cluster
```

Show example

```
cluster1::*> network interface show -vserver Cluster
            Logical            Status     Network
Current      Current Is
Vserver     Interface          Admin/Oper Address/Mask      Node
Port    Home
----------- ------------------ ---------- -----------------
------------ ------- ----
Cluster
            cluster1-01_clus1  up/up     169.254.3.4/23
cluster1-01  e0a     true
            cluster1-01_clus2  up/up     169.254.3.5/23
cluster1-01  e0b     true
            cluster1-02_clus1  up/up     169.254.3.8/23
cluster1-02  e0a     true
            cluster1-02_clus2  up/up     169.254.3.9/23
cluster1-02  e0b     true
            cluster1-03_clus1  up/up     169.254.1.3/23
cluster1-03  e0a     true
            cluster1-03_clus2  up/up     169.254.1.1/23
cluster1-03  e0b     true
            cluster1-04_clus1  up/up     169.254.1.6/23
cluster1-04  e0a     true
            cluster1-04_clus2  up/up     169.254.1.7/23
cluster1-04  e0b     true
8 entries were displayed.
cluster1::*>
```

c. Verify that the cluster displays information for both cluster switches:

`system cluster-switch show -is-monitoring-enabled-operational true`

Show example

```
cluster1::*> system cluster-switch show -is-monitoring-enabled
-operational true
Switch                      Type               Address
Model
--------------------------- ------------------ ----------------
--------------
cs1                         cluster-network    10.233.205.90
N9K-C9336C-FX2
     Serial Number: FOCXXXXXXGD
      Is Monitored: true
            Reason: None
  Software Version: Cisco Nexus Operating System (NX-OS)
Software, Version
                    9.3(5)
    Version Source: CDP

cs2                         cluster-network    10.233.205.91
N9K-C9336C-FX2
     Serial Number: FOCXXXXXXGS
      Is Monitored: true
            Reason: None
  Software Version: Cisco Nexus Operating System (NX-OS)
Software, Version
                    9.3(5)
    Version Source: CDP
cluster1::*>
```

5. Disable auto-revert on the cluster LIFs. The cluster LIFs fail over to the partner cluster switch and remain there as you perform the upgrade procedure on the targeted switch:

   ```
   network interface modify -vserver Cluster -lif * -auto-revert false
   ```

6. Copy the NX-OS software and EPLD images to the Nexus 9336C-FX2 switch.

Show example

```
cs2# copy sftp: bootflash: vrf management
Enter source filename: /code/nxos.9.3.5.bin
Enter hostname for the sftp server: 172.19.2.1
Enter username: user1

Outbound-ReKey for 172.19.2.1:22
Inbound-ReKey for 172.19.2.1:22
user1@172.19.2.1's password:
sftp> progress
Progress meter enabled
sftp> get   /code/nxos.9.3.5.bin  /bootflash/nxos.9.3.5.bin
/code/nxos.9.3.5.bin  100% 1261MB   9.3MB/s   02:15
sftp> exit
Copy complete, now saving to disk (please wait)...
Copy complete.


cs2# copy sftp: bootflash: vrf management
Enter source filename: /code/n9000-epld.9.3.5.img
Enter hostname for the sftp server: 172.19.2.1
Enter username: user1

Outbound-ReKey for 172.19.2.1:22
Inbound-ReKey for 172.19.2.1:22
user1@172.19.2.1's password:
sftp> progress
Progress meter enabled
sftp> get   /code/n9000-epld.9.3.5.img  /bootflash/n9000-
epld.9.3.5.img
/code/n9000-epld.9.3.5.img  100%  161MB   9.5MB/s   00:16
sftp> exit
Copy complete, now saving to disk (please wait)...
Copy complete.
```

7. Verify the running version of the NX-OS software:

   ```
   show version
   ```

Show example

```
cs2# show version
Cisco Nexus Operating System (NX-OS) Software
TAC support: http://www.cisco.com/tac
Copyright (C) 2002-2020, Cisco and/or its affiliates.
All rights reserved.
The copyrights to certain works contained in this software are
owned by other third parties and used and distributed under their
own
licenses, such as open source.  This software is provided "as is,"
and unless
otherwise stated, there is no warranty, express or implied,
including but not
limited to warranties of merchantability and fitness for a
particular purpose.
Certain components of this software are licensed under
the GNU General Public License (GPL) version 2.0 or
GNU General Public License (GPL) version 3.0  or the GNU
Lesser General Public License (LGPL) Version 2.1 or
Lesser General Public License (LGPL) Version 2.0.
A copy of each such license is available at
http://www.opensource.org/licenses/gpl-2.0.php and
http://opensource.org/licenses/gpl-3.0.html and
http://www.opensource.org/licenses/lgpl-2.1.php and
http://www.gnu.org/licenses/old-licenses/library.txt.

Software
  BIOS: version 08.38
  NXOS: version 9.3(4)
  BIOS compile time:  05/29/2020
  NXOS image file is: bootflash:///nxos.9.3.4.bin
  NXOS compile time:  4/28/2020 21:00:00 [04/29/2020 02:28:31]


Hardware
  cisco Nexus9000 C9336C-FX2 Chassis
  Intel(R) Xeon(R) CPU E5-2403 v2 @ 1.80GHz with 8154432 kB of
memory.
  Processor Board ID FOC20291J6K

  Device name: cs2
  bootflash:   53298520 kB
Kernel uptime is 0 day(s), 0 hour(s), 3 minute(s), 42 second(s)
```

```
Last reset at 157524 usecs after Mon Nov  2 18:32:06 2020
  Reason: Reset Requested by CLI command reload
  System version: 9.3(4)
  Service:

plugin
  Core Plugin, Ethernet Plugin

Active Package(s):


cs2#
```

8. Install the NX-OS image.

   Installing the image file causes it to be loaded every time the switch is rebooted.

Show example

```
cs2# install all nxos bootflash:nxos.9.3.5.bin

Installer will perform compatibility check first. Please wait.
Installer is forced disruptive

Verifying image bootflash:/nxos.9.3.5.bin for boot variable "nxos".
[] 100% -- SUCCESS

Verifying image type.
[] 100% -- SUCCESS

Preparing "nxos" version info using image bootflash:/nxos.9.3.5.bin.
[] 100% -- SUCCESS

Preparing "bios" version info using image bootflash:/nxos.9.3.5.bin.
[] 100% -- SUCCESS

Performing module support checks.
[] 100% -- SUCCESS

Notifying services about system upgrade.
[] 100% -- SUCCESS



Compatibility check is done:
Module  Bootable  Impact          Install-type  Reason
------  --------  --------------- ------------  ---------
  1     yes       Disruptive      Reset         Default upgrade is
not hitless



Images will be upgraded according to following table:

Module   Image    Running-Version(pri:alt)                New-
Version         Upg-Required
-------  -------- ----------------------------------------
-------------------- ------------
  1      nxos     9.3(4)                                  9.3(5)
yes
  1      bios     v08.37(01/28/2020):v08.23(09/23/2015)
v08.38(05/29/2020)      yes
```

```
Switch will be reloaded for disruptive upgrade.

Do you want to continue with the installation (y/n)? [n] y

Install is in progress, please wait.

Performing runtime checks.
[] 100% -- SUCCESS

Setting boot variables.
[] 100% -- SUCCESS

Performing configuration copy.
[] 100% -- SUCCESS

Module 1: Refreshing compact flash and upgrading
bios/loader/bootrom.
Warning: please do not remove or power off the module at this time.
[] 100% -- SUCCESS

Finishing the upgrade, switch will reboot in 10 seconds.
```

9. Verify the new version of NX-OS software after the switch has rebooted:

   ```
   show version
   ```

Show example

```
cs2# show version

Cisco Nexus Operating System (NX-OS) Software
TAC support: http://www.cisco.com/tac
Copyright (C) 2002-2020, Cisco and/or its affiliates.
All rights reserved.
The copyrights to certain works contained in this software are
owned by other third parties and used and distributed under their
own
licenses, such as open source.  This software is provided "as is,"
and unless
otherwise stated, there is no warranty, express or implied,
including but not
limited to warranties of merchantability and fitness for a
particular purpose.
Certain components of this software are licensed under
the GNU General Public License (GPL) version 2.0 or
GNU General Public License (GPL) version 3.0  or the GNU
Lesser General Public License (LGPL) Version 2.1 or
Lesser General Public License (LGPL) Version 2.0.
A copy of each such license is available at
http://www.opensource.org/licenses/gpl-2.0.php and
http://opensource.org/licenses/gpl-3.0.html and
http://www.opensource.org/licenses/lgpl-2.1.php and
http://www.gnu.org/licenses/old-licenses/library.txt.

Software
  BIOS: version 05.33
  NXOS: version 9.3(5)
  BIOS compile time:  09/08/2018
  NXOS image file is: bootflash:///nxos.9.3.5.bin
  NXOS compile time:  11/4/2018 21:00:00 [11/05/2018 06:11:06]


Hardware
  cisco Nexus9000 C9336C-FX2 Chassis
  Intel(R) Xeon(R) CPU E5-2403 v2 @ 1.80GHz with 8154432 kB of
memory.
  Processor Board ID FOC20291J6K

  Device name: cs2
  bootflash:   53298520 kB
Kernel uptime is 0 day(s), 0 hour(s), 3 minute(s), 42 second(s)
```

```
Last reset at 277524 usecs after Mon Nov  2 22:45:12 2020
  Reason: Reset due to upgrade
  System version: 9.3(4)
  Service:

plugin
  Core Plugin, Ethernet Plugin

Active Package(s):
```

10. Upgrade the EPLD image and reboot the switch.

Show example

```
cs2# show version module 1 epld

EPLD Device                          Version
---------------------------------------
MI   FPGA                             0x7
IO   FPGA                             0x17
MI   FPGA2                            0x2
GEM  FPGA                             0x2
GEM  FPGA                             0x2
GEM  FPGA                             0x2
GEM  FPGA                             0x2

cs2# install epld bootflash:n9000-epld.9.3.5.img module all
Compatibility check:
Module        Type         Upgradable        Impact    Reason
------  ------------------ ----------------- --------- -----------
     1         SUP         Yes       disruptive  Module Upgradable

Retrieving EPLD versions.... Please wait.
Images will be upgraded according to following table:
Module  Type   EPLD              Running-Version   New-Version  Upg-
Required
------- ------ ----------------- ----------------- ------------
------------
     1  SUP    MI FPGA           0x07              0x07         No
     1  SUP    IO FPGA           0x17              0x19         Yes
     1  SUP    MI FPGA2          0x02              0x02         No
The above modules require upgrade.
The switch will be reloaded at the end of the upgrade
Do you want to continue (y/n) ?  [n] y

Proceeding to upgrade Modules.

Starting Module 1 EPLD Upgrade

Module 1 : IO FPGA [Programming] : 100.00% (     64 of      64
sectors)
Module 1 EPLD upgrade is successful.
Module   Type  Upgrade-Result
-------- ----- --------------
     1   SUP   Success

EPLDs upgraded.

Module 1 EPLD upgrade is successful.
```

11. After the switch reboot, log in again and verify that the new version of EPLD loaded successfully.

Show example

```
cs2# show version module 1 epld

EPLD Device                          Version
--------------------------------------
MI   FPGA                             0x7
IO   FPGA                             0x19
MI   FPGA2                            0x2
GEM  FPGA                             0x2
GEM  FPGA                             0x2
GEM  FPGA                             0x2
GEM  FPGA                             0x2
```

12. Verify the health of cluster ports on the cluster.
    a. Verify that cluster ports are up and healthy across all nodes in the cluster:

    ```
    network port show -ipspace Cluster
    ```

Show example

```
cluster1::*> network port show -ipspace Cluster

Node: cluster1-01

Ignore
                                                  Speed(Mbps)
Health   Health
Port      IPspace      Broadcast Domain Link MTU  Admin/Oper
Status   Status
--------- ------------ ---------------- ---- ---- -----------
-------- ------
e0a       Cluster      Cluster          up   9000  auto/10000
healthy  false
e0b       Cluster      Cluster          up   9000  auto/10000
healthy  false

Node: cluster1-02

Ignore
                                                  Speed(Mbps)
Health   Health
Port      IPspace      Broadcast Domain Link MTU  Admin/Oper
Status   Status
--------- ------------ ---------------- ---- ---- -----------
-------- ------
e0a       Cluster      Cluster          up   9000  auto/10000
healthy  false
e0b       Cluster      Cluster          up   9000  auto/10000
healthy  false

Node: cluster1-03

Ignore
                                                  Speed(Mbps)
Health   Health
Port      IPspace      Broadcast Domain Link MTU  Admin/Oper
Status   Status
--------- ------------ ---------------- ---- ---- -----------
-------- ------
e0a       Cluster      Cluster          up   9000  auto/100000
healthy false
e0b       Cluster      Cluster          up   9000  auto/100000
healthy false
```

```
Node: cluster1-04

Ignore
                                                          Speed(Mbps)
Health   Health
Port      IPspace      Broadcast Domain Link MTU  Admin/Oper
Status   Status
--------- ------------ ---------------- ---- ---- -----------
-------- ------
e0a       Cluster      Cluster          up   9000  auto/100000
healthy false
e0b       Cluster      Cluster          up   9000  auto/100000
healthy false
8 entries were displayed.
```

b. Verify the switch health from the cluster.

```
network device-discovery show -protocol cdp
```

Show example

```
cluster1::*> network device-discovery show -protocol cdp
Node/       Local  Discovered
Protocol    Port   Device (LLDP: ChassisID)  Interface
Platform
----------- ------ ------------------------- -----------------
--------------
cluster1-01/cdp
            e0a    cs1                       Ethernet1/7
N9K-C9336C-FX2
            e0b    cs2                       Ethernet1/7
N9K-C9336C-FX2
cluster01-2/cdp
            e0a    cs1                       Ethernet1/8
N9K-C9336C-FX2
            e0b    cs2                       Ethernet1/8
N9K-C9336C-FX2
cluster01-3/cdp
            e0a    cs1                       Ethernet1/1/1
N9K-C9336C-FX2
            e0b    cs2                       Ethernet1/1/1
N9K-C9336C-FX2
cluster1-04/cdp
            e0a    cs1                       Ethernet1/1/2
N9K-C9336C-FX2
            e0b    cs2                       Ethernet1/1/2
N9K-C9336C-FX2

cluster1::*> system cluster-switch show -is-monitoring-enabled
-operational true
Switch                      Type               Address
Model
--------------------------- ------------------ ----------------
--------------
cs1                         cluster-network    10.233.205.90
N9K-C9336C-FX2
     Serial Number: FOCXXXXXXGD
      Is Monitored: true
            Reason: None
  Software Version: Cisco Nexus Operating System (NX-OS)
Software, Version
                    9.3(5)
    Version Source: CDP

cs2                         cluster-network    10.233.205.91
```

```
N9K-C9336C-FX2
     Serial Number: FOCXXXXXXGS
      Is Monitored: true
            Reason: None
  Software Version: Cisco Nexus Operating System (NX-OS)
Software, Version
                    9.3(5)
    Version Source: CDP

2 entries were displayed.
```

You might observe the following output on the cs1 switch console depending on the RCF version previously loaded on the switch:

```
2020 Nov 17 16:07:18 cs1 %$ VDC-1 %$ %STP-2-UNBLOCK_CONSIST_PORT:
Unblocking port port-channel1 on VLAN0092. Port consistency
restored.
2020 Nov 17 16:07:23 cs1 %$ VDC-1 %$ %STP-2-BLOCK_PVID_PEER:
Blocking port-channel1 on VLAN0001. Inconsistent peer vlan.
2020 Nov 17 16:07:23 cs1 %$ VDC-1 %$ %STP-2-BLOCK_PVID_LOCAL:
Blocking port-channel1 on VLAN0092. Inconsistent local vlan.
```

13. Verify that the cluster is healthy:

    `cluster show`

    Show example

```
cluster1::*> cluster show
Node                 Health   Eligibility   Epsilon
-------------------- -------- ------------- -------
cluster1-01          true     true          false
cluster1-02          true     true          false
cluster1-03          true     true          true
cluster1-04          true     true          false
4 entries were displayed.
cluster1::*>
```

14. Repeat steps 6 to 13 to install the NX-OS software on switch cs1.
15. Verify the connectivity of the remote cluster interfaces before enabling auto-revert on the cluster LIFs:

ONTAP 9.9.1 and later

You can use the `network interface check cluster-connectivity` command to start an accessibility check for cluster connectivity and then display the details:

`network interface check cluster-connectivity start` and `network interface check cluster-connectivity show`

```
cluster1::*> network interface check cluster-connectivity start
```

NOTE: Wait for a number of seconds before running the `show` command to display the details.

```
cluster1::*> network interface check cluster-connectivity show
                                  Source               Destination
Packet
Node   Date                       LIF                  LIF
Loss
------ -------------------------- -------------------
------------------ -----------
cluster1-01
       3/5/2022 19:21:18 -06:00   cluster1-01_clus2    cluster1-02-
clus1   none
       3/5/2022 19:21:20 -06:00   cluster1-01_clus2    cluster1-
02_clus2   none
cluster1-02
       3/5/2022 19:21:18 -06:00   cluster1-02_clus2    cluster1-
01_clus1   none
       3/5/2022 19:21:20 -06:00   cluster1-02_clus2    cluster1-
01_clus2   none
```

All ONTAP releases

For all ONTAP releases, you can also use the `cluster ping-cluster -node <name>` command to check the connectivity:

```
cluster ping-cluster -node <name>
```

```
cluster1::*> cluster ping-cluster -node local
Host is cluster1-02
Getting addresses from network interface table...
Cluster cluster1-01_clus1 169.254.209.69 cluster1-01     e0a
Cluster cluster1-01_clus2 169.254.49.125 cluster1-01     e0b
Cluster cluster1-02_clus1 169.254.47.194 cluster1-02     e0a
Cluster cluster1-02_clus2 169.254.19.183 cluster1-02     e0b
Local = 169.254.47.194 169.254.19.183
Remote = 169.254.209.69 169.254.49.125
Cluster Vserver Id = 4294967293
Ping status:

Basic connectivity succeeds on 4 path(s)
Basic connectivity fails on 0 path(s)

Detected 9000 byte MTU on 4 path(s):
    Local 169.254.19.183 to Remote 169.254.209.69
    Local 169.254.19.183 to Remote 169.254.49.125
    Local 169.254.47.194 to Remote 169.254.209.69
    Local 169.254.47.194 to Remote 169.254.49.125
Larger than PMTU communication succeeds on 4 path(s)
RPC status:
2 paths up, 0 paths down (tcp check)
2 paths up, 0 paths down (udp check)
```

16. Enable auto-revert on the cluster LIFs.

    network interface modify -vserver Cluster -lif * -auto-revert true

17. Verify that the cluster LIFs have reverted to their home port:

    network interface show -vserver Cluster

Show example

```
cluster1::*> network interface show -vserver Cluster
            Logical             Status     Network             Current
Current Is
Vserver     Interface           Admin/Oper Address/Mask        Node
Port    Home
----------- ------------------ ---------- ------------------
------------------- ------- ----
Cluster
            cluster1-01_clus1  up/up      169.254.3.4/23
cluster1-01         e0b     true
            cluster1-01_clus2  up/up      169.254.3.5/23
cluster1-01         e0b     true
            cluster1-02_clus1  up/up      169.254.3.8/23
cluster1-02         e0b     true
            cluster1-02_clus2  up/up      169.254.3.9/23
cluster1-02         e0b     true
            cluster1-03_clus1  up/up      169.254.1.3/23
cluster1-03         e0b     true
            cluster1-03_clus2  up/up      169.254.1.1/23
cluster1-03         e0b     true
            cluster1-04_clus1  up/up      169.254.1.6/23
cluster1-04         e0b     true
            cluster1-04_clus2  up/up      169.254.1.7/23
cluster1-04         e0b     true
8 entries were displayed.
cluster1::*>
```

If any cluster LIFs have not returned to their home ports, revert them manually from the local node:

```
network interface revert -vserver Cluster -lif <lif_name>
```

What's next?

After you've installed or upgraded the NX-OS software, you can install or upgrade the Reference Configuration File (RCF).

Install or upgrade the RCF

Install or upgrade the Reference Configuration File (RCF) overview

You install the Reference Configuration File (RCF) after setting up the Nexus 9336C-FX2 and 9336C-FX2-T switches for the first time. You upgrade your RCF version when you have an existing version of the RCF file installed on your switch.

See the Knowledge Base article How to clear configuration on a Cisco interconnect switch while retaining

remote connectivity for further information when installing or upgrading your RCF.

Available RCF configurations

The following table describes the RCFs available for different configurations. Choose the RCF applicable to your configuration. See Cisco Ethernet Switches for more information.

For specific port and VLAN usage details, refer to the banner and important notes section in your RCF.

RCF configuration	Description
2-Cluster-HA-Breakout	Supports two ONTAP clusters with at least eight nodes, including nodes that use shared Cluster+HA ports.
4-Cluster-HA-Breakout	Supports four ONTAP clusters with at least four nodes, including nodes that use shared Cluster+HA ports.
1-Cluster-HA	All ports are configured for 40/100GbE. Supports shared cluster/HA traffic on ports. Required for AFF A320, AFF A250, and FAS500f systems. Additionally, all ports can be used as dedicated cluster ports.
1-Cluster-HA-Breakout	Ports are configured for 4x10GbE breakout, 4x25GbE breakout (RCF 1.6+ on 100GbE switches), and 40/100GbE. Supports shared cluster/HA traffic on ports for nodes that use shared cluster/HA ports: AFF A320, AFF A250, and FAS500f systems. Additionally, all ports can be used as dedicated cluster ports.
Cluster-HA-Storage	Ports are configured for 40/100GbE for Cluster+HA, 4x10GbE breakout for Cluster and 4x25GbE breakout for Cluster+HA, and 100GbE for each Storage HA Pair.
Cluster	Two flavors of RCF with different allocations of 4x10GbE ports (breakout) and 40/100GbE ports. All FAS/AFF nodes are supported, except for AFF A320, AFF A250, and FAS500f systems.
Storage	All ports are configured for 100GbE NVMe storage connections.

Available RCFs

The following table lists the available RCFs for 9336C-FX2 and 9336C-FX2-T switches. Choose the applicable RCF version for your configuration. See Cisco Ethernet Switches for more information.

RCF name
Cluster-HA-Breakout RCF 1.*xx*
Cluster-HA-Storage RCF 1.*xx*
Storage RCF 1.*xx*
MultiCluster-HA RCF 1.*xx*

Suggested documentation

- Cisco Ethernet Switches (NSS)

  Consult the switch compatibility table for the supported ONTAP and RCF versions on the NetApp Support Site. Note that there can be command dependencies between the command syntax in the RCF and the syntax found in specific versions of NX-OS.

- Cisco Nexus 9000 Series Switches

  Refer to the appropriate software and upgrade guides available on the Cisco website for complete documentation on the Cisco switch upgrade and downgrade procedures.

About the examples

The examples in this procedure use the following switch and node nomenclature:

- The names of the two Cisco switches are **cs1** and **cs2**.
- The node names are **cluster1-01**, **cluster1-02**, **cluster1-03**, and **cluster1-04**.
- The cluster LIF names are **cluster1-01_clus1**, **cluster1-01_clus2**, **cluster1-02_clus1**, **cluster1-02_clus2**, **cluster1-03_clus1**, **cluster1-03_clus2**, **cluster1-04_clus1**, and **cluster1-04_clus2**.
- The `cluster1::*>` prompt indicates the name of the cluster.

The examples in this procedure use four nodes. These nodes use two 10GbE cluster interconnect ports **e0a** and **e0b**. See the Hardware Universe to verify the correct cluster ports on your platforms.

> The command outputs might vary depending on different releases of ONTAP.

For details of the available RCF configurations, see Software install workflow.

Commands used

The procedure requires the use of both ONTAP commands and Cisco Nexus 9000 Series Switches commands; ONTAP commands are used unless otherwise indicated.

What's next?

After you've reviewed the install RCF or upgrade RCF procedure, you can install the RCF or upgrade your RCF as required.

Install the Reference Configuration File (RCF)

You install the Reference Configuration File (RCF) after setting up the Nexus 9336C-FX2 and 9336C-FX2-T switches for the first time.

Before you begin

Verify the following installations and connections:

- A console connection to the switch. The console connection is optional if you have remote access to the switch.
- Switch cs1 and switch cs2 are powered up and the initial switch setup is complete (the Management IP address and SSH is setup).
- The desired NX-OS version has been installed.

- ISL connections between switches are connected.
- ONTAP node cluster ports are not connected.

Step 1: Install the RCF on the switches

1. Login to switch cs1 using SSH or by using a serial console.
2. Copy the RCF to the bootflash of switch cs1 using one of the following transfer protocols: FTP, TFTP, SFTP, or SCP.

   For more information on Cisco commands, see the appropriate guide in the Cisco Nexus 9000 Series NX-OS Command Reference guides.

   Show example

   This example shows TFTP being used to copy an RCF to the bootflash on switch cs1:

   ```
   cs1# copy tftp: bootflash: vrf management
   Enter source filename: Nexus_9336C_RCF_v1.6-Cluster-HA-Breakout.txt
   Enter hostname for the tftp server: 172.22.201.50
   Trying to connect to tftp server......Connection to Server
   Established.
   TFTP get operation was successful
   Copy complete, now saving to disk (please wait)...
   ```

3. Apply the RCF previously downloaded to the bootflash.

   For more information on Cisco commands, see the appropriate guide in the Cisco Nexus 9000 Series NX-OS Command Reference guides.

   This example shows the RCF file `Nexus_9336C_RCF_v1.6-Cluster-HA-Breakout.txt` being installed on switch cs1:

   ```
   cs1# copy Nexus_9336C_RCF_v1.6-Cluster-HA-Breakout.txt running-config
   echo-commands
   ```

4. Examine the banner output from the `show banner motd` command. You must read and follow these instructions to ensure the proper configuration and operation of the switch.

Show example

```
cs1# show banner motd

**********************************************************************
**********
* NetApp Reference Configuration File (RCF)
*
* Switch   : Nexus N9K-C9336C-FX2
* Filename : Nexus_9336C_RCF_v1.6-Cluster-HA-Breakout.txt
* Date     : 10-23-2020
* Version  : v1.6
*
* Port Usage:
* Ports  1- 3: Breakout mode (4x10G) Intra-Cluster Ports, int
e1/1/1-4, e1/2/1-4
, e1/3/1-4
* Ports  4- 6: Breakout mode (4x25G) Intra-Cluster/HA Ports, int
e1/4/1-4, e1/5/
1-4, e1/6/1-4
* Ports  7-34: 40/100GbE Intra-Cluster/HA Ports, int e1/7-34
* Ports 35-36: Intra-Cluster ISL Ports, int e1/35-36
*
* Dynamic breakout commands:
* 10G: interface breakout module 1 port <range> map 10g-4x
* 25G: interface breakout module 1 port <range> map 25g-4x
*
* Undo breakout commands and return interfaces to 40/100G
configuration in confi
g mode:
* no interface breakout module 1 port <range> map 10g-4x
* no interface breakout module 1 port <range> map 25g-4x
* interface Ethernet <interfaces taken out of breakout mode>
* inherit port-profile 40-100G
* priority-flow-control mode auto
* service-policy input HA
* exit
*
**********************************************************************
**********
```

5. Verify that the RCF file is the correct newer version:

   ```
   show running-config
   ```

When you check the output to verify you have the correct RCF, make sure that the following information is correct:

- The RCF banner
- The node and port settings
- Customizations

  The output varies according to your site configuration. Check the port settings and refer to the release notes for any changes specific to the RCF that you have installed.

6. Record any custom additions between the current `running-config` file and the RCF file in use.
7. After you verify that the RCF versions and switch settings are correct, copy the `running-config` file to the `startup-config` file.

```
cs1# copy running-config startup-config
[########################################] 100% Copy complete
```

8. Save basic configuration details to the `write_erase.cfg` file on the bootflash.

Make sure to configure the following:

- Username and password
- Management IP address
- Default gateway
- Switch name

```
cs1# show run | i "username admin password" > bootflash:write_erase.cfg

cs1# show run | section "vrf context management" >> bootflash:write_erase.cfg

cs1# show run | section "interface mgmt0" >> bootflash:write_erase.cfg

cs1# show run | section "switchname" >> bootflash:write_erase.cfg
```

9. When installing RCF version 1.12 and later, run the following commands:

```
cs1# echo "hardware access-list tcam region ing-racl 1024" >>
bootflash:write_erase.cfg

cs1# echo "hardware access-list tcam region egr-racl 1024" >>
bootflash:write_erase.cfg

cs1# echo "hardware access-list tcam region ing-l2-qos 1280" >>
bootflash:write_erase.cfg
```

See the Knowledge Base article How to clear configuration on a Cisco interconnect switch while retaining remote connectivity for further details.

10. Verify that the `write_erase.cfg` file is populated as expected:

    `show file bootflash:write_erase.cfg`

11. Repeat steps 1 through 10 on switch cs2.
12. Connect the cluster ports of all nodes in the ONTAP cluster to switches cs1 and cs2.

Step 2: Verify the switch connections

1. Verify that the switch ports connected to the cluster ports are **up**.

    `show interface brief`

    Show example

    ```
    cs1# show interface brief | grep up
    .
    .
    Eth1/1/1      1       eth  access up      none
    10G(D) --
    Eth1/1/2      1       eth  access up      none
    10G(D) --
    Eth1/7        1       eth  trunk  up      none
    100G(D) --
    Eth1/8        1       eth  trunk  up      none
    100G(D) --
    .
    .
    ```

2. Verify that the cluster nodes are in their correct cluster VLANs using the following commands:

    `show vlan brief`

    `show interface trunk`

Show example

```
cs1# show vlan brief

VLAN Name                              Status    Ports
---- --------------------------------- ---------
------------------------------
1    default                           active    Po1, Eth1/1, Eth1/2,
Eth1/3
                                                 Eth1/4, Eth1/5,
Eth1/6, Eth1/7
                                                 Eth1/8, Eth1/35,
Eth1/36
                                                 Eth1/9/1, Eth1/9/2,
Eth1/9/3
                                                 Eth1/9/4, Eth1/10/1,
Eth1/10/2
                                                 Eth1/10/3, Eth1/10/4
17   VLAN0017                          active    Eth1/1, Eth1/2,
Eth1/3, Eth1/4
                                                 Eth1/5, Eth1/6,
Eth1/7, Eth1/8
                                                 Eth1/9/1, Eth1/9/2,
Eth1/9/3
                                                 Eth1/9/4, Eth1/10/1,
Eth1/10/2
                                                 Eth1/10/3, Eth1/10/4
18   VLAN0018                          active    Eth1/1, Eth1/2,
Eth1/3, Eth1/4
                                                 Eth1/5, Eth1/6,
Eth1/7, Eth1/8
                                                 Eth1/9/1, Eth1/9/2,
Eth1/9/3
                                                 Eth1/9/4, Eth1/10/1,
Eth1/10/2
                                                 Eth1/10/3, Eth1/10/4
31   VLAN0031                          active    Eth1/11, Eth1/12,
Eth1/13
                                                 Eth1/14, Eth1/15,
Eth1/16
                                                 Eth1/17, Eth1/18,
Eth1/19
                                                 Eth1/20, Eth1/21,
Eth1/22
32   VLAN0032                          active    Eth1/23, Eth1/24,
Eth1/25
```

```
                                                  Eth1/26, Eth1/27,
Eth1/28
                                                  Eth1/29, Eth1/30,
Eth1/31
                                                  Eth1/32, Eth1/33,
Eth1/34
33   VLAN0033                         active    Eth1/11, Eth1/12,
Eth1/13
                                                  Eth1/14, Eth1/15,
Eth1/16
                                                  Eth1/17, Eth1/18,
Eth1/19
                                                  Eth1/20, Eth1/21,
Eth1/22
34   VLAN0034                         active    Eth1/23, Eth1/24,
Eth1/25
                                                  Eth1/26, Eth1/27,
Eth1/28
                                                  Eth1/29, Eth1/30,
Eth1/31
                                                  Eth1/32, Eth1/33,
Eth1/34

cs1# show interface trunk

----------------------------------------------------
Port          Native  Status        Port
              Vlan                  Channel
----------------------------------------------------
Eth1/1        1       trunking      --
Eth1/2        1       trunking      --
Eth1/3        1       trunking      --
Eth1/4        1       trunking      --
Eth1/5        1       trunking      --
Eth1/6        1       trunking      --
Eth1/7        1       trunking      --
Eth1/8        1       trunking      --
Eth1/9/1      1       trunking      --
Eth1/9/2      1       trunking      --
Eth1/9/3      1       trunking      --
Eth1/9/4      1       trunking      --
Eth1/10/1     1       trunking      --
Eth1/10/2     1       trunking      --
Eth1/10/3     1       trunking      --
Eth1/10/4     1       trunking      --
Eth1/11       33      trunking      --
```

```
Eth1/12       33      trunking      --
Eth1/13       33      trunking      --
Eth1/14       33      trunking      --
Eth1/15       33      trunking      --
Eth1/16       33      trunking      --
Eth1/17       33      trunking      --
Eth1/18       33      trunking      --
Eth1/19       33      trunking      --
Eth1/20       33      trunking      --
Eth1/21       33      trunking      --
Eth1/22       33      trunking      --
Eth1/23       34      trunking      --
Eth1/24       34      trunking      --
Eth1/25       34      trunking      --
Eth1/26       34      trunking      --
Eth1/27       34      trunking      --
Eth1/28       34      trunking      --
Eth1/29       34      trunking      --
Eth1/30       34      trunking      --
Eth1/31       34      trunking      --
Eth1/32       34      trunking      --
Eth1/33       34      trunking      --
Eth1/34       34      trunking      --
Eth1/35       1       trnk-bndl     Po1
Eth1/36       1       trnk-bndl     Po1
Po1           1       trunking      --

----------------------------------------------------
Port          Vlans Allowed on Trunk
----------------------------------------------------
Eth1/1        1,17-18
Eth1/2        1,17-18
Eth1/3        1,17-18
Eth1/4        1,17-18
Eth1/5        1,17-18
Eth1/6        1,17-18
Eth1/7        1,17-18
Eth1/8        1,17-18
Eth1/9/1      1,17-18
Eth1/9/2      1,17-18
Eth1/9/3      1,17-18
Eth1/9/4      1,17-18
Eth1/10/1     1,17-18
Eth1/10/2     1,17-18
Eth1/10/3     1,17-18
Eth1/10/4     1,17-18
```

```
Eth1/11       31,33
Eth1/12       31,33
Eth1/13       31,33
Eth1/14       31,33
Eth1/15       31,33
Eth1/16       31,33
Eth1/17       31,33
Eth1/18       31,33
Eth1/19       31,33
Eth1/20       31,33
Eth1/21       31,33
Eth1/22       31,33
Eth1/23       32,34
Eth1/24       32,34
Eth1/25       32,34
Eth1/26       32,34
Eth1/27       32,34
Eth1/28       32,34
Eth1/29       32,34
Eth1/30       32,34
Eth1/31       32,34
Eth1/32       32,34
Eth1/33       32,34
Eth1/34       32,34
Eth1/35       1
Eth1/36       1
Po1           1
..
..
..
..
..
```

For specific port and VLAN usage details, refer to the banner and important notes section in your RCF.

3. Verify that the ISL between cs1 and cs2 is functional:

```
show port-channel summary
```

Show example

```
cs1# show port-channel summary
Flags:  D - Down        P - Up in port-channel (members)
        I - Individual  H - Hot-standby (LACP only)
        s - Suspended   r - Module-removed
        b - BFD Session Wait
        S - Switched    R - Routed
        U - Up (port-channel)
        p - Up in delay-lacp mode (member)
        M - Not in use. Min-links not met
--------------------------------------------------------------------------
------------
Group Port-       Type     Protocol  Member Ports      Channel
--------------------------------------------------------------------------
------------
1     Po1(SU)     Eth      LACP      Eth1/35(P)        Eth1/36(P)
cs1#
```

Step 3: Set up your ONTAP cluster

NetApp recommends that you use System Manager to set up new clusters.

System Manager provides a simple and easy workflow for cluster set up and configuration including assigning a node management IP address, initializing the cluster, creating a local tier, configuring protocols and provisioning initial storage.

Go to Configure ONTAP on a new cluster with System Manager for setup instructions.

What's next?

After you've installed the RCF, you can verify the SSH configuration.

Upgrade your Reference Configuration File (RCF)

You upgrade your RCF version when you have an existing version of the RCF file installed on your operational switches.

Before you begin

Make sure you have the following:

- A current backup of the switch configuration.
- A fully functioning cluster (no errors in the logs or similar issues).
- The current RCF.
- If you are updating your RCF version, you need a boot configuration in the RCF that reflects the desired boot images.

If you need to change the boot configuration to reflect the current boot images, you must do so before reapplying the RCF so that the correct version is instantiated on future reboots.

No operational inter-switch link (ISL) is needed during this procedure. This is by design because RCF version changes can affect ISL connectivity temporarily. To ensure non-disruptive cluster operations, the following procedure migrates all of the cluster LIFs to the operational partner switch while performing the steps on the target switch.

Before installing a new switch software version and RCFs, you must erase the switch settings and perform basic configuration. You must be connected to the switch using the serial console or have preserved basic configuration information prior to erasing the switch settings.

Step 1: Prepare for the upgrade

1. Display the cluster ports on each node that are connected to the cluster switches:

```
network device-discovery show
```

Show example

```
cluster1::*> network device-discovery show
Node/       Local  Discovered
Protocol    Port   Device (LLDP: ChassisID)  Interface
Platform
----------- ------ ------------------------- ----------------
--------
cluster1-01/cdp
            e0a    cs1                       Ethernet1/7       N9K-
C9336C
            e0d    cs2                       Ethernet1/7       N9K-
C9336C
cluster1-02/cdp
            e0a    cs1                       Ethernet1/8       N9K-
C9336C
            e0d    cs2                       Ethernet1/8       N9K-
C9336C
cluster1-03/cdp
            e0a    cs1                       Ethernet1/1/1     N9K-
C9336C
            e0b    cs2                       Ethernet1/1/1     N9K-
C9336C
cluster1-04/cdp
            e0a    cs1                       Ethernet1/1/2     N9K-
C9336C
            e0b    cs2                       Ethernet1/1/2     N9K-
C9336C
cluster1::*>
```

2. Check the administrative and operational status of each cluster port.
   a. Verify that all the cluster ports are **up** with a healthy status:

      `network port show -ipspace cluster`

Show example

```
cluster1::*> network port show -ipspace cluster

Node: cluster1-01

Ignore
                                                  Speed(Mbps)
Health   Health
Port      IPspace      Broadcast Domain Link MTU  Admin/Oper
Status   Status
--------- ------------ ---------------- ---- ---- -----------
-------- ------
e0a       Cluster      Cluster          up   9000  auto/100000
healthy false
e0d       Cluster      Cluster          up   9000  auto/100000
healthy false

Node: cluster1-02

Ignore
                                                  Speed(Mbps)
Health   Health
Port      IPspace      Broadcast Domain Link MTU  Admin/Oper
Status   Status
--------- ------------ ---------------- ---- ---- -----------
-------- ------
e0a       Cluster      Cluster          up   9000  auto/100000
healthy false
e0d       Cluster      Cluster          up   9000  auto/100000
healthy false
8 entries were displayed.

Node: cluster1-03

   Ignore
                                                  Speed(Mbps)
Health   Health
Port      IPspace      Broadcast Domain Link MTU  Admin/Oper
Status   Status
--------- ------------ ---------------- ---- ---- -----------
-------- ------
e0a       Cluster      Cluster          up   9000  auto/10000
healthy  false
e0b       Cluster      Cluster          up   9000  auto/10000
healthy  false
```

```
Node: cluster1-04

Ignore
                                                          Speed(Mbps)
Health   Health
Port      IPspace      Broadcast Domain Link MTU  Admin/Oper
Status   Status
--------- ------------ ---------------- ---- ---- -----------
-------- ------
e0a       Cluster      Cluster          up   9000  auto/10000
healthy  false
e0b       Cluster      Cluster          up   9000  auto/10000
healthy  false
cluster1::*>
```

b. Verify that all the cluster interfaces (LIFs) are on the home port:

```
network interface show -vserver cluster
```

Show example

```
cluster1::*> network interface show -vserver cluster
            Logical            Status     Network
Current      Current Is
Vserver     Interface          Admin/Oper Address/Mask      Node
Port    Home
----------- ------------------ ---------- -----------------
------------ ------- ----
Cluster
            cluster1-01_clus1  up/up     169.254.3.4/23
cluster1-01  e0a     true
            cluster1-01_clus2  up/up     169.254.3.5/23
cluster1-01  e0d     true
            cluster1-02_clus1  up/up     169.254.3.8/23
cluster1-02  e0a     true
            cluster1-02_clus2  up/up     169.254.3.9/23
cluster1-02  e0d     true
            cluster1-03_clus1  up/up     169.254.1.3/23
cluster1-03  e0a     true
            cluster1-03_clus2  up/up     169.254.1.1/23
cluster1-03  e0b     true
            cluster1-04_clus1  up/up     169.254.1.6/23
cluster1-04  e0a     true
            cluster1-04_clus2  up/up     169.254.1.7/23
cluster1-04  e0b     true
8 entries were displayed.
cluster1::*>
```

c. Verify that the cluster displays information for both cluster switches:

```
system cluster-switch show -is-monitoring-enabled-operational true
```

Show example

```
cluster1::*> system cluster-switch show -is-monitoring-enabled
-operational true
Switch                        Type               Address
Model
----------------------------- ------------------ ----------------
-----
cs1                           cluster-network    10.233.205.90
N9K-C9336C
     Serial Number: FOCXXXXXXGD
      Is Monitored: true
            Reason: None
  Software Version: Cisco Nexus Operating System (NX-OS)
Software, Version
                    9.3(5)
    Version Source: CDP

cs2                           cluster-network    10.233.205.91
N9K-C9336C
     Serial Number: FOCXXXXXXGS
      Is Monitored: true
            Reason: None
  Software Version: Cisco Nexus Operating System (NX-OS)
Software, Version
                    9.3(5)
    Version Source: CDP
cluster1::*>
```

3. Disable auto-revert on the cluster LIFs.

```
cluster1::*> network interface modify -vserver Cluster -lif * -auto-revert
false
```

Step 2: Configure ports

1. On cluster switch cs1, shut down the ports connected to the cluster ports of the nodes.

```
cs1> enable

cs1# configure

cs1(config)# interface eth1/1/1-2,eth1/7-8

cs1(config-if-range)# shutdown
```

```
cs1(config-if-range)# exit

cs1# exit
```

> Make sure to shutdown **all** connected cluster ports to avoid any network connection issues. See the Knowledge Base article Node out of quorum when migrating cluster LIF during switch OS upgrade for further details.

2. Verify that the cluster LIFs have failed over to the ports hosted on cluster switch cs1. This might take a few seconds.

```
network interface show -vserver cluster
```

Show example

```
cluster1::*> network interface show -vserver cluster
            Logical           Status     Network            Current
Current Is
Vserver     Interface         Admin/Oper Address/Mask       Node
Port    Home
----------- ----------------- ---------- ------------------
------------ ------- ----
Cluster
            cluster1-01_clus1 up/up      169.254.3.4/23
cluster1-01   e0a     true
            cluster1-01_clus2 up/up      169.254.3.5/23
cluster1-01   e0a     false
            cluster1-02_clus1 up/up      169.254.3.8/23
cluster1-02   e0a     true
            cluster1-02_clus2 up/up      169.254.3.9/23
cluster1-02   e0a     false
            cluster1-03_clus1 up/up      169.254.1.3/23
cluster1-03   e0a     true
            cluster1-03_clus2 up/up      169.254.1.1/23
cluster1-03   e0a     false
            cluster1-04_clus1 up/up      169.254.1.6/23
cluster1-04   e0a     true
            cluster1-04_clus2 up/up      169.254.1.7/23
cluster1-04   e0a     false
8 entries were displayed.
cluster1::*>
```

3. Verify that the cluster is healthy:

```
cluster show
```

Show example

```
cluster1::*> cluster show
Node                  Health  Eligibility   Epsilon
--------------------- ------- ------------  -------
cluster1-01           true    true          false
cluster1-02           true    true          false
cluster1-03           true    true          true
cluster1-04           true    true          false
4 entries were displayed.
cluster1::*>
```

4. If you have not already done so, save a copy of the current switch configuration by copying the output of the following command to a text file:

   `show running-config`

   a. Record any custom additions between the current `running-config` and the RCF file in use (such as an SNMP configuration for your organization).

   b. Beginning with NX-OS 10.2, use the `show diff running-config` command to compare with the saved RCF file in the bootflash. Otherwise, use a third part diff/compare tool.

5. Save basic configuration details to the `write_erase.cfg` file on the bootflash.

   Make sure to configure the following:

   - Username and password
   - Management IP address
   - Default gateway
   - Switch name

```
cs1# show run | i "username admin password" > bootflash:write_erase.cfg

cs1# show run | section "vrf context management" >> bootflash:write_erase.cfg

cs1# show run | section "interface mgmt0" >> bootflash:write_erase.cfg

cs1# show run | section "switchname" >> bootflash:write_erase.cfg
```

6. When upgrading to RCF version 1.12 and later, run the following commands:

```
cs1# echo "hardware access-list tcam region ing-racl 1024" >>
bootflash:write_erase.cfg

cs1# echo "hardware access-list tcam region egr-racl 1024" >>
bootflash:write_erase.cfg
```

```
cs1# echo "hardware access-list tcam region ing-l2-qos 1280" >>
bootflash:write_erase.cfg
```

See the Knowledge Base article How to clear configuration on a Cisco interconnect switch while retaining remote connectivity for further details.

7. Verify that the `write_erase.cfg` file is populated as expected:

   `show file bootflash:write_erase.cfg`

8. Issue the write erase command to erase the current saved configuration:

   ```
   cs1# write erase

   Warning: This command will erase the startup-configuration.

   Do you wish to proceed anyway? (y/n) [n] y
   ```

9. Copy the previously saved basic configuration into the startup configuration.

   ```
   cs1# copy bootflash:write_erase.cfg startup-config
   ```

10. Perform a reboot of the switch:

    ```
    switch# reload

    This command will reboot the system. (y/n)? [n] y
    ```

11. After the management IP address is reachable again, log in to the switch through SSH.

    You may need to update host file entries related to the SSH keys.

12. Copy the RCF to the bootflash of switch cs1 using one of the following transfer protocols: FTP, TFTP, SFTP, or SCP.

    For more information on Cisco commands, see the appropriate guide in the Cisco Nexus 9000 Series NX-OS Command Reference guides.

    This example shows TFTP being used to copy an RCF to the bootflash on switch cs1:

    ```
    cs1# copy tftp: bootflash: vrf management
    Enter source filename: Nexus_9336C_RCF_v1.6-Cluster-HA-Breakout.txt
    Enter hostname for the tftp server: 172.22.201.50
    Trying to connect to tftp server......Connection to Server Established.
    TFTP get operation was successful
    Copy complete, now saving to disk (please wait)...
    ```

13. Apply the RCF previously downloaded to the bootflash.

    For more information on Cisco commands, see the appropriate guide in the Cisco Nexus 9000 Series NX-OS Command Reference.

This example shows the RCF file `Nexus_9336C_RCF_v1.6-Cluster-HA-Breakout.txt` being installed on switch cs1:

```
cs1# copy Nexus_9336C_RCF_v1.6-Cluster-HA-Breakout.txt running-config
echo-commands
```

Make sure to read thoroughly the **Installation notes**, **Important Notes**, and **banner** sections of your RCF. You must read and follow these instructions to ensure the proper configuration and operation of the switch.

14. Verify that the RCF file is the correct newer version:

    ```
    show running-config
    ```

    When you check the output to verify you have the correct RCF, make sure that the following information is correct:

    - The RCF banner
    - The node and port settings
    - Customizations

      The output varies according to your site configuration. Check the port settings and refer to the release notes for any changes specific to the RCF that you have installed.

15. Reapply any previous customizations to the switch configuration. Refer to Review cabling and configuration considerations for details of any further changes required.
16. After you verify the RCF versions, custom additions, and switch settings are correct, copy the running-config file to the startup-config file.

    For more information on Cisco commands, see the appropriate guide in the Cisco Nexus 9000 Series NX-OS Command Reference.

    ```
    cs1# copy running-config startup-config

    [] 100% Copy complete
    ```

17. Reboot switch cs1. You can ignore the “cluster switch health monitor” alerts and “cluster ports down” events reported on the nodes while the switch reboots.

    ```
    cs1# reload

    This command will reboot the system. (y/n)? [n] y
    ```

18. Verify the health of cluster ports on the cluster.
    a. Verify that cluster ports are up and healthy across all nodes in the cluster:

       ```
       network port show -ipspace cluster
       ```

Show example

```
cluster1::*> network port show -ipspace cluster

Node: cluster1-01

Ignore
                                                  Speed(Mbps)
Health   Health
Port      IPspace      Broadcast Domain Link MTU  Admin/Oper
Status   Status
--------- ------------ ---------------- ---- ---- -----------
-------- ------
e0a       Cluster      Cluster          up   9000  auto/10000
healthy  false
e0b       Cluster      Cluster          up   9000  auto/10000
healthy  false

Node: cluster1-02

Ignore
                                                  Speed(Mbps)
Health   Health
Port      IPspace      Broadcast Domain Link MTU  Admin/Oper
Status   Status
--------- ------------ ---------------- ---- ---- -----------
-------- ------
e0a       Cluster      Cluster          up   9000  auto/10000
healthy  false
e0b       Cluster      Cluster          up   9000  auto/10000
healthy  false

Node: cluster1-03

Ignore
                                                  Speed(Mbps)
Health   Health
Port      IPspace      Broadcast Domain Link MTU  Admin/Oper
Status   Status
--------- ------------ ---------------- ---- ---- -----------
-------- ------
e0a       Cluster      Cluster          up   9000  auto/100000
healthy false
e0d       Cluster      Cluster          up   9000  auto/100000
healthy false
```

```
Node: cluster1-04

Ignore
                                                          Speed(Mbps)
Health   Health
Port      IPspace      Broadcast Domain Link MTU  Admin/Oper
Status   Status
--------- ------------ ---------------- ---- ---- -----------
-------- ------
e0a       Cluster      Cluster          up   9000  auto/100000
healthy false
e0d       Cluster      Cluster          up   9000  auto/100000
healthy false
8 entries were displayed.
```

b. Verify the switch health from the cluster.

```
network device-discovery show -protocol cdp
```

Show example

```
cluster1::*> network device-discovery show -protocol cdp
Node/       Local  Discovered
Protocol    Port   Device (LLDP: ChassisID)  Interface
Platform
----------- ------ ------------------------- -----------------
--------
cluster1-01/cdp
            e0a    cs1                       Ethernet1/7
N9K-C9336C
            e0d    cs2                       Ethernet1/7
N9K-C9336C
cluster01-2/cdp
            e0a    cs1                       Ethernet1/8
N9K-C9336C
            e0d    cs2                       Ethernet1/8
N9K-C9336C
cluster01-3/cdp
            e0a    cs1                       Ethernet1/1/1
N9K-C9336C
            e0b    cs2                       Ethernet1/1/1
N9K-C9336C
cluster1-04/cdp
            e0a    cs1                       Ethernet1/1/2
N9K-C9336C
            e0b    cs2                       Ethernet1/1/2
N9K-C9336C

cluster1::*> system cluster-switch show -is-monitoring-enabled
-operational true
Switch                      Type               Address
Model
--------------------------- ------------------ ----------------
-----
cs1                         cluster-network    10.233.205.90
NX9-C9336C
     Serial Number: FOCXXXXXXGD
      Is Monitored: true
            Reason: None
  Software Version: Cisco Nexus Operating System (NX-OS)
Software, Version
                    9.3(5)
    Version Source: CDP

cs2                         cluster-network    10.233.205.91
```

```
NX9-C9336C
     Serial Number: FOCXXXXXXGS
      Is Monitored: true
            Reason: None
  Software Version: Cisco Nexus Operating System (NX-OS)
Software, Version
                    9.3(5)
    Version Source: CDP

2 entries were displayed.
```

You might observe the following output on the cs1 switch console depending on the RCF version previously loaded on the switch:

```
2020 Nov 17 16:07:18 cs1 %$ VDC-1 %$ %STP-2-UNBLOCK_CONSIST_PORT:
Unblocking port port-channel1 on VLAN0092. Port consistency
restored.
2020 Nov 17 16:07:23 cs1 %$ VDC-1 %$ %STP-2-BLOCK_PVID_PEER:
Blocking port-channel1 on VLAN0001. Inconsistent peer vlan.
2020 Nov 17 16:07:23 cs1 %$ VDC-1 %$ %STP-2-BLOCK_PVID_LOCAL:
Blocking port-channel1 on VLAN0092. Inconsistent local vlan.
```

19. Verify that the cluster is healthy:

    `cluster show`

    Show example

    ```
    cluster1::*> cluster show
    Node                 Health   Eligibility   Epsilon
    -------------------- -------- ------------- -------
    cluster1-01          true     true          false
    cluster1-02          true     true          false
    cluster1-03          true     true          true
    cluster1-04          true     true          false
    4 entries were displayed.
    cluster1::*>
    ```

20. Repeat steps 1 to 19 on switch cs2.
21. Enable auto-revert on the cluster LIFs.

    ```
    cluster1::*> network interface modify -vserver Cluster -lif * -auto-revert
    True
    ```

22. Perform a reboot of switch cs2.

```
cs2# reload

This command will reboot the system. (y/n)? [n] y
```

Step 3: Verify the cluster network configuration and cluster health

1. Verify that the switch ports connected to the cluster ports are **up**.

```
show interface brief
```

Show example

```
cs1# show interface brief | grep up
.
.
Eth1/1/1      1       eth  access up      none
10G(D) --
Eth1/1/2      1       eth  access up      none
10G(D) --
Eth1/7        1       eth  trunk  up      none
100G(D) --
Eth1/8        1       eth  trunk  up      none
100G(D) --
.
.
```

2. Verify that the expected nodes are still connected:

```
show cdp neighbors
```

Show example

```
cs1# show cdp neighbors

Capability Codes: R - Router, T - Trans-Bridge, B - Source-Route-
Bridge
                  S - Switch, H - Host, I - IGMP, r - Repeater,
                  V - VoIP-Phone, D - Remotely-Managed-Device,
                  s - Supports-STP-Dispute

Device-ID          Local Intrfce  Hldtme Capability  Platform
Port ID
node1              Eth1/1         133    H           FAS2980
e0a
node2              Eth1/2         133    H           FAS2980
e0a
cs1                Eth1/35        175    R S I s     N9K-C9336C
Eth1/35
cs1                Eth1/36        175    R S I s     N9K-C9336C
Eth1/36

Total entries displayed: 4
```

3. Verify that the cluster nodes are in their correct cluster VLANs using the following commands:

   `show vlan brief`

   `show interface trunk`

Show example

```
cs1# show vlan brief

VLAN Name                              Status    Ports
---- --------------------------------- ---------
-------------------------------
1    default                           active    Po1, Eth1/1, Eth1/2,
Eth1/3
                                                 Eth1/4, Eth1/5,
Eth1/6, Eth1/7
                                                 Eth1/8, Eth1/35,
Eth1/36
                                                 Eth1/9/1, Eth1/9/2,
Eth1/9/3
                                                 Eth1/9/4, Eth1/10/1,
Eth1/10/2
                                                 Eth1/10/3, Eth1/10/4
17   VLAN0017                          active    Eth1/1, Eth1/2,
Eth1/3, Eth1/4
                                                 Eth1/5, Eth1/6,
Eth1/7, Eth1/8
                                                 Eth1/9/1, Eth1/9/2,
Eth1/9/3
                                                 Eth1/9/4, Eth1/10/1,
Eth1/10/2
                                                 Eth1/10/3, Eth1/10/4
18   VLAN0018                          active    Eth1/1, Eth1/2,
Eth1/3, Eth1/4
                                                 Eth1/5, Eth1/6,
Eth1/7, Eth1/8
                                                 Eth1/9/1, Eth1/9/2,
Eth1/9/3
                                                 Eth1/9/4, Eth1/10/1,
Eth1/10/2
                                                 Eth1/10/3, Eth1/10/4
31   VLAN0031                          active    Eth1/11, Eth1/12,
Eth1/13
                                                 Eth1/14, Eth1/15,
Eth1/16
                                                 Eth1/17, Eth1/18,
Eth1/19
                                                 Eth1/20, Eth1/21,
Eth1/22
32   VLAN0032                          active    Eth1/23, Eth1/24,
Eth1/25
```

```
                                                  Eth1/26, Eth1/27,
Eth1/28
                                                  Eth1/29, Eth1/30,
Eth1/31
                                                  Eth1/32, Eth1/33,
Eth1/34
33   VLAN0033                         active    Eth1/11, Eth1/12,
Eth1/13
                                                  Eth1/14, Eth1/15,
Eth1/16
                                                  Eth1/17, Eth1/18,
Eth1/19
                                                  Eth1/20, Eth1/21,
Eth1/22
34   VLAN0034                         active    Eth1/23, Eth1/24,
Eth1/25
                                                  Eth1/26, Eth1/27,
Eth1/28
                                                  Eth1/29, Eth1/30,
Eth1/31
                                                  Eth1/32, Eth1/33,
Eth1/34

cs1# show interface trunk

----------------------------------------------------
Port          Native  Status        Port
              Vlan                  Channel
----------------------------------------------------
Eth1/1        1       trunking      --
Eth1/2        1       trunking      --
Eth1/3        1       trunking      --
Eth1/4        1       trunking      --
Eth1/5        1       trunking      --
Eth1/6        1       trunking      --
Eth1/7        1       trunking      --
Eth1/8        1       trunking      --
Eth1/9/1      1       trunking      --
Eth1/9/2      1       trunking      --
Eth1/9/3      1       trunking      --
Eth1/9/4      1       trunking      --
Eth1/10/1     1       trunking      --
Eth1/10/2     1       trunking      --
Eth1/10/3     1       trunking      --
Eth1/10/4     1       trunking      --
Eth1/11       33      trunking      --
```

```
Eth1/12       33      trunking      --
Eth1/13       33      trunking      --
Eth1/14       33      trunking      --
Eth1/15       33      trunking      --
Eth1/16       33      trunking      --
Eth1/17       33      trunking      --
Eth1/18       33      trunking      --
Eth1/19       33      trunking      --
Eth1/20       33      trunking      --
Eth1/21       33      trunking      --
Eth1/22       33      trunking      --
Eth1/23       34      trunking      --
Eth1/24       34      trunking      --
Eth1/25       34      trunking      --
Eth1/26       34      trunking      --
Eth1/27       34      trunking      --
Eth1/28       34      trunking      --
Eth1/29       34      trunking      --
Eth1/30       34      trunking      --
Eth1/31       34      trunking      --
Eth1/32       34      trunking      --
Eth1/33       34      trunking      --
Eth1/34       34      trunking      --
Eth1/35       1       trnk-bndl     Po1
Eth1/36       1       trnk-bndl     Po1
Po1           1       trunking      --

----------------------------------------------------------
Port          Vlans Allowed on Trunk
----------------------------------------------------------
Eth1/1        1,17-18
Eth1/2        1,17-18
Eth1/3        1,17-18
Eth1/4        1,17-18
Eth1/5        1,17-18
Eth1/6        1,17-18
Eth1/7        1,17-18
Eth1/8        1,17-18
Eth1/9/1      1,17-18
Eth1/9/2      1,17-18
Eth1/9/3      1,17-18
Eth1/9/4      1,17-18
Eth1/10/1     1,17-18
Eth1/10/2     1,17-18
Eth1/10/3     1,17-18
Eth1/10/4     1,17-18
```

```
Eth1/11       31,33
Eth1/12       31,33
Eth1/13       31,33
Eth1/14       31,33
Eth1/15       31,33
Eth1/16       31,33
Eth1/17       31,33
Eth1/18       31,33
Eth1/19       31,33
Eth1/20       31,33
Eth1/21       31,33
Eth1/22       31,33
Eth1/23       32,34
Eth1/24       32,34
Eth1/25       32,34
Eth1/26       32,34
Eth1/27       32,34
Eth1/28       32,34
Eth1/29       32,34
Eth1/30       32,34
Eth1/31       32,34
Eth1/32       32,34
Eth1/33       32,34
Eth1/34       32,34
Eth1/35       1
Eth1/36       1
Po1           1
..
..
..
..
..
```

For specific port and VLAN usage details, refer to the banner and important notes section in your RCF.

4. Verify that the ISL between cs1 and cs2 is functional:

```
show port-channel summary
```

Show example

```
cs1# show port-channel summary
Flags:  D - Down        P - Up in port-channel (members)
        I - Individual  H - Hot-standby (LACP only)
        s - Suspended   r - Module-removed
        b - BFD Session Wait
        S - Switched    R - Routed
        U - Up (port-channel)
        p - Up in delay-lacp mode (member)
        M - Not in use. Min-links not met
--------------------------------------------------------------------------
------------
Group Port-       Type     Protocol  Member Ports      Channel
--------------------------------------------------------------------------
------------
1     Po1(SU)     Eth      LACP      Eth1/35(P)        Eth1/36(P)
cs1#
```

5. Verify that the cluster LIFs have reverted to their home port:

   `network interface show -vserver cluster`

Show example

```
cluster1::*> network interface show -vserver cluster
            Logical            Status     Network            Current
Current Is
Vserver     Interface          Admin/Oper Address/Mask       Node
Port    Home
----------- ------------------ ---------- ------------------
------------------- ------- ----
Cluster
            cluster1-01_clus1  up/up      169.254.3.4/23
cluster1-01         e0d     true
            cluster1-01_clus2  up/up      169.254.3.5/23
cluster1-01         e0d     true
            cluster1-02_clus1  up/up      169.254.3.8/23
cluster1-02         e0d     true
            cluster1-02_clus2  up/up      169.254.3.9/23
cluster1-02         e0d     true
            cluster1-03_clus1  up/up      169.254.1.3/23
cluster1-03         e0b     true
            cluster1-03_clus2  up/up      169.254.1.1/23
cluster1-03         e0b     true
            cluster1-04_clus1  up/up      169.254.1.6/23
cluster1-04         e0b     true
            cluster1-04_clus2  up/up      169.254.1.7/23
cluster1-04         e0b     true
8 entries were displayed.
cluster1::*>
```

If any cluster LIFs have not returned to their home ports, revert them manually from the local node:

`network interface revert -vserver vserver_name -lif lif_name`

6. Verify that the cluster is healthy:

   `cluster show`

Show example

```
cluster1::*> cluster show
Node                  Health  Eligibility   Epsilon
--------------------- ------- ------------- -------
cluster1-01           true    true          false
cluster1-02           true    true          false
cluster1-03           true    true          true
cluster1-04           true    true          false
4 entries were displayed.
cluster1::*>
```

7. Verify the connectivity of the remote cluster interfaces:

ONTAP 9.9.1 and later

You can use the `network interface check cluster-connectivity` command to start an accessibility check for cluster connectivity and then display the details:

`network interface check cluster-connectivity start` and `network interface check cluster-connectivity show`

```
cluster1::*> network interface check cluster-connectivity start
```

NOTE: Wait for a number of seconds before running the `show` command to display the details.

```
cluster1::*> network interface check cluster-connectivity show
                                  Source               Destination
Packet
Node   Date                       LIF                  LIF
Loss
------ -------------------------- -------------------
------------------ -----------
node1
       3/5/2022 19:21:18 -06:00   cluster1-01_clus2    cluster1-02-
clus1   none
       3/5/2022 19:21:20 -06:00   cluster1-01_clus2    cluster1-
02_clus2   none
node2
       3/5/2022 19:21:18 -06:00   cluster1-02_clus2    cluster1-
01_clus1   none
       3/5/2022 19:21:20 -06:00   cluster1-02_clus2    cluster1-
01_clus2   none
```

All ONTAP releases

For all ONTAP releases, you can also use the `cluster ping-cluster -node <name>` command to check the connectivity:

```
cluster ping-cluster -node <name>
```

```
cluster1::*> cluster ping-cluster -node local
Host is cluster1-03
Getting addresses from network interface table...
Cluster cluster1-03_clus1 169.254.1.3 cluster1-03 e0a
Cluster cluster1-03_clus2 169.254.1.1 cluster1-03 e0b
Cluster cluster1-04_clus1 169.254.1.6 cluster1-04 e0a
Cluster cluster1-04_clus2 169.254.1.7 cluster1-04 e0b
Cluster cluster1-01_clus1 169.254.3.4 cluster1-01 e0a
Cluster cluster1-01_clus2 169.254.3.5 cluster1-01 e0d
Cluster cluster1-02_clus1 169.254.3.8 cluster1-02 e0a
Cluster cluster1-02_clus2 169.254.3.9 cluster1-02 e0d
Local = 169.254.1.3 169.254.1.1
Remote = 169.254.1.6 169.254.1.7 169.254.3.4 169.254.3.5 169.254.3.8
169.254.3.9
Cluster Vserver Id = 4294967293
Ping status:
............
Basic connectivity succeeds on 12 path(s)
Basic connectivity fails on 0 path(s)
................................................
Detected 9000 byte MTU on 12 path(s):
    Local 169.254.1.3 to Remote 169.254.1.6
    Local 169.254.1.3 to Remote 169.254.1.7
    Local 169.254.1.3 to Remote 169.254.3.4
    Local 169.254.1.3 to Remote 169.254.3.5
    Local 169.254.1.3 to Remote 169.254.3.8
    Local 169.254.1.3 to Remote 169.254.3.9
    Local 169.254.1.1 to Remote 169.254.1.6
    Local 169.254.1.1 to Remote 169.254.1.7
    Local 169.254.1.1 to Remote 169.254.3.4
    Local 169.254.1.1 to Remote 169.254.3.5
    Local 169.254.1.1 to Remote 169.254.3.8
    Local 169.254.1.1 to Remote 169.254.3.9
Larger than PMTU communication succeeds on 12 path(s)
RPC status:
6 paths up, 0 paths down (tcp check)
6 paths up, 0 paths down (udp check)
```

What's next?

After you've upgraded your RCF, you can verify the SSH configuration.

Verify your SSH configuration

If you are using the Ethernet Switch Health Monitor (CSHM) and log collection features,

verify that SSH and SSH keys are enabled on the cluster switches.

Steps

1. Verify that SSH is enabled:

```
(switch) show ssh server
ssh version 2 is enabled
```

2. Verify that the SSH keys are enabled:

```
show ssh key
```

Show example

```
(switch)# show ssh key

rsa Keys generated:Fri Jun 28 02:16:00 2024

ssh-rsa
AAAAB3NzaC1yc2EAAAADAQABAAAAgQDiNrD52Q586wTGJjFAbjBlFaA23EpDrZ2sDCew
l7nwlioC6HBejxluIObAH8hrW8kR+gj0ZAfPpNeLGTg3APj/yiPTBoIZZxbWRShywAM5
PqyxWwRb7kp9Zt1YHzVuHYpSO82KUDowKrL6lox/YtpKoZUDZjrZjAp8hTv3JZsPgQ==

bitcount:1024
fingerprint:
SHA256:aHwhpzo7+YCDSrp3isJv2uVGz+mjMMokqdMeXVVXfdo

could not retrieve dsa key information

ecdsa Keys generated:Fri Jun 28 02:30:56 2024

ecdsa-sha2-nistp521
AAAAE2VjZHNhLXNoYTItbmlzdHA1MjEAAAAIbmlzdHA1MjEAAACFBABJ+ZX5SFKhS57e
vkE273e0VoqZi4/32dt+f14fBuKv80MjMsmLfjKtCWy1wgVt1Zi+C5TIBbugpzez529z
kFSF0ADb8JaGCoaAYe2HvWR/f6QLbKbqVIewCdqWgxzrIY5BPP5GBdxQJMBiOwEdnHg1
u/9Pzh/Vz9cHDcCW9qGE780QHA==

bitcount:521
fingerprint:
SHA256:TFGe2hXn6QIpcs/vyHzftHJ7Dceg0vQaULYRAlZeHwQ

(switch)# show feature | include scpServer
scpServer             1          enabled
(switch)# show feature | include ssh
sshServer             1          enabled
(switch)#
```

When enabling FIPS, you must change the bitcount to 256 on the switch using the command `ssh key ecdsa 256 force`. See Configure network security using FIPS for more details.

What's next?

After you've verified your SSH configuration, you can configure switch health monitoring.

Reset 9336C-FX2 and 9336C-FX2-T cluster switches to factory defaults

To reset the 9336C-FX2 and 9336C-FX2-T cluster switches to factory defaults, you must

erase the 9336C-FX2 and 9336C-FX2-T switch settings.

About this task

- You must be connected to the switch using the serial console.
- This task resets the configuration of the management network.

Steps

1. Erase the existing configuration:

   `write erase`

   ```
   (cs2)# write erase

   Warning: This command will erase the startup-configuration.
   Do you wish to proceed anyway? (y/n) [n] y
   ```

2. Reload the switch software:

   `reload`

   ```
   (cs2)# reload

   This command will reboot the system. (y/n)? [n] y
   ```

   The system reboots and enters the configuration wizard. During the boot, if you receive the prompt “Abort Auto Provisioning and continue with normal setup? (yes/no)[n]”, you should respond **yes** to proceed.

What’s next

After you’ve reset your switches, you can reconfigure them as needed.

Migrate the switches

Migrate from NetApp CN1610 cluster switches to Cisco 9336C-FX2 and 9336C-FX2-T cluster switches

You can migrate NetApp CN1610 cluster switches for an ONTAP cluster to Cisco 9336C-FX2 and 9336C-FX2-T cluster switches. This is a nondisruptive procedure.

Review requirements

You must be aware of certain configuration information, port connections and cabling requirements when you are replacing NetApp CN1610 cluster switches with Cisco 9336C-FX2 and 9336C-FX2-T cluster switches. You must also verify the switch serial number to ensure that the correct switch is migrated.

Supported switches

The following cluster switches are supported:

- NetApp CN1610

- Cisco 9336C-FX2
- Cisco 9336C-FX2-T

For details of supported ports and their configurations, see the Hardware Universe. See What additional information do I need to install my equipment that is not in HWU? for more information about switch installation requirements.

What you'll need

Verify that your configuration meets the following requirements:

- The existing cluster is correctly set up and functioning.
- All cluster ports are in the **up** state to ensure nondisruptive operations.
- The Cisco 9336C-FX2 and 9336C-FX2-T cluster switches are configured and operating under the correct version of NX-OS installed with the reference configuration file (RCF) applied.
- The existing cluster network configuration has the following:
  - A redundant and fully functional NetApp cluster using NetApp CN1610 switches.
  - Management connectivity and console access to both the NetApp CN1610 switches and the new switches.
  - All cluster LIFs in the up state with the cluster LIFs are on their home ports.
- Some of the ports are configured on Cisco 9336C-FX2 and 9336C-FX2-T switches to run at 40GbE or 100GbE.
- You have planned, migrated, and documented 40GbE and 100GbE connectivity from nodes to Cisco 9336C-FX2 and 9336C-FX2-T cluster switches.

Migrate the switches

About the examples

The examples in this procedure use the following switch and node nomenclature:

- The existing CN1610 cluster switches are *C1* and *C2*.
- The new 9336C-FX2 cluster switches are *cs1* and *cs2*.
- The nodes are *node1* and *node2*.
- The cluster LIFs are *node1_clus1* and *node1_clus2* on node 1, and *node2_clus1* and *node2_clus2* on node 2 respectively.
- The `cluster1::*>` prompt indicates the name of the cluster.
- The cluster ports used in this procedure are *e3a* and *e3b*.

About this task

This procedure covers the following scenario:

- Switch C2 is replaced by switch cs2 first.
  - Shut down the ports to the cluster nodes. All ports must be shut down simultaneously to avoid cluster instability.
    - All cluster LIFs fail over to the new switch cs2.
  - The cabling between the nodes and C2 is then disconnected from C2 and reconnected to cs2.

- Switch C1 is replaced by switch cs1.
  - Shut down the ports to the cluster nodes. All ports must be shut down simultaneously to avoid cluster instability.
    - All cluster LIFs fail over to the new switch cs1.
  - The cabling between the nodes and C1 is then disconnected from C1 and reconnected to cs1.

> ⓘ No operational inter-switch link (ISL) is needed during this procedure. This is by design because RCF version changes can affect ISL connectivity temporarily. To ensure non-disruptive cluster operations, the following procedure fails over all of the cluster LIFs to the operational partner switch while performing the steps on the target switch.

Step 1: Prepare for migration

1. If AutoSupport is enabled on this cluster, suppress automatic case creation by invoking an AutoSupport message:

   ```
   system node autosupport invoke -node * -type all -message MAINT=xh
   ```

   where *x* is the duration of the maintenance window in hours.

2. Change the privilege level to advanced, entering **y** when prompted to continue:

   ```
   set -privilege advanced
   ```

   The advanced prompt (*>) appears.

3. Disable auto-revert on the cluster LIFs.

   By disabling auto-revert for this procedure, the cluster LIFs will not automatically move back to their home port. They remain on the current port while it continues to be up and operational.

   ```
   network interface modify -vserver Cluster -lif * -auto-revert false
   ```

Step 2: Configure ports and cabling

1. Determine the administrative or operational status for each cluster interface.

   Each port should display up for `Link` and `healthy` for `Health Status`.

   a. Display the network port attributes:

      ```
      network port show -ipspace Cluster
      ```

Show example

```
cluster1::*> network port show -ipspace Cluster

Node: node1

Ignore
                                                  Speed(Mbps)
Health   Health
Port      IPspace    Broadcast Domain Link MTU   Admin/Oper
Status   Status
--------- ---------- ---------------- ---- ----- ------------
-------- ------
e3a       Cluster    Cluster          up   9000  auto/100000
healthy  false
e3b       Cluster    Cluster          up   9000  auto/100000
healthy  false

Node: node2

Ignore
                                                  Speed(Mbps)
Health   Health
Port      IPspace    Broadcast Domain Link MTU   Admin/Oper
Status   Status
--------- ---------- ---------------- ---- ----- ------------
-------- ------
e3a       Cluster    Cluster          up   9000  auto/100000
healthy  false
e3b       Cluster    Cluster          up   9000  auto/100000
healthy  false
```

b. Display information about the LIFs and their designated home nodes:

`network interface show -vserver Cluster`

Each LIF should display `up/up` for `Status Admin/Oper` and `true` for `Is Home`.

Show example

```
cluster1::*> network interface show -vserver Cluster

            Logical      Status     Network            Current
Current Is
Vserver     Interface    Admin/Oper Address/Mask       Node
Port    Home
----------- -----------  ---------- ------------------
----------- ------- ----
Cluster
            node1_clus1  up/up      169.254.209.69/16  node1
e3a     true
            node1_clus2  up/up      169.254.49.125/16  node1
e3b     true
            node2_clus1  up/up      169.254.47.194/16  node2
e3a     true
            node2_clus2  up/up      169.254.19.183/16  node2
e3b     true
```

2. The cluster ports on each node are connected to existing cluster switches in the following way (from the nodes' perspective) using the command:

   `network device-discovery show -protocol`

   Show example

```
cluster1::*> network device-discovery show -protocol cdp
Node/       Local  Discovered
Protocol    Port   Device (LLDP: ChassisID)  Interface
Platform
----------- ------ ------------------------- ----------------
----------------
node1      /cdp
            e3a    C1 (6a:ad:4f:98:3b:3f)    0/1               -
            e3b    C2 (6a:ad:4f:98:4c:a4)    0/1               -
node2      /cdp
            e3a    C1 (6a:ad:4f:98:3b:3f)    0/2               -
            e3b    C2 (6a:ad:4f:98:4c:a4)    0/2               -
```

3. The cluster ports and switches are connected in the following way (from the switches' perspective) using the command:

   `show cdp neighbors`

Show example

```
C1# show cdp neighbors

Capability Codes: R - Router, T - Trans-Bridge, B - Source-Route-
Bridge
                  S - Switch, H - Host, I - IGMP, r - Repeater,
                  V - VoIP-Phone, D - Remotely-Managed-Device,
                  s - Supports-STP-Dispute

Device-ID             Local Intrfce Hldtme Capability  Platform
Port ID
node1                 Eth1/1        124    H           AFF-A400
e3a
node2                 Eth1/2        124    H           AFF-A400
e3a
C2                    0/13          179    S I s       CN1610
0/13
C2                    0/14          175    S I s       CN1610
0/14
C2                    0/15          179    S I s       CN1610
0/15
C2                    0/16          175    S I s       CN1610
0/16

C2# show cdp neighbors

Capability Codes: R - Router, T - Trans-Bridge, B - Source-Route-
Bridge
                  S - Switch, H - Host, I - IGMP, r - Repeater,
                  V - VoIP-Phone, D - Remotely-Managed-Device,
                  s - Supports-STP-Dispute


Device-ID             Local Intrfce Hldtme Capability  Platform
Port ID
node1                 Eth1/1        124    H           AFF-A400
e3b
node2                 Eth1/2        124    H           AFF-A400
e3b
C1                    0/13          175    S I s       CN1610
0/13
C1                    0/14          175    S I s       CN1610
0/14
C1                    0/15          175    S I s       CN1610
0/15
C1                    0/16          175    S I s       CN1610
0/16
```

4. Verify the connectivity of the remote cluster interfaces:

ONTAP 9.9.1 and later

You can use the `network interface check cluster-connectivity` command to start an accessibility check for cluster connectivity and then display the details:

`network interface check cluster-connectivity start` and `network interface check cluster-connectivity show`

```
cluster1::*> network interface check cluster-connectivity start
```

NOTE: Wait for a number of seconds before running the `show` command to display the details.

```
cluster1::*> network interface check cluster-connectivity show
                                  Source           Destination
Packet
Node   Date                       LIF              LIF
Loss
------ -------------------------- ---------------- ----------------
-----------
node1
       3/5/2022 19:21:18 -06:00   node1_clus2      node2-clus1
none
       3/5/2022 19:21:20 -06:00   node1_clus2      node2_clus2
none
node2
       3/5/2022 19:21:18 -06:00   node2_clus2      node1_clus1
none
       3/5/2022 19:21:20 -06:00   node2_clus2      node1_clus2
none
```

All ONTAP releases

For all ONTAP releases, you can also use the `cluster ping-cluster -node <name>` command to check the connectivity:

```
cluster ping-cluster -node <name>
```

```
cluster1::*> cluster ping-cluster -node local
Host is node2
Getting addresses from network interface table...
Cluster node1_clus1 169.254.209.69 node1     e3a
Cluster node1_clus2 169.254.49.125 node1     e3b
Cluster node2_clus1 169.254.47.194 node2     e3a
Cluster node2_clus2 169.254.19.183 node2     e3b
Local = 169.254.47.194 169.254.19.183
Remote = 169.254.209.69 169.254.49.125
Cluster Vserver Id = 4294967293
Ping status:....
Basic connectivity succeeds on 4 path(s)
Basic connectivity fails on 0 path(s)
................
Detected 9000 byte MTU on 4 path(s):
    Local 169.254.19.183 to Remote 169.254.209.69
    Local 169.254.19.183 to Remote 169.254.49.125
    Local 169.254.47.194 to Remote 169.254.209.69
    Local 169.254.47.194 to Remote 169.254.49.125
Larger than PMTU communication succeeds on 4 path(s)
RPC status:
2 paths up, 0 paths down (tcp check)
2 paths up, 0 paths down (udp check)
```

5. On switch C2, shut down the ports connected to the cluster ports of the nodes in order to fail over the cluster LIFs.

   Do not attempt to manually migrate the cluster LIFs.

```
(C2)# configure
(C2)(Config)# interface 0/1-0/12
(C2)(Interface 0/1-0/12)# shutdown
(C2)(Interface 0/1-0/12)# exit
(C2)(Config)# exit
```

6. Move the node cluster ports from the old switch C2 to the new switch cs2, using appropriate cabling supported by Cisco 9336C-FX2 and 9336C-FX2-T.
7. Display the network port attributes:

```
network port show -ipspace Cluster
```

Show example

```
cluster1::*> network port show -ipspace Cluster

Node: node1

Ignore
                                                  Speed(Mbps)  Health
Health
Port      IPspace    Broadcast Domain Link MTU   Admin/Oper   Status
Status
--------- ---------- ---------------- ---- ----- ------------
-------- ------
e3a       Cluster    Cluster          up   9000  auto/100000
healthy  false
e3b       Cluster    Cluster          up   9000  auto/100000
healthy  false

Node: node2

Ignore
                                                  Speed(Mbps)  Health
Health
Port      IPspace    Broadcast Domain Link MTU   Admin/Oper   Status
Status
--------- ---------- ---------------- ---- ----- ------------
-------- ------
e3a       Cluster    Cluster          up   9000  auto/100000
healthy  false
e3b       Cluster    Cluster          up   9000  auto/100000
healthy  false
```

8. The cluster ports on each node are now connected to cluster switches in the following way, from the nodes' perspective:

   `network device-discovery show -protocol`

Show example

```
cluster1::*> network device-discovery show -protocol cdp

Node/       Local  Discovered
Protocol    Port   Device (LLDP: ChassisID)  Interface
Platform
----------- ------ ------------------------- ----------------
----------------
node1      /cdp
            e3a    C1  (6a:ad:4f:98:3b:3f)   0/1
CN1610
            e3b    cs2 (b8:ce:f6:19:1a:7e)   Ethernet1/1/1     N9K-
C9336C-FX2
node2      /cdp
            e3a    C1  (6a:ad:4f:98:3b:3f)   0/2
CN1610
            e3b    cs2 (b8:ce:f6:19:1b:96)   Ethernet1/1/2     N9K-
C9336C-FX2
```

9. On switch cs2, verify that all node cluster ports are up:

   `network interface show -vserver Cluster`

Show example

```
cluster1::*> network interface show -vserver Cluster
            Logical      Status     Network            Current
Current Is
Vserver     Interfac     Admin/Oper Address/Mask       Node
Port    Home
----------- ------------ ---------- ------------------ -----------
------- ----
Cluster
            node1_clus1  up/up      169.254.3.4/16     node1
e0b     false
            node1_clus2  up/up      169.254.3.5/16     node1
e0b     true
            node2_clus1  up/up      169.254.3.8/16     node2
e0b     false
            node2_clus2  up/up      169.254.3.9/16     node2
e0b     true
```

10. On switch C1, shut down the ports connected to the cluster ports of the nodes in order to fail over the cluster LIFs.

```
(C1)# configure
(C1)(Config)# interface 0/1-0/12
(C1)(Interface 0/1-0/12)# shutdown
(C1)(Interface 0/1-0/12)# exit
(C1)(Config)# exit
```

11. Move the node cluster ports from the old switch C1 to the new switch cs1, using appropriate cabling supported by Cisco 9336C-FX2 and 9336C-FX2-T.
12. Verify the final configuration of the cluster:

    `network port show -ipspace Cluster`

    Each port should display `up` for `Link` and `healthy` for `Health Status`.

Show example

```
cluster1::*> network port show -ipspace Cluster

Node: node1

Ignore
                                                  Speed(Mbps)  Health
Health
Port      IPspace    Broadcast Domain Link MTU   Admin/Oper   Status
Status
--------- ---------- ---------------- ---- ----- ------------
-------- ------
e3a       Cluster    Cluster          up   9000  auto/100000
healthy  false
e3b       Cluster    Cluster          up   9000  auto/100000
healthy  false

Node: node2

Ignore
                                                  Speed(Mbps)  Health
Health
Port      IPspace    Broadcast Domain Link MTU   Admin/Oper   Status
Status
--------- ---------- ---------------- ---- ----- ------------
-------- ------
e3a       Cluster    Cluster          up   9000  auto/100000
healthy  false
e3b       Cluster    Cluster          up   9000  auto/100000
healthy  false
```

13. The cluster ports on each node are now connected to cluster switches in the following way, from the nodes' perspective:

    `network device-discovery show -protocol`

Show example

```
cluster1::*> network device-discovery show -protocol cdp

Node/       Local  Discovered
Protocol    Port   Device (LLDP: ChassisID)  Interface
Platform
----------- ------ ------------------------- --------------
----------------
node1      /cdp
            e3a    cs1 (b8:ce:f6:19:1a:7e)   Ethernet1/1/1   N9K-
C9336C-FX2
            e3b    cs2 (b8:ce:f6:19:1b:96)   Ethernet1/1/2   N9K-
C9336C-FX2
node2      /cdp
            e3a    cs1 (b8:ce:f6:19:1a:7e)   Ethernet1/1/1   N9K-
C9336C-FX2
            e3b    cs2 (b8:ce:f6:19:1b:96)   Ethernet1/1/2   N9K-
C9336C-FX2
```

14. On switches cs1 and cs2, verify that all node cluster ports are up:

    ```
    network port show -ipspace Cluster
    ```

Show example

```
cluster1::*> network port show -ipspace Cluster

Node: node1

Ignore
                                                  Speed(Mbps) Health
Health
Port      IPspace      Broadcast Domain Link MTU  Admin/Oper  Status
Status
--------- ------------ ---------------- ---- ---- -----------
-------- ------
e0a       Cluster      Cluster          up   9000  auto/10000
healthy  false
e0b       Cluster      Cluster          up   9000  auto/10000
healthy  false

Node: node2

Ignore
                                                  Speed(Mbps) Health
Health
Port      IPspace      Broadcast Domain Link MTU  Admin/Oper  Status
Status
--------- ------------ ---------------- ---- ---- -----------
-------- ------
e0a       Cluster      Cluster          up   9000  auto/10000
healthy  false
e0b       Cluster      Cluster          up   9000  auto/10000
healthy  false
```

15. Verify that both nodes each have one connection to each switch:

    `network device-discovery show -protocol`

Show example

The following example shows the appropriate results for both switches:

```
cluster1::*> network device-discovery show -protocol cdp
Node/       Local  Discovered
Protocol    Port   Device (LLDP: ChassisID)  Interface
Platform
----------- ------ ------------------------- --------------
--------------
node1      /cdp
            e0a    cs1 (b8:ce:f6:19:1b:42)   Ethernet1/1/1   N9K-
C9336C-FX2
            e0b    cs2 (b8:ce:f6:19:1b:96)   Ethernet1/1/2   N9K-
C9336C-FX2

node2      /cdp
            e0a    cs1 (b8:ce:f6:19:1b:42)   Ethernet1/1/1   N9K-
C9336C-FX2
            e0b    cs2 (b8:ce:f6:19:1b:96)   Ethernet1/1/2   N9K-
C9336C-FX2
```

Step 3: Verify the configuration

1. Enable auto-revert on the cluster LIFs:

   ```
   cluster1::*> network interface modify -vserver Cluster -lif * -auto-revert
   true
   ```

2. On switch cs2, shut down and restart all cluster ports to trigger an auto-revert of all cluster LIFs that are not on their home ports.

```
cs2> enable
cs2# configure
cs2(config)# interface eth1/1-1/2
cs2(config-if-range)# shutdown

(Wait for 5-10 seconds before re-enabling the ports)

cs2(config-if-range)# no shutdown

(After executing the no shutdown command, the nodes detect the change
and begin to auto-revert the cluster LIFs to their home ports)

cs2(config-if-range)# exit
cs2(config)# exit
cs2#
```

3. Verify that the cluster LIFs have reverted to their home ports (this might take a minute):

   `network interface show -vserver Cluster`

   If any of the cluster LIFs have not reverted to their home port, manually revert them. You must connect to each node-mgmt LIF or SP/BMC system console of the local node that owns the LIF:

   `network interface revert -vserver Cluster -lif *`

4. Verify that the cluster is healthy:

   `cluster show`

5. Verify the connectivity of the remote cluster interfaces:

ONTAP 9.9.1 and later

You can use the `network interface check cluster-connectivity` command to start an accessibility check for cluster connectivity and then display the details:

`network interface check cluster-connectivity start` and `network interface check cluster-connectivity show`

```
cluster1::*> network interface check cluster-connectivity start
```

Wait for a number of seconds before running the `show` command to display the details.

```
cluster1::*> network interface check cluster-connectivity show
                                  Source          Destination
Packet
Node   Date                       LIF             LIF
Loss
------ -------------------------- --------------- -----------------
-----------
node1
       3/5/2022 19:21:18 -06:00   node1_clus2      node2_clus1
none
       3/5/2022 19:21:20 -06:00   node1_clus2      node2_clus2
none

node2
       3/5/2022 19:21:18 -06:00   node2_clus2      node1_clus1
none
       3/5/2022 19:21:20 -06:00   node2_clus2      node1_clus2
none
```

All ONTAP releases

For all ONTAP releases, you can also use the `cluster ping-cluster -node <name>` command to check the connectivity:

```
cluster ping-cluster -node <name>
```

```
cluster1::*> cluster ping-cluster -node node2
Host is node2
Getting addresses from network interface table...
Cluster node1_clus1 169.254.209.69 node1     e0a
Cluster node1_clus2 169.254.49.125 node1     e0b
Cluster node2_clus1 169.254.47.194 node2     e0a
Cluster node2_clus2 169.254.19.183 node2     e0b
Local = 169.254.47.194 169.254.19.183
Remote = 169.254.209.69 169.254.49.125
Cluster Vserver Id = 4294967293
Ping status:

Basic connectivity succeeds on 4 path(s)
Basic connectivity fails on 0 path(s)
................
Detected 9000 byte MTU on 4 path(s):
    Local 169.254.19.183 to Remote 169.254.209.69
    Local 169.254.19.183 to Remote 169.254.49.125
    Local 169.254.47.194 to Remote 169.254.209.69
    Local 169.254.47.194 to Remote 169.254.49.125
Larger than PMTU communication succeeds on 4 path(s)
RPC status:
2 paths up, 0 paths down (tcp check)
2 paths up, 0 paths down (udp check)
```

6. Change the privilege level back to admin:

```
set -privilege admin
```

7. If you suppressed automatic case creation, re-enable it by invoking an AutoSupport message:

```
system node autosupport invoke -node * -type all -message MAINT=END
```

What's next?

After you've migrated your switches, you can configure switch health monitoring.

Migrate from older Cisco switches to Cisco Nexus 9336C-FX2 and 9336C-FX2-T switches

You can perform a nondisruptive migration from older Cisco cluster switches to Cisco Nexus 9336C-FX2 and 9336C-FX2-T cluster network switches.

Review requirements

Ensure that:

- You have verified the switch serial number to ensure that the correct switch is migrated.

- Some of the ports on Nexus 9336C-FX2 switches are configured to run at 10GbE or 40GbE.
- The 10GbE and 40GbE connectivity from nodes to Nexus 9336C-FX2 cluster switches have been planned, migrated, and documented.
- The cluster is fully functioning (there should be no errors in the logs or similar issues).
- Initial customization of the Cisco Nexus 9336C-FX2 switches is complete, so that:
  - 9336C-FX2 switches are running the latest recommended version of software.
  - Confirm that Reference Configuration Files (RCFs) have been fully applied to any new switches before migrating the LIFs to the new switches.
  - Check the running and startup configurations on both switches prior to shifting network traffic.
  - Any site customization, such as DNS, NTP, SMTP, SNMP, and SSH, are configured on the new switches.
- You have access to the switch compatibility table on the Cisco Ethernet Switches page for the supported ONTAP, NX-OS, and RCF versions.
- You have reviewed the appropriate software and upgrade guides available on the Cisco web site for the Cisco switch upgrade and downgrade procedures at Cisco Nexus 9000 Series Switches Support page.

If you are changing the port speed of the e0a and e1a cluster ports on AFF A800 or AFF C800 systems, you might observe malformed packets being received after the speed conversion. See Bug 1570339 and the Knowledge Base article CRC errors on T6 ports after converting from 40GbE to 100GbE for guidance.

Migrate the switches

About the examples

The examples in this procedure use two nodes. These nodes use two 10GbE cluster interconnect ports e0a and e0b. See the Hardware Universe to verify the correct cluster ports on your platforms. See What additional information do I need to install my equipment that is not in HWU? for more information about switch installation requirements.

The command outputs might vary depending on the different releases of ONTAP.

The examples in this procedure use the following switch and node nomenclature:

- The names of the existing two Cisco switches are **cs1** and **cs2**
- The new Nexus 9336C-FX2 cluster switches are **cs1-new** and **cs2-new**.
- The node names are **node1** and **node2**.
- The cluster LIF names are **node1_clus1** and **node1_clus2** for node 1, and **node2_clus1** and **node2_clus2** for node 2.
- The **cluster1::**>* prompt indicates the name of the cluster.

During this procedure, refer to the following example:

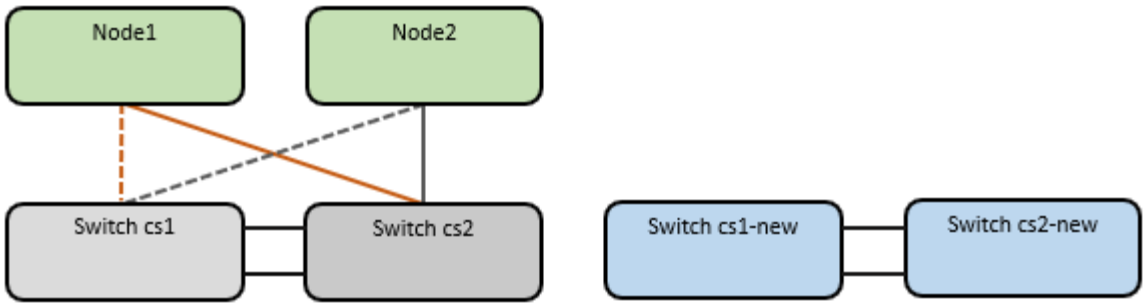

About this task

The procedure requires the use of both ONTAP commands and Nexus 9000 Series Switches commands; ONTAP commands are used, unless otherwise indicated.

This procedure covers the following scenario:

- Switch cs2 is replaced by switch cs2-new first.
  - Shut down the ports to the cluster nodes. All ports must be shut down simultaneously to avoid cluster instability.
    - All cluster LIFs fail over to the new switch cs2-new.
  - Cabling between the nodes and cs2 are then disconnected from cs2 and reconnected to cs2-new.
- Switch cs1 is replaced by switch cs1-new.
  - Shut down the ports to the cluster nodes. All ports must be shut down simultaneously to avoid cluster instability.
    - All cluster LIFs fail over to the new switch cs1-new.
  - Cabling between the nodes and cs1 are then disconnected from cs1 and reconnected to cs1-new.

No operational inter-switch link (ISL) is needed during this procedure. This is by design because RCF version changes can affect ISL connectivity temporarily. To ensure non-disruptive cluster operations, the following procedure fails over all of the cluster LIFs to the operational partner switch while performing the steps on the target switch.

Step 1: Prepare for migration

1. If AutoSupport is enabled on this cluster, suppress automatic case creation by invoking an AutoSupport message: `system node autosupport invoke -node * -type all -message MAINT=xh`

   where *x* is the duration of the maintenance window in hours.

   The AutoSupport message notifies technical support of this maintenance task so that automatic case creation is suppressed during the maintenance window.

2. Change the privilege level to advanced, entering **y** when prompted to continue:

   ```
   set -privilege advanced
   ```

   The advanced prompt (*>) appears.

Step 2: Configure ports and cabling

1. On the new switches, confirm that the ISL is cabled and healthy between the switches cs1-new and cs2-new:

   ```
   show port-channel summary
   ```

   Show example

   ```
   cs1-new# show port-channel summary
   Flags:  D - Down        P - Up in port-channel (members)
           I - Individual  H - Hot-standby (LACP only)
           s - Suspended   r - Module-removed
           b - BFD Session Wait
           S - Switched    R - Routed
           U - Up (port-channel)
           p - Up in delay-lacp mode (member)
           M - Not in use. Min-links not met
   ------------------------------------------------------------------------
   ------------
   Group Port-       Type     Protocol  Member Ports
         Channel
   ------------------------------------------------------------------------
   ------------
   1     Po1(SU)     Eth      LACP      Eth1/35(P)   Eth1/36(P)

   cs2-new# show port-channel summary
   Flags:  D - Down        P - Up in port-channel (members)
           I - Individual  H - Hot-standby (LACP only)
           s - Suspended   r - Module-removed
           b - BFD Session Wait
           S - Switched    R - Routed
           U - Up (port-channel)
           p - Up in delay-lacp mode (member)
           M - Not in use. Min-links not met
   ------------------------------------------------------------------------
   ------------
   Group Port-       Type     Protocol  Member Ports
         Channel
   ------------------------------------------------------------------------
   ------------
   1     Po1(SU)     Eth      LACP      Eth1/35(P)   Eth1/36(P)
   ```

2. Display the cluster ports on each node that are connected to the existing cluster switches:

   ```
   network device-discovery show
   ```

Show example

```
cluster1::*> network device-discovery show -protocol cdp
Node/       Local  Discovered
Protocol    Port   Device (LLDP: ChassisID)  Interface
Platform
----------- ------ ------------------------- ----------------
----------------
node1      /cdp
            e0a    cs1                       Ethernet1/1        N5K-
C5596UP
            e0b    cs2                       Ethernet1/2        N5K-
C5596UP
node2      /cdp
            e0a    cs1                       Ethernet1/1        N5K-
C5596UP
            e0b    cs2                       Ethernet1/2        N5K-
C5596UP
```

3. Determine the administrative or operational status for each cluster port.
   a. Verify that all the cluster ports are up with a healthy status:

      ```
      network port show -ipspace Cluster
      ```

Show example

```
cluster1::*> network port show -ipspace Cluster

Node: node1

Ignore
                                                        Speed(Mbps)
Health   Health
Port      IPspace      Broadcast Domain Link MTU  Admin/Oper
Status   Status
--------- ------------ ---------------- ---- ---- -----------
-------- ------
e0a       Cluster      Cluster          up   9000  auto/10000
healthy  false
e0b       Cluster      Cluster          up   9000  auto/10000
healthy  false

Node: node2

Ignore
                                                        Speed(Mbps)
Health   Health
Port      IPspace      Broadcast Domain Link MTU  Admin/Oper
Status   Status
--------- ------------ ---------------- ---- ---- -----------
-------- ------
e0a       Cluster      Cluster          up   9000  auto/10000
healthy  false
e0b       Cluster      Cluster          up   9000  auto/10000
healthy  false
```

b. Verify that all the cluster interfaces (LIFs) are on their home ports:

```
network interface show -vserver Cluster
```

Show example

```
cluster1::*> network interface show -vserver Cluster

            Logical      Status     Network            Current
Current Is
Vserver     Interface    Admin/Oper Address/Mask       Node
Port    Home
----------- -----------  ---------- ------------------
----------- ------- ----
Cluster
            node1_clus1  up/up      169.254.209.69/16  node1
e0a     true
            node1_clus2  up/up      169.254.49.125/16  node1
e0b     true
            node2_clus1  up/up      169.254.47.194/16  node2
e0a     true
            node2_clus2  up/up      169.254.19.183/16  node2
e0b     true
```

c. Verify that the cluster displays information for both cluster switches:

```
system cluster-switch show -is-monitoring-enabled-operational true
```

Show example

```
cluster1::*> system cluster-switch show -is-monitoring-enabled
-operational true
Switch                        Type               Address
Model
----------------------------- ------------------ ----------------
---------------
cs1                           cluster-network    10.233.205.92
N5K-C5596UP
      Serial Number: FOXXXXXXXGS
       Is Monitored: true
             Reason: None
   Software Version: Cisco Nexus Operating System (NX-OS)
Software, Version
                     9.3(4)
     Version Source: CDP

cs2                           cluster-network     10.233.205.93
N5K-C5596UP
      Serial Number: FOXXXXXXXGD
       Is Monitored: true
             Reason: None
   Software Version: Cisco Nexus Operating System (NX-OS)
Software, Version
                     9.3(4)
     Version Source: CDP
```

4. Disable auto-revert on the cluster LIFs.

   By disabling auto-revert for this procedure, the cluster LIFs will not automatically move back to their home port. They remain on the current port while it continues to be up and operational.

   ```
   network interface modify -vserver Cluster -lif * -auto-revert false
   ```

   Disabling auto-revert ensures ONTAP only fails over the cluster LIFs when the switch ports are shutdown later.

5. On cluster switch cs2, shut down the ports connected to the cluster ports of **all** the nodes in order to fail over the cluster LIFs:

```
cs2# configure
cs2(config)# interface eth1/1-1/2
cs2(config-if-range)# shutdown
cs2(config-if-range)# exit
cs2(config)# exit
cs2#
```

6. Verify that the cluster LIFs have failed over to the ports hosted on cluster switch cs1. This might take a few seconds.

   `network interface show -vserver Cluster`

   Show example

```
cluster1::*> network interface show -vserver Cluster
            Logical       Status     Network            Current
Current Is
Vserver     Interface     Admin/Oper Address/Mask       Node
Port    Home
----------- ------------- ---------- ------------------ ----------
------- ----
Cluster
            node1_clus1   up/up      169.254.3.4/16     node1
e0a     true
            node1_clus2   up/up      169.254.3.5/16     node1
e0a     false
            node2_clus1   up/up      169.254.3.8/16     node2
e0a     true
            node2_clus2   up/up      169.254.3.9/16     node2
e0a     false
```

7. Verify that the cluster is healthy:

   `cluster show`

   Show example

```
cluster1::*> cluster show
Node       Health  Eligibility   Epsilon
---------- ------- ------------- -------
node1      true    true          false
node2      true    true          false
```

8. If the cluster LIFs have failed over to switch cs1 and the cluster is healthy, go to Step. 10. If some cluster LIFs are not healthy or the cluster is unhealthy, you can roll back the connectivity to the switch cs2, as follows:

   a. Bring up the ports connected to the cluster ports of **all** the nodes:

```
cs2# configure
cs2(config)# interface eth1/1-1/2
cs2(config-if-range)# no shutdown
cs2(config-if-range)# exit
cs2(config)# exit
cs2#
```

   b. Verify that the cluster LIFs have failed over to the ports hosted on cluster switch cs1. This might take a few seconds.

```
network interface show -vserver Cluster
```

Show example

```
cluster1::*> network interface show -vserver Cluster
            Logical       Status     Network            Current
Current Is
Vserver     Interface     Admin/Oper Address/Mask       Node
Port    Home
----------- ------------- ---------- ------------------
---------- ------- ----
Cluster
            node1_clus1   up/up      169.254.3.4/16     node1
e0a     true
            node1_clus2   up/up      169.254.3.5/16     node1
e0a     false
            node2_clus1   up/up      169.254.3.8/16     node2
e0a     true
            node2_clus2   up/up      169.254.3.9/16     node2
e0a     false
```

   c. Verify that the cluster is healthy:

```
cluster show
```

Show example

```
cluster1::*> cluster show
Node       Health  Eligibility   Epsilon
---------- ------- ------------- -------
node1      true    true          false
node2      true    true          false
```

9. Once you have restored LIF and cluster health, restart the process from Step. 4.
10. Move all cluster node connection cables from the old cs2 switch to the new cs2-new switch.

Cluster node connection cables moved to the cs2-new switch

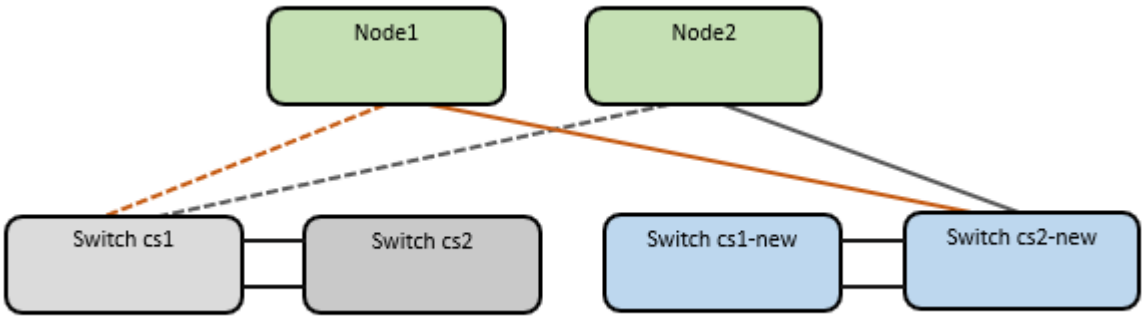

11. Confirm the health of the network connections moved to cs2-new:

```
network port show -ipspace Cluster
```

Show example

```
cluster1::*> network port show -ipspace Cluster

Node: node1

Ignore
                                                  Speed(Mbps) Health
Health
Port      IPspace      Broadcast Domain Link MTU  Admin/Oper  Status
Status
--------- ------------ ---------------- ---- ---- -----------
-------- ------
e0a       Cluster      Cluster          up   9000  auto/10000
healthy  false
e0b       Cluster      Cluster          up   9000  auto/10000
healthy  false

Node: node2

Ignore
                                                  Speed(Mbps) Health
Health
Port      IPspace      Broadcast Domain Link MTU  Admin/Oper  Status
Status
--------- ------------ ---------------- ---- ---- -----------
-------- ------
e0a       Cluster      Cluster          up   9000  auto/10000
healthy  false
e0b       Cluster      Cluster          up   9000  auto/10000
healthy  false
```

All cluster ports that were moved should be up.

12. Check neighbor information on the cluster ports:

    `network device-discovery show -protocol cdp`

Show example

```
cluster1::*> network device-discovery show -protocol cdp

Node/       Local  Discovered
Protocol    Port   Device (LLDP: ChassisID)  Interface      Platform
----------- ------ ------------------------- -------------
--------------
node1      /cdp
            e0a    cs1                       Ethernet1/1    N5K-
C5596UP
            e0b    cs2-new                   Ethernet1/1/1  N9K-
C9336C-FX2

node2      /cdp
            e0a    cs1                       Ethernet1/2    N5K-
C5596UP
            e0b    cs2-new                   Ethernet1/1/2  N9K-
C9336C-FX2
```

Verify that the moved cluster ports see the cs2-new switch as the neighbor.

13. Confirm the switch port connections from switch cs2-new's perspective:

```
cs2-new# show interface brief
cs2-new# show cdp neighbors
```

14. On cluster switch cs1, shut down the ports connected to the cluster ports of **all** the nodes in order to fail over the cluster LIFs.

```
cs1# configure
cs1(config)# interface eth1/1-1/2
cs1(config-if-range)# shutdown
cs1(config-if-range)# exit
cs1(config)# exit
cs1#
```

All cluster LIFs fail over to the cs2-new switch.

15. Verify that the cluster LIFs have failed over to the ports hosted on switch cs2-new. This might take a few seconds:

```
network interface show -vserver Cluster
```

Show example

```
cluster1::*> network interface show -vserver Cluster
            Logical      Status     Network            Current
Current Is
Vserver     Interfac     Admin/Oper Address/Mask       Node
Port    Home
----------- ------------ ---------- ------------------ -----------
------- ----
Cluster
            node1_clus1  up/up      169.254.3.4/16     node1
e0b     false
            node1_clus2  up/up      169.254.3.5/16     node1
e0b     true
            node2_clus1  up/up      169.254.3.8/16     node2
e0b     false
            node2_clus2  up/up      169.254.3.9/16     node2
e0b     true
```

16. Verify that the cluster is healthy:

    `cluster show`

    Show example

    ```
    cluster1::*> cluster show
    Node       Health  Eligibility   Epsilon
    ---------- ------- ------------- -------
    node1      true    true          false
    node2      true    true          false
    ```

17. Move the cluster node connection cables from cs1 to the new cs1-new switch.

    Cluster node connection cables moved to the cs1-new switch

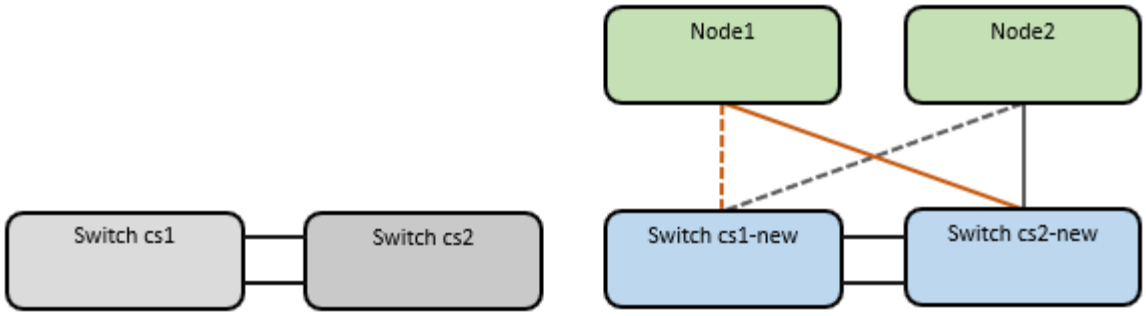

18. Confirm the health of the network connections moved to cs1-new:

    `network port show -ipspace Cluster`

    Show example

```
cluster1::*> network port show -ipspace Cluster

Node: node1

Ignore
                                                  Speed(Mbps) Health
Health
Port      IPspace      Broadcast Domain Link MTU  Admin/Oper  Status
Status
--------- ------------ ---------------- ---- ---- -----------
-------- ------
e0a       Cluster      Cluster          up   9000  auto/10000
healthy  false
e0b       Cluster      Cluster          up   9000  auto/10000
healthy  false

Node: node2

Ignore
                                                  Speed(Mbps) Health
Health
Port      IPspace      Broadcast Domain Link MTU  Admin/Oper  Status
Status
--------- ------------ ---------------- ---- ---- -----------
-------- ------
e0a       Cluster      Cluster          up   9000  auto/10000
healthy  false
e0b       Cluster      Cluster          up   9000  auto/10000
healthy  false
```

All cluster ports that were moved should be up.

19. Check neighbor information on the cluster ports:

    `network device-discovery show`

    Show example

    ```
    cluster1::*> network device-discovery show -protocol cdp
    Node/       Local  Discovered
    Protocol    Port   Device (LLDP: ChassisID)  Interface
    Platform
    ----------- ------ ------------------------- --------------
    --------------
    node1      /cdp
                e0a    cs1-new                   Ethernet1/1/1   N9K-
    C9336C-FX2
                e0b    cs2-new                   Ethernet1/1/2   N9K-
    C9336C-FX2

    node2      /cdp
                e0a    cs1-new                   Ethernet1/1/1   N9K-
    C9336C-FX2
                e0b    cs2-new                   Ethernet1/1/2   N9K-
    C9336C-FX2
    ```

    Verify that the moved cluster ports see the cs1-new switch as the neighbor.

20. Confirm the switch port connections from switch cs1-new's perspective:

    ```
    cs1-new# show interface brief
    cs1-new# show cdp neighbors
    ```

21. Verify that the ISL between cs1-new and cs2-new is still operational:

    `show port-channel summary`

Show example

```
cs1-new# show port-channel summary
Flags:  D - Down        P - Up in port-channel (members)
        I - Individual  H - Hot-standby (LACP only)
        s - Suspended   r - Module-removed
        b - BFD Session Wait
        S - Switched    R - Routed
        U - Up (port-channel)
        p - Up in delay-lacp mode (member)
        M - Not in use. Min-links not met
--------------------------------------------------------------------------
------------
Group Port-       Type     Protocol  Member Ports
      Channel
--------------------------------------------------------------------------
------------
1     Po1(SU)     Eth      LACP      Eth1/35(P)   Eth1/36(P)

cs2-new# show port-channel summary
Flags:  D - Down        P - Up in port-channel (members)
        I - Individual  H - Hot-standby (LACP only)
        s - Suspended   r - Module-removed
        b - BFD Session Wait
        S - Switched    R - Routed
        U - Up (port-channel)
        p - Up in delay-lacp mode (member)
        M - Not in use. Min-links not met
--------------------------------------------------------------------------
------------
Group Port-       Type     Protocol  Member Ports
      Channel
--------------------------------------------------------------------------
------------
1     Po1(SU)     Eth      LACP      Eth1/35(P)   Eth1/36(P)
```

Step 3: Verify the configuration

1. Enable auto-revert on the cluster LIFs.

   ```
   network interface modify -vserver Cluster -lif * -auto-revert true
   ```

2. On switch cs2, shut down and restart all cluster ports to trigger an auto-revert of all cluster LIFs that are not on their home ports.

```
cs2> enable
cs2# configure
cs2(config)# interface eth1/1-1/2
cs2(config-if-range)# shutdown

(Wait for 5-10 seconds before re-enabling the ports)

cs2(config-if-range)# no shutdown

(After executing the no shutdown command, the nodes detect the change
and begin to auto-revert the cluster LIFs to their home ports)

cs2(config-if-range)# exit
cs2(config)# exit
cs2#
```

3. Verify that the cluster LIFs have reverted to their home ports (this might take a minute):

   `network interface show -vserver Cluster`

   If any of the cluster LIFs have not reverted to their home port, manually revert them. You must connect to each node-mgmt LIF or SP/BMC system console of the local node that owns the LIF:

   `network interface revert -vserver Cluster -lif *`

4. Verify that the cluster is healthy:

   `cluster show`

5. Verify the connectivity of the remote cluster interfaces:

ONTAP 9.9.1 and later

You can use the `network interface check cluster-connectivity` command to start an accessibility check for cluster connectivity and then display the details:

`network interface check cluster-connectivity start` and `network interface check cluster-connectivity show`

```
cluster1::*> network interface check cluster-connectivity start
```

Wait for a number of seconds before running the `show` command to display the details.

```
cluster1::*> network interface check cluster-connectivity show
                                  Source           Destination
Packet
Node   Date                       LIF              LIF
Loss
------ -------------------------- ---------------  -----------------
-----------
node1
       3/5/2022 19:21:18 -06:00   node1_clus2      node2_clus1
none
       3/5/2022 19:21:20 -06:00   node1_clus2      node2_clus2
none

node2
       3/5/2022 19:21:18 -06:00   node2_clus2      node1_clus1
none
       3/5/2022 19:21:20 -06:00   node2_clus2      node1_clus2
none
```

All ONTAP releases

For all ONTAP releases, you can also use the `cluster ping-cluster -node <name>` command to check the connectivity:

```
cluster ping-cluster -node <name>
```

```
cluster1::*> cluster ping-cluster -node node2
Host is node2
Getting addresses from network interface table...
Cluster node1_clus1 169.254.209.69 node1     e0a
Cluster node1_clus2 169.254.49.125 node1     e0b
Cluster node2_clus1 169.254.47.194 node2     e0a
Cluster node2_clus2 169.254.19.183 node2     e0b
Local = 169.254.47.194 169.254.19.183
Remote = 169.254.209.69 169.254.49.125
Cluster Vserver Id = 4294967293
Ping status:

Basic connectivity succeeds on 4 path(s)
Basic connectivity fails on 0 path(s)
................
Detected 9000 byte MTU on 4 path(s):
    Local 169.254.19.183 to Remote 169.254.209.69
    Local 169.254.19.183 to Remote 169.254.49.125
    Local 169.254.47.194 to Remote 169.254.209.69
    Local 169.254.47.194 to Remote 169.254.49.125
Larger than PMTU communication succeeds on 4 path(s)
RPC status:
2 paths up, 0 paths down (tcp check)
2 paths up, 0 paths down (udp check)
```

6. If you suppressed automatic case creation, reenable it by invoking an AutoSupport message: `system node autosupport invoke -node * -type all -message MAINT=END`

What's next?

After you've migrated the switches, you can configure switch health monitoring.

Migrate to two-node switched cluster

If you have an existing two-node *switchless* cluster environment, you can migrate to a two-node *switched* cluster environment using Cisco Nexus 9336C-FX2 and 9336C-FX2-T switches.

The migration process works for all nodes using optical or Twinax ports, but is not supported on this switch if nodes are using onboard 10Gb BASE-T RJ45 ports for the cluster-network ports.

Review requirements

What you'll need

- For the two-node switchless configuration:
  - The two-node switchless configuration is properly set up and functioning.

- All cluster ports are in the **up** state.
- All cluster logical interfaces (LIFs) are in the **up** state and on their home ports.
- See Hardware Universe for all supported ONTAP versions.

- For the Cisco Nexus 9336C-FX2 switch configuration:
  - Both switches have management network connectivity.
  - There is console access to the cluster switches.
  - Nexus 9336C-FX2 node-to-node switch and switch-to-switch connections use Twinax or fiber cables.

    See Hardware Universe for more information about cabling.

- Inter-Switch Link (ISL) cables are connected to ports 1/35 and 1/36 on both 9336C-FX2 switches.
- Initial customization of both the 9336C-FX2 switches are completed, so that:
  - 9336C-FX2 switches are running the latest version of software.
  - Reference Configuration Files (RCFs) are applied to the switches.
    Any site customization, such as SMTP, SNMP, and SSH, is configured on the new switches.

About the examples

The examples in this procedure use the following cluster switch and node nomenclature:

- The names of the 9336C-FX2 switches are cs1 and cs2.
- The names of the cluster SVMs are node1 and node2.
- The names of the LIFs are node1_clus1 and node1_clus2 on node 1, and node2_clus1 and node2_clus2 on node 2 respectively.
- The `cluster1::*>` prompt indicates the name of the cluster.
- The cluster ports used in this procedure are e0a and e0b.

See Hardware Universe for information about the cluster ports for your platforms. See What additional information do I need to install my equipment that is not in HWU? for more information about switch installation requirements.

Migrate the switches

Step 1: Prepare for migration

1. If AutoSupport is enabled on this cluster, suppress automatic case creation by invoking an AutoSupport message:

   ```
   system node autosupport invoke -node * -type all -message MAINT=xh
   ```

   where x is the duration of the maintenance window in hours.

   > The AutoSupport message notifies technical support of this maintenance task so that automatic case creation is suppressed during the maintenance window.

2. Change the privilege level to advanced, entering `y` when prompted to continue:

   ```
   set -privilege advanced
   ```

The advanced prompt (`*>`) appears.

Step 2: Configure ports and cabling

1. Disable all node-facing ports (not ISL ports) on both the new cluster switches cs1 and cs2.

   Do not disable the ISL ports.

   Show example

   The following example shows that node-facing ports 1 through 34 are disabled on switch cs1:

   ```
   cs1# config
   Enter configuration commands, one per line. End with CNTL/Z.
   cs1(config)# interface e1/1/1-4, e1/2/1-4, e1/3/1-4, e1/4/1-4,
   e1/5/1-4, e1/6/1-4, e1/7-34
   cs1(config-if-range)# shutdown
   ```

2. Verify that the ISL and the physical ports on the ISL between the two 9336C-FX2 switches cs1 and cs2 are up on ports 1/35 and 1/36:

   ```
   show port-channel summary
   ```

Show example

The following example shows that the ISL ports are up on switch cs1:

```
cs1# show port-channel summary

Flags:  D - Down        P - Up in port-channel (members)
        I - Individual  H - Hot-standby (LACP only)
        s - Suspended   r - Module-removed
        b - BFD Session Wait
        S - Switched    R - Routed
        U - Up (port-channel)
        p - Up in delay-lacp mode (member)
        M - Not in use. Min-links not met
--------------------------------------------------------------------------
------------
Group Port-       Type     Protocol  Member Ports
      Channel
--------------------------------------------------------------------------
------------
1     Po1(SU)     Eth      LACP      Eth1/35(P)   Eth1/36(P)
```

The following example shows that the ISL ports are up on switch cs2:

```
(cs2)# show port-channel summary

Flags:  D - Down        P - Up in port-channel (members)
        I - Individual  H - Hot-standby (LACP only)
        s - Suspended   r - Module-removed
        b - BFD Session Wait
        S - Switched    R - Routed
        U - Up (port-channel)
        p - Up in delay-lacp mode (member)
        M - Not in use. Min-links not met
--------------------------------------------------------------------------
------------
Group Port-       Type     Protocol  Member Ports
      Channel
--------------------------------------------------------------------------
------------
1     Po1(SU)     Eth      LACP      Eth1/35(P)   Eth1/36(P)
```

3. Display the list of neighboring devices:

`show cdp neighbors`

This command provides information about the devices that are connected to the system.

Show example

The following example lists the neighboring devices on switch cs1:

```
cs1# show cdp neighbors

Capability Codes: R - Router, T - Trans-Bridge, B - Source-Route-
Bridge
                  S - Switch, H - Host, I - IGMP, r - Repeater,
                  V - VoIP-Phone, D - Remotely-Managed-Device,
                  s - Supports-STP-Dispute

Device-ID          Local Intrfce  Hldtme Capability  Platform
Port ID
cs2                Eth1/35        175    R S I s     N9K-C9336C
Eth1/35
cs2                Eth1/36        175    R S I s     N9K-C9336C
Eth1/36

Total entries displayed: 2
```

The following example lists the neighboring devices on switch cs2:

```
cs2# show cdp neighbors

Capability Codes: R - Router, T - Trans-Bridge, B - Source-Route-
Bridge
                  S - Switch, H - Host, I - IGMP, r - Repeater,
                  V - VoIP-Phone, D - Remotely-Managed-Device,
                  s - Supports-STP-Dispute

Device-ID          Local Intrfce  Hldtme Capability  Platform
Port ID
cs1                Eth1/35        177    R S I s     N9K-C9336C
Eth1/35
cs1                Eth1/36        177    R S I s     N9K-C9336C
Eth1/36

Total entries displayed: 2
```

4. Verify that all cluster ports are up:

   `network port show -ipspace Cluster`

   Each port should display up for `Link` and healthy for `Health Status`.

   Show example

```
cluster1::*> network port show -ipspace Cluster

Node: node1

                                                  Speed(Mbps) Health
Port      IPspace      Broadcast Domain Link MTU  Admin/Oper  Status
--------- ------------ ---------------- ---- ---- -----------
--------
e0a       Cluster      Cluster          up   9000  auto/10000
healthy
e0b       Cluster      Cluster          up   9000  auto/10000
healthy

Node: node2

                                                  Speed(Mbps) Health
Port      IPspace      Broadcast Domain Link MTU  Admin/Oper  Status
--------- ------------ ---------------- ---- ---- -----------
--------
e0a       Cluster      Cluster          up   9000  auto/10000
healthy
e0b       Cluster      Cluster          up   9000  auto/10000
healthy

4 entries were displayed.
```

5. Verify that all cluster LIFs are up and operational:

   `network interface show -vserver Cluster`

   Each cluster LIF should display `true` for `Is Home` and have a `Status Admin/Oper` of up/up.

Show example

```
cluster1::*> network interface show -vserver Cluster

            Logical    Status     Network            Current
Current Is
Vserver     Interface  Admin/Oper Address/Mask       Node
Port    Home
----------- ---------- ---------- ------------------ -------------
------- -----
Cluster
            node1_clus1  up/up    169.254.209.69/16  node1
e0a     true
            node1_clus2  up/up    169.254.49.125/16  node1
e0b     true
            node2_clus1  up/up    169.254.47.194/16  node2
e0a     true
            node2_clus2  up/up    169.254.19.183/16  node2
e0b     true
4 entries were displayed.
```

6. Disable auto-revert on all of the cluster LIFs:

   `network interface modify -vserver Cluster -lif * -auto-revert false`

Show example

```
cluster1::*> *network interface modify -vserver Cluster -lif * -auto
-revert false*

          Logical
Vserver   Interface     Auto-revert
--------- ------------- ------------
Cluster
          node1_clus1   false
          node1_clus2   false
          node2_clus1   false
          node2_clus2   false

4 entries were displayed.
```

7. Disconnect the cable from cluster port e0a on node1, and then connect e0a to port 1 on cluster switch cs1, using the appropriate cabling supported by the 9336C-FX2 switches.

The Hardware Universe - Switches contains more information about cabling.

Hardware Universe - Switches

8. Disconnect the cable from cluster port e0a on node2, and then connect e0a to port 2 on cluster switch cs1, using the appropriate cabling supported by the 9336C-FX2 switches.
9. Enable all node-facing ports on cluster switch cs1.

Show example

The following example shows that ports 1/1 through 1/34 are enabled on switch cs1:

```
cs1# config
Enter configuration commands, one per line. End with CNTL/Z.
cs1(config)# interface e1/1/1-4, e1/2/1-4, e1/3/1-4, e1/4/1-4,
e1/5/1-4, e1/6/1-4, e1/7-34
cs1(config-if-range)# no shutdown
```

10. Verify that all cluster LIFs are up and operational:

```
network interface show -vserver Cluster
```

Show example

The following example shows that all of the LIFs are up on node1 and node2:

```
cluster1::*> network interface show -vserver Cluster

         Logical      Status     Network            Current
Current Is
Vserver  Interface    Admin/Oper Address/Mask       Node         Port
Home
-------- ------------ ---------- ------------------ -----------
------- ----
Cluster
         node1_clus1  up/up      169.254.209.69/16  node1        e0b
false
         node1_clus2  up/up      169.254.49.125/16  node1        e0b
true
         node2_clus1  up/up      169.254.47.194/16  node2        e0b
false
         node2_clus2  up/up      169.254.19.183/16  node2        e0b
true

4 entries were displayed.
```

11. Display information about the status of the nodes in the cluster:

    `cluster show`

    Show example

    The following example displays information about the health and eligibility of the nodes in the cluster:

    ```
    cluster1::*> cluster show

    Node                 Health  Eligibility   Epsilon
    -------------------- ------- ------------  ------------
    node1                true    true          false
    node2                true    true          false

    2 entries were displayed.
    ```

12. Disconnect the cable from cluster port e0b on node1, and then connect e0b to port 1 on cluster switch cs2, using the appropriate cabling supported by the 9336C-FX2 switches.
13. Disconnect the cable from cluster port e0b on node2, and then connect e0b to port 2 on cluster switch cs2,

using the appropriate cabling supported by the 9336C-FX2 switches.

14. Enable all node-facing ports on cluster switch cs2.

Show example

The following example shows that ports 1/1 through 1/34 are enabled on switch cs2:

```
cs2# config
Enter configuration commands, one per line. End with CNTL/Z.
cs2(config)# interface e1/1/1-4, e1/2/1-4, e1/3/1-4, e1/4/1-4,
e1/5/1-4, e1/6/1-4, e1/7-34
cs2(config-if-range)# no shutdown
```

15. Verify that all cluster ports are up:

```
network port show -ipspace Cluster
```

Show example

The following example shows that all of the cluster ports are up on node1 and node2:

```
cluster1::*> network port show -ipspace Cluster

Node: node1

Ignore
                                                  Speed(Mbps) Health
Health
Port      IPspace      Broadcast Domain Link MTU  Admin/Oper  Status
Status
--------- ------------ ---------------- ---- ---- -----------
-------- ------
e0a       Cluster      Cluster          up   9000  auto/10000
healthy  false
e0b       Cluster      Cluster          up   9000  auto/10000
healthy  false

Node: node2

Ignore
                                                  Speed(Mbps) Health
Health
Port      IPspace      Broadcast Domain Link MTU  Admin/Oper  Status
Status
--------- ------------ ---------------- ---- ---- -----------
-------- ------
e0a       Cluster      Cluster          up   9000  auto/10000
healthy  false
e0b       Cluster      Cluster          up   9000  auto/10000
healthy  false

4 entries were displayed.
```

Step 3: Verify the configuration

1. Enable auto-revert on the cluster LIFs.

   ```
   network interface modify -vserver Cluster -lif * -auto-revert true
   ```

2. On switch cs2, shut down and restart all cluster ports to trigger an auto-revert of all cluster LIFs that are not on their home ports.

```
cs2> enable
cs2# configure
cs2(config)# interface eth1/1-1/2
cs2(config-if-range)# shutdown

(Wait for 5-10 seconds before re-enabling the ports)

cs2(config-if-range)# no shutdown

(After executing the no shutdown command, the nodes detect the change
and begin to auto-revert the cluster LIFs to their home ports)

cs2(config-if-range)# exit
cs2(config)# exit
cs2#
```

3. Verify that the cluster LIFs have reverted to their home ports (this might take a minute):

   `network interface show -vserver Cluster`

   If any of the cluster LIFs have not reverted to their home port, manually revert them. You must connect to each node-mgmt LIF or SP/BMC system console of the local node that owns the LIF:

   `network interface revert -vserver Cluster -lif *`

4. Verify that all interfaces display true for `Is Home`:

   `network interface show -vserver Cluster`

   This might take several minutes to complete.

Show example

The following example shows that all LIFs are up on node1 and node2 and that `Is Home` results are true:

```
cluster1::*> network interface show -vserver Cluster

          Logical      Status     Network            Current
Current Is
Vserver   Interface    Admin/Oper Address/Mask       Node       Port
Home
--------- ------------ ---------- ------------------ ----------
------- ----
Cluster
          node1_clus1  up/up      169.254.209.69/16  node1      e0a
true
          node1_clus2  up/up      169.254.49.125/16  node1      e0b
true
          node2_clus1  up/up      169.254.47.194/16  node2      e0a
true
          node2_clus2  up/up      169.254.19.183/16  node2      e0b
true

4 entries were displayed.
```

5. Verify that both nodes each have one connection to each switch:

   `show cdp neighbors`

Show example

The following example shows the appropriate results for both switches:

```
(cs1)# show cdp neighbors

Capability Codes: R - Router, T - Trans-Bridge, B - Source-Route-
Bridge
                  S - Switch, H - Host, I - IGMP, r - Repeater,
                  V - VoIP-Phone, D - Remotely-Managed-Device,
                  s - Supports-STP-Dispute

Device-ID          Local Intrfce  Hldtme Capability  Platform
Port ID
node1              Eth1/1         133    H           FAS2980
e0a
node2              Eth1/2         133    H           FAS2980
e0a
cs2                Eth1/35        175    R S I s     N9K-C9336C
Eth1/35
cs2                Eth1/36        175    R S I s     N9K-C9336C
Eth1/36

Total entries displayed: 4

(cs2)# show cdp neighbors

Capability Codes: R - Router, T - Trans-Bridge, B - Source-Route-
Bridge
                  S - Switch, H - Host, I - IGMP, r - Repeater,
                  V - VoIP-Phone, D - Remotely-Managed-Device,
                  s - Supports-STP-Dispute

Device-ID          Local Intrfce  Hldtme Capability  Platform
Port ID
node1              Eth1/1         133    H           FAS2980
e0b
node2              Eth1/2         133    H           FAS2980
e0b
cs1                Eth1/35        175    R S I s     N9K-C9336C
Eth1/35
cs1                Eth1/36        175    R S I s     N9K-C9336C
Eth1/36

Total entries displayed: 4
```

6. Display information about the discovered network devices in your cluster:

   `network device-discovery show -protocol cdp`

   Show example

```
cluster1::*> network device-discovery show -protocol cdp
Node/       Local  Discovered
Protocol    Port   Device (LLDP: ChassisID)  Interface
Platform
----------- ------ ------------------------- ----------------
----------------
node2      /cdp
            e0a    cs1                       0/2               N9K-
C9336C
            e0b    cs2                       0/2               N9K-
C9336C
node1      /cdp
            e0a    cs1                       0/1               N9K-
C9336C
            e0b    cs2                       0/1               N9K-
C9336C

4 entries were displayed.
```

7. Verify that the settings are disabled:

   `network options switchless-cluster show`

   > It might take several minutes for the command to complete. Wait for the '3 minute lifetime to expire' announcement.

   The false output in the following example shows that the configuration settings are disabled:

```
cluster1::*> network options switchless-cluster show
Enable Switchless Cluster: false
```

8. Verify the status of the node members in the cluster:

   `cluster show`

Show example

The following example shows information about the health and eligibility of the nodes in the cluster:

```
cluster1::*> cluster show

Node                 Health  Eligibility   Epsilon
-------------------- ------- ------------  --------
node1                true    true          false
node2                true    true          false
```

9. Verify the connectivity of the remote cluster interfaces:

ONTAP 9.9.1 and later

You can use the `network interface check cluster-connectivity` command to start an accessibility check for cluster connectivity and then display the details:

`network interface check cluster-connectivity start` and `network interface check cluster-connectivity show`

```
cluster1::*> network interface check cluster-connectivity start
```

NOTE: Wait for a number of seconds before running the `show` command to display the details.

```
cluster1::*> network interface check cluster-connectivity show
                                  Source           Destination
Packet
Node   Date                       LIF              LIF
Loss
------ -------------------------- ---------------- ----------------
-----------
node1
       3/5/2022 19:21:18 -06:00   node1_clus2      node2-clus1
none
       3/5/2022 19:21:20 -06:00   node1_clus2      node2_clus2
none
node2
       3/5/2022 19:21:18 -06:00   node2_clus2      node1_clus1
none
       3/5/2022 19:21:20 -06:00   node2_clus2      node1_clus2
none
```

All ONTAP releases

For all ONTAP releases, you can also use the `cluster ping-cluster -node <name>` command to check the connectivity:

```
cluster ping-cluster -node <name>
```

```
cluster1::*> cluster ping-cluster -node local
Host is node2
Getting addresses from network interface table...
Cluster node1_clus1 169.254.209.69 node1 e0a
Cluster node1_clus2 169.254.49.125 node1 e0b
Cluster node2_clus1 169.254.47.194 node2 e0a
Cluster node2_clus2 169.254.19.183 node2 e0b
Local = 169.254.47.194 169.254.19.183
Remote = 169.254.209.69 169.254.49.125
Cluster Vserver Id = 4294967293
Ping status:

Basic connectivity succeeds on 4 path(s)
Basic connectivity fails on 0 path(s)

Detected 9000 byte MTU on 4 path(s):
Local 169.254.47.194 to Remote 169.254.209.69
Local 169.254.47.194 to Remote 169.254.49.125
Local 169.254.19.183 to Remote 169.254.209.69
Local 169.254.19.183 to Remote 169.254.49.125
Larger than PMTU communication succeeds on 4 path(s)
RPC status:
2 paths up, 0 paths down (tcp check)
2 paths up, 0 paths down (udp check)
```

10. Change the privilege level back to admin:

```
set -privilege admin
```

11. If you suppressed automatic case creation, reenable it by invoking an AutoSupport message:

```
system node autosupport invoke -node * -type all -message MAINT=END
```

What's next?

After you've migrated your switches, you can configure switch health monitoring.

Replace the switches

Replace Cisco Nexus 9336C-FX2 and 9336C-FX2-T cluster switches

Follow these steps to replace defective Nexus 9336C-FX2 and 9336C-FX2-T switches in a cluster network. This is a nondisruptive procedure (NDU).

Review requirements

Before performing the switch replacement, make sure that:

- You have verified the switch serial number to ensure that the correct switch is replaced.
- On the existing cluster and network infrastructure:
  - The existing cluster is verified as completely functional, with at least one fully connected cluster switch.
  - All cluster ports are **up**.
  - All cluster logical interfaces (LIFs) are **up** and on their home ports.
  - The ONTAP `cluster ping-cluster -node node1` command must indicate that basic connectivity and larger than PMTU communication are successful on all paths.
- On the Nexus 9336C-FX2 replacement switch:
  - Management network connectivity on the replacement switch is functional.
  - Console access to the replacement switch is in place.
  - The node connections are ports 1/1 through 1/34.
  - All Inter-Switch Link (ISL) ports is disabled on ports 1/35 and 1/36.
  - The desired reference configuration file (RCF) and NX-OS operating system image switch is loaded onto the switch.
  - Initial customization of the switch is complete, as detailed in Configure the 9336C-FX2 cluster switch.

    Any previous site customizations, such as STP, SNMP, and SSH, are copied to the new switch.
- You have executed the command for migrating a cluster LIF from the node where the cluster LIF is hosted.

Enable console logging

NetApp strongly recommends that you enable console logging on the devices that you are using and take the following actions when replacing your switch:

- Leave AutoSupport enabled during maintenance.
- Trigger a maintenance AutoSupport before and after maintenance to disable case creation for the duration of the maintenance. See this Knowledge Base article SU92: How to suppress automatic case creation during scheduled maintenance windows for further details.
- Enable session logging for any CLI sessions. For instructions on how to enable session logging, review the "Logging Session Output" section in this Knowledge Base article How to configure PuTTY for optimal connectivity to ONTAP systems.

Replace the switch

About the examples

The examples in this procedure use the following switch and node nomenclature:

- The names of the existing Nexus 9336C-FX2 switches are cs1 and cs2.
- The name of the new Nexus 9336C-FX2 switch is newcs2.
- The node names are node1 and node2.
- The cluster ports on each node are named e0a and e0b.
- The cluster LIF names are node1_clus1 and node1_clus2 for node1, and node2_clus1 and node2_clus2 for node2.
- The prompt for changes to all cluster nodes is cluster1::*>

About this task

The following procedure is based on the following cluster network topology:

Show example

```
cluster1::*> network port show -ipspace Cluster

Node: node1

Ignore
                                                  Speed(Mbps) Health
Health
Port      IPspace      Broadcast Domain Link MTU  Admin/Oper  Status
Status
--------- ------------ ---------------- ---- ---- ----------- --------
------
e0a       Cluster      Cluster          up   9000  auto/10000 healthy
false
e0b       Cluster      Cluster          up   9000  auto/10000 healthy
false

Node: node2

Ignore
                                                  Speed(Mbps) Health
Health
Port      IPspace      Broadcast Domain Link MTU  Admin/Oper  Status
Status
--------- ------------ ---------------- ---- ---- ----------- --------
------
e0a       Cluster      Cluster          up   9000  auto/10000 healthy
false
e0b       Cluster      Cluster          up   9000  auto/10000 healthy
false
4 entries were displayed.



cluster1::*> network interface show -vserver Cluster
            Logical    Status     Network            Current
Current Is
Vserver     Interface  Admin/Oper Address/Mask       Node          Port
Home
----------- ---------- ---------- ------------------ -------------
------- ----
Cluster
            node1_clus1  up/up    169.254.209.69/16  node1         e0a
true
            node1_clus2  up/up    169.254.49.125/16  node1         e0b
```

```
true
            node2_clus1  up/up    169.254.47.194/16  node2         e0a
true
            node2_clus2  up/up    169.254.19.183/16  node2         e0b
true
4 entries were displayed.



cluster1::*> network device-discovery show -protocol cdp
Node/       Local  Discovered
Protocol    Port   Device (LLDP: ChassisID)  Interface         Platform
----------- ------ ------------------------- ----------------
----------------
node2      /cdp
            e0a    cs1                       Eth1/2            N9K-
C9336C
            e0b    cs2                       Eth1/2            N9K-
C9336C
node1      /cdp
            e0a    cs1                       Eth1/1            N9K-
C9336C
            e0b    cs2                       Eth1/1            N9K-
C9336C
4 entries were displayed.



cs1# show cdp neighbors

Capability Codes: R - Router, T - Trans-Bridge, B - Source-Route-Bridge
                  S - Switch, H - Host, I - IGMP, r - Repeater,
                  V - VoIP-Phone, D - Remotely-Managed-Device,
                  s - Supports-STP-Dispute

Device-ID          Local Intrfce  Hldtme Capability  Platform      Port
ID
node1              Eth1/1         144    H           FAS2980       e0a
node2              Eth1/2         145    H           FAS2980       e0a
cs2                Eth1/35        176    R S I s     N9K-C9336C
Eth1/35
cs2(FDO220329V5)   Eth1/36        176    R S I s     N9K-C9336C
Eth1/36

Total entries displayed: 4
```

```
cs2# show cdp neighbors

Capability Codes: R - Router, T - Trans-Bridge, B - Source-Route-Bridge
                  S - Switch, H - Host, I - IGMP, r - Repeater,
                  V - VoIP-Phone, D - Remotely-Managed-Device,
                  s - Supports-STP-Dispute

Device-ID          Local Intrfce  Hldtme Capability  Platform      Port
ID
node1              Eth1/1         139    H           FAS2980       e0b
node2              Eth1/2         124    H           FAS2980       e0b
cs1                Eth1/35        178    R S I s     N9K-C9336C
Eth1/35
cs1                Eth1/36        178    R S I s     N9K-C9336C
Eth1/36

Total entries displayed: 4
```

Step 1: Prepare for replacement

1. If AutoSupport is enabled on this cluster, suppress automatic case creation by invoking an AutoSupport message:

   ```
   system node autosupport invoke -node * -type all -message MAINT=xh
   ```

   where x is the duration of the maintenance window in hours.

   > The AutoSupport message notifies technical support of this maintenance task so that automatic case creation is suppressed during the maintenance window.

2. Install the appropriate RCF and image on the switch, newcs2, and make any necessary site preparations.

   If necessary, verify, download, and install the appropriate versions of the RCF and NX-OS software for the new switch. If you have verified that the new switch is correctly set up and does not need updates to the RCF and NX-OS software, continue to step 2.

   a. Go to the *NetApp Cluster and Management Network Switches Reference Configuration File Description Page* on the NetApp Support Site.
   b. Click the link for the *Cluster Network and Management Network Compatibility Matrix*, and then note the required switch software version.
   c. Click your browser's back arrow to return to the Description page, click **CONTINUE**, accept the license agreement, and then go to the Download page.
   d. Follow the steps on the Download page to download the correct RCF and NX-OS files for the version of ONTAP software you are installing.

3. On the new switch, log in as admin and shut down all of the ports that will be connected to the node cluster interfaces (ports 1/1 to 1/34).

   If the switch that you are replacing is not functional and is powered down, go to Step 4. The LIFs on the

cluster nodes should have already failed over to the other cluster port for each node.

Show example

```
newcs2# config
Enter configuration commands, one per line. End with CNTL/Z.
newcs2(config)# interface e1/1-34
newcs2(config-if-range)# shutdown
```

4. Verify that all cluster LIFs have auto-revert enabled:

   `network interface show -vserver Cluster -fields auto-revert`

   Show example

```
cluster1::> network interface show -vserver Cluster -fields auto-
revert

             Logical
Vserver      Interface     Auto-revert
------------ ------------- -------------
Cluster      node1_clus1   true
Cluster      node1_clus2   true
Cluster      node2_clus1   true
Cluster      node2_clus2   true

4 entries were displayed.
```

5. Verify the connectivity of the remote cluster interfaces:

ONTAP 9.9.1 and later

You can use the `network interface check cluster-connectivity` command to start an accessibility check for cluster connectivity and then display the details:

`network interface check cluster-connectivity start` and `network interface check cluster-connectivity show`

```
cluster1::*> network interface check cluster-connectivity start
```

NOTE: Wait for a number of seconds before running the `show` command to display the details.

```
cluster1::*> network interface check cluster-connectivity show
                                  Source           Destination
Packet
Node   Date                       LIF              LIF
Loss
------ ------------------------- ---------------- ----------------
-----------
node1
       3/5/2022 19:21:18 -06:00   node1_clus2      node2-clus1
none
       3/5/2022 19:21:20 -06:00   node1_clus2      node2_clus2
none
node2
       3/5/2022 19:21:18 -06:00   node2_clus2      node1_clus1
none
       3/5/2022 19:21:20 -06:00   node2_clus2      node1_clus2
none
```

All ONTAP releases

For all ONTAP releases, you can also use the `cluster ping-cluster -node <name>` command to check the connectivity:

```
cluster ping-cluster -node <name>
```

```
cluster1::*> cluster ping-cluster -node local
Host is node2
Getting addresses from network interface table...
Cluster node1_clus1 169.254.209.69 node1 e0a
Cluster node1_clus2 169.254.49.125 node1 e0b
Cluster node2_clus1 169.254.47.194 node2 e0a
Cluster node2_clus2 169.254.19.183 node2 e0b
Local = 169.254.47.194 169.254.19.183
Remote = 169.254.209.69 169.254.49.125
Cluster Vserver Id = 4294967293
Ping status:
....
Basic connectivity succeeds on 4 path(s)
Basic connectivity fails on 0 path(s)
................
Detected 9000 byte MTU on 4 path(s):
Local 169.254.47.194 to Remote 169.254.209.69
Local 169.254.47.194 to Remote 169.254.49.125
Local 169.254.19.183 to Remote 169.254.209.69
Local 169.254.19.183 to Remote 169.254.49.125
Larger than PMTU communication succeeds on 4 path(s)
RPC status:
2 paths up, 0 paths down (tcp check)
2 paths up, 0 paths down (udp check)
```

Step 2: Configure cables and ports

1. Shut down the ISL ports 1/35 and 1/36 on the Nexus 9336C-FX2 switch cs1.

   Show example

   ```
   cs1# configure
   Enter configuration commands, one per line. End with CNTL/Z.
   cs1(config)# interface e1/35-36
   cs1(config-if-range)# shutdown
   cs1(config-if-range)#
   ```

2. Remove all of the cables from the Nexus 9336C-FX2 cs2 switch, and then connect them to the same ports on the Nexus C9336C-FX2 newcs2 switch.
3. Bring up the ISLs ports 1/35 and 1/36 between the cs1 and newcs2 switches, and then verify the port channel operation status.

   Port-Channel should indicate Po1(SU) and Member Ports should indicate Eth1/35(P) and Eth1/36(P).

Show example

This example enables ISL ports 1/35 and 1/36 and displays the port channel summary on switch cs1:

```
cs1# configure
Enter configuration commands, one per line. End with CNTL/Z.
cs1(config)# int e1/35-36
cs1(config-if-range)# no shutdown

cs1(config-if-range)# show port-channel summary
Flags:  D - Down        P - Up in port-channel (members)
        I - Individual  H - Hot-standby (LACP only)
        s - Suspended   r - Module-removed
        b - BFD Session Wait
        S - Switched    R - Routed
        U - Up (port-channel)
        p - Up in delay-lacp mode (member)
        M - Not in use. Min-links not met
--------------------------------------------------------------------------
------------
Group Port-       Type     Protocol  Member       Ports
      Channel
--------------------------------------------------------------------------
------------
1     Po1(SU)     Eth      LACP      Eth1/35(P)   Eth1/36(P)

cs1(config-if-range)#
```

4. Verify that port e0b is up on all nodes:

   ```
   network port show ipspace Cluster
   ```

Show example

The output should be similar to the following:

```
cluster1::*> network port show -ipspace Cluster

Node: node1

Ignore
                                                  Speed(Mbps)
Health   Health
Port      IPspace      Broadcast Domain Link MTU   Admin/Oper
Status   Status
--------- ------------ ---------------- ---- ----- -----------
-------- -------
e0a       Cluster      Cluster          up   9000  auto/10000
healthy  false
e0b       Cluster      Cluster          up   9000  auto/10000
healthy  false

Node: node2

Ignore
                                                  Speed(Mbps)
Health   Health
Port      IPspace      Broadcast Domain Link MTU   Admin/Oper
Status   Status
--------- ------------ ---------------- ---- ----- -----------
-------- -------
e0a       Cluster      Cluster          up   9000  auto/10000
healthy  false
e0b       Cluster      Cluster          up   9000  auto/auto   -
false

4 entries were displayed.
```

5. On the same node you used in the previous step, revert the cluster LIF associated with the port in the previous step by using the network interface revert command.

Show example

In this example, LIF node1_clus2 on node1 is successfully reverted if the Home value is true and the port is e0b.

The following commands return LIF `node1_clus2` on `node1` to home port `e0a` and displays information about the LIFs on both nodes. Bringing up the first node is successful if the Is Home column is true for both cluster interfaces and they show the correct port assignments, in this example `e0a` and `e0b` on node1.

```
cluster1::*> network interface show -vserver Cluster

            Logical      Status     Network            Current
Current Is
Vserver     Interface    Admin/Oper Address/Mask       Node
Port    Home
----------- ------------ ---------- ------------------ ----------
------- -----
Cluster
            node1_clus1  up/up      169.254.209.69/16  node1
e0a     true
            node1_clus2  up/up      169.254.49.125/16  node1
e0b     true
            node2_clus1  up/up      169.254.47.194/16  node2
e0a     true
            node2_clus2  up/up      169.254.19.183/16  node2
e0a     false

4 entries were displayed.
```

6. Display information about the nodes in a cluster:

   `cluster show`

Show example

This example shows that the node health for node1 and node2 in this cluster is true:

```
cluster1::*> cluster show

Node          Health  Eligibility
------------- ------- ------------
node1         false   true
node2         true    true
```

7. Verify that all physical cluster ports are up:

   `network port show ipspace Cluster`

   Show example

```
cluster1::*> network port show -ipspace Cluster

Node node1
Ignore
                                                        Speed(Mbps)
Health   Health
Port      IPspace     Broadcast Domain  Link  MTU   Admin/Oper
Status   Status
--------- ----------- ----------------- ----- ----- -----------
-------- ------
e0a       Cluster     Cluster           up    9000  auto/10000
healthy  false
e0b       Cluster     Cluster           up    9000  auto/10000
healthy  false

Node: node2

Ignore
                                                        Speed(Mbps)
Health   Health
Port      IPspace      Broadcast Domain Link  MTU   Admin/Oper
Status   Status
--------- ------------ ---------------- ----- ----- -----------
-------- ------
e0a       Cluster      Cluster          up    9000  auto/10000
healthy  false
e0b       Cluster      Cluster          up    9000  auto/10000
healthy  false

4 entries were displayed.
```

8. Verify the connectivity of the remote cluster interfaces:

ONTAP 9.9.1 and later

You can use the `network interface check cluster-connectivity` command to start an accessibility check for cluster connectivity and then display the details:

`network interface check cluster-connectivity start` and `network interface check cluster-connectivity show`

```
cluster1::*> network interface check cluster-connectivity start
```

NOTE: Wait for a number of seconds before running the `show` command to display the details.

```
cluster1::*> network interface check cluster-connectivity show
                                  Source           Destination
Packet
Node   Date                       LIF              LIF
Loss
------ -------------------------- ---------------- ----------------
-----------
node1
       3/5/2022 19:21:18 -06:00   node1_clus2      node2-clus1
none
       3/5/2022 19:21:20 -06:00   node1_clus2      node2_clus2
none
node2
       3/5/2022 19:21:18 -06:00   node2_clus2      node1_clus1
none
       3/5/2022 19:21:20 -06:00   node2_clus2      node1_clus2
none
```

All ONTAP releases

For all ONTAP releases, you can also use the `cluster ping-cluster -node <name>` command to check the connectivity:

```
cluster ping-cluster -node <name>
```

```
cluster1::*> cluster ping-cluster -node local
Host is node2
Getting addresses from network interface table...
Cluster node1_clus1 169.254.209.69 node1 e0a
Cluster node1_clus2 169.254.49.125 node1 e0b
Cluster node2_clus1 169.254.47.194 node2 e0a
Cluster node2_clus2 169.254.19.183 node2 e0b
Local = 169.254.47.194 169.254.19.183
Remote = 169.254.209.69 169.254.49.125
Cluster Vserver Id = 4294967293
Ping status:
....
Basic connectivity succeeds on 4 path(s)
Basic connectivity fails on 0 path(s)
................
Detected 9000 byte MTU on 4 path(s):
Local 169.254.47.194 to Remote 169.254.209.69
Local 169.254.47.194 to Remote 169.254.49.125
Local 169.254.19.183 to Remote 169.254.209.69
Local 169.254.19.183 to Remote 169.254.49.125
Larger than PMTU communication succeeds on 4 path(s)
RPC status:
2 paths up, 0 paths down (tcp check)
2 paths up, 0 paths down (udp check)
```

Step 3: Verify the configuration

1. Confirm the following cluster network configuration:

   ```
   network port show
   ```

Show example

```
cluster1::*> network port show -ipspace Cluster
Node: node1

Ignore
                                        Speed(Mbps)            Health
Health
Port      IPspace     Broadcast Domain Link MTU   Admin/Oper  Status
Status
--------- ----------- ---------------- ---- ----- -----------
-------- ------
e0a       Cluster     Cluster          up   9000  auto/10000
healthy  false
e0b       Cluster     Cluster          up   9000  auto/10000
healthy  false

Node: node2

Ignore
                                         Speed(Mbps)           Health
Health
Port      IPspace      Broadcast Domain Link MTU  Admin/Oper  Status
Status
--------- ------------ ---------------- ---- ---- -----------
-------- ------
e0a       Cluster      Cluster          up   9000 auto/10000
healthy  false
e0b       Cluster      Cluster          up   9000 auto/10000
healthy  false

4 entries were displayed.


cluster1::*> network interface show -vserver Cluster

            Logical    Status     Network            Current
Current Is
Vserver     Interface  Admin/Oper Address/Mask       Node
Port    Home
----------- ---------- ---------- ------------------ -------------
------- ----
Cluster
            node1_clus1  up/up    169.254.209.69/16  node1
e0a     true
            node1_clus2  up/up    169.254.49.125/16  node1
```

```
e0b     true
            node2_clus1  up/up    169.254.47.194/16  node2
e0a     true
            node2_clus2  up/up    169.254.19.183/16  node2
e0b     true

4 entries were displayed.

cluster1::> network device-discovery show -protocol cdp

Node/       Local  Discovered
Protocol    Port   Device (LLDP: ChassisID)  Interface
Platform
----------- ------ ------------------------- ----------------
----------------
node2      /cdp
            e0a    cs1                       0/2               N9K-
C9336C
            e0b    newcs2                    0/2               N9K-
C9336C
node1      /cdp
            e0a    cs1                       0/1               N9K-
C9336C
            e0b    newcs2                    0/1               N9K-
C9336C

4 entries were displayed.


cs1# show cdp neighbors

Capability Codes: R - Router, T - Trans-Bridge, B - Source-Route-
Bridge
                  S - Switch, H - Host, I - IGMP, r - Repeater,
                  V - VoIP-Phone, D - Remotely-Managed-Device,
                  s - Supports-STP-Dispute

Device-ID            Local Intrfce  Hldtme Capability  Platform
Port ID
node1                Eth1/1         144    H           FAS2980
e0a
node2                Eth1/2         145    H           FAS2980
e0a
newcs2               Eth1/35        176    R S I s     N9K-C9336C
Eth1/35
newcs2               Eth1/36        176    R S I s     N9K-C9336C
```

```
Eth1/36

Total entries displayed: 4


cs2# show cdp neighbors

Capability Codes: R - Router, T - Trans-Bridge, B - Source-Route-
Bridge
                  S - Switch, H - Host, I - IGMP, r - Repeater,
                  V - VoIP-Phone, D - Remotely-Managed-Device,
                  s - Supports-STP-Dispute

Device-ID          Local Intrfce  Hldtme Capability  Platform
Port ID
node1              Eth1/1         139    H           FAS2980
e0b
node2              Eth1/2         124    H           FAS2980
e0b
cs1                Eth1/35        178    R S I s     N9K-C9336C
Eth1/35
cs1                Eth1/36        178    R S I s     N9K-C9336C
Eth1/36

Total entries displayed: 4
```

2. If you suppressed automatic case creation, re-enable it by invoking an AutoSupport message:

```
system node autosupport invoke -node * -type all -message MAINT=END
```

What's next?

After you've replaced your switches, you can configure switch health monitoring.

Replace Cisco Nexus 9336C-FX2 and 9336C-FX2-T cluster switches with switchless connections

You can migrate from a cluster with a switched cluster network to one where two nodes are directly connected for ONTAP 9.3 and later.

Review requirements

Guidelines

Review the following guidelines:

- Migrating to a two-node switchless cluster configuration is a nondisruptive operation. Most systems have two dedicated cluster interconnect ports on each node, but you can also use this procedure for systems with a larger number of dedicated cluster interconnect ports on each node, such as four, six or eight.

- You cannot use the switchless cluster interconnect feature with more than two nodes.
- If you have an existing two-node cluster that uses cluster interconnect switches and is running ONTAP 9.3 or later, you can replace the switches with direct, back-to-back connections between the nodes.

Before you begin

Make sure you have the following:

- A healthy cluster that consists of two nodes connected by cluster switches. The nodes must be running the same ONTAP release.
- Each node with the required number of dedicated cluster ports, which provide redundant cluster interconnect connections to support your system configuration. For example, there are two redundant ports for a system with two dedicated cluster interconnect ports on each node.

Migrate the switches

About this task

The following procedure removes the cluster switches in a two-node cluster and replaces each connection to the switch with a direct connection to the partner node.

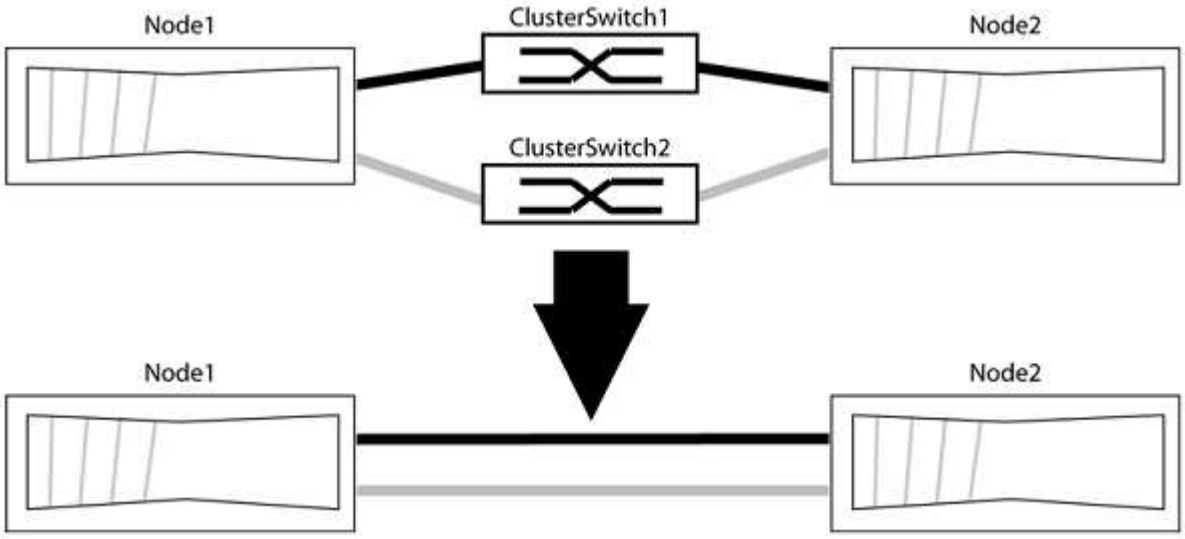

About the examples

The examples in the following procedure show nodes that are using "e0a" and "e0b" as cluster ports. Your nodes might be using different cluster ports as they vary by system.

Step 1: Prepare for migration

1. Change the privilege level to advanced, entering `y` when prompted to continue:

   ```
   set -privilege advanced
   ```

   The advanced prompt `*>` appears.

2. ONTAP 9.3 and later supports automatic detection of switchless clusters, which is enabled by default.

   You can verify that detection of switchless clusters is enabled by running the advanced privilege command:

```
network options detect-switchless-cluster show
```

Show example

The following example output shows if the option is enabled.

```
cluster::*> network options detect-switchless-cluster show
   (network options detect-switchless-cluster show)
Enable Switchless Cluster Detection: true
```

If "Enable Switchless Cluster Detection" is `false`, contact NetApp support.

3. If AutoSupport is enabled on this cluster, suppress automatic case creation by invoking an AutoSupport message:

   ```
   system node autosupport invoke -node * -type all -message
   MAINT=<number_of_hours>h
   ```

   where `h` is the duration of the maintenance window in hours. The message notifies technical support of this maintenance task so that they can suppress automatic case creation during the maintenance window.

   In the following example, the command suppresses automatic case creation for two hours:

   Show example

   ```
   cluster::*> system node autosupport invoke -node * -type all
   -message MAINT=2h
   ```

Step 2: Configure ports and cabling

1. Organize the cluster ports on each switch into groups so that the cluster ports in group1 go to cluster switch1 and the cluster ports in group2 go to cluster switch2. These groups are required later in the procedure.
2. Identify the cluster ports and verify link status and health:

   ```
   network port show -ipspace Cluster
   ```

   In the following example for nodes with cluster ports "e0a" and "e0b", one group is identified as “node1:e0a” and “node2:e0a” and the other group as “node1:e0b” and “node2:e0b”. Your nodes might be using different cluster ports because they vary by system.

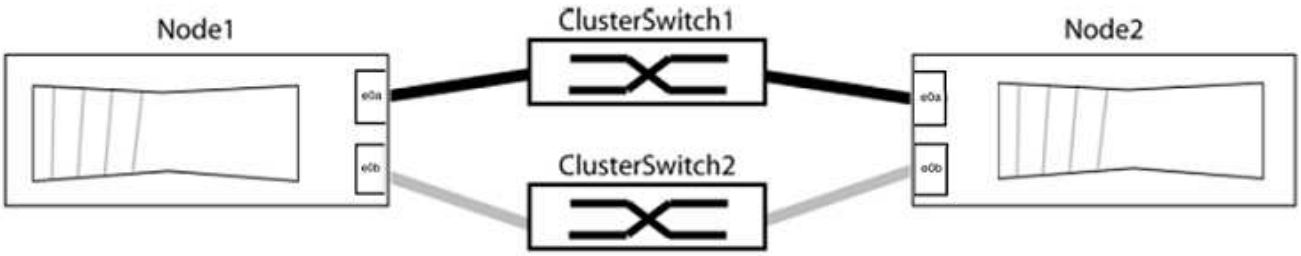

Verify that the ports have a value of `up` for the “Link” column and a value of `healthy` for the “Health Status” column.

Show example

```
cluster::> network port show -ipspace Cluster
Node: node1

Ignore
                                                  Speed(Mbps) Health
Health
Port  IPspace   Broadcast Domain Link  MTU   Admin/Oper  Status
Status
----- --------- ---------------- ----- ----- ----------- -------
-------
e0a   Cluster   Cluster          up    9000  auto/10000  healthy
false
e0b   Cluster   Cluster          up    9000  auto/10000  healthy
false

Node: node2

Ignore
                                                  Speed(Mbps) Health
Health
Port  IPspace   Broadcast Domain Link  MTU   Admin/Oper  Status
Status
----- --------- ---------------- ----- ----- ----------- -------
-------
e0a   Cluster   Cluster          up    9000  auto/10000  healthy
false
e0b   Cluster   Cluster          up    9000  auto/10000  healthy
false
4 entries were displayed.
```

3. Confirm that all the cluster LIFs are on their home ports.

Verify that the “is-home” column is `true` for each of the cluster LIFs:

```
network interface show -vserver Cluster -fields is-home
```

Show example

```
cluster::*> net int show -vserver Cluster -fields is-home
(network interface show)
vserver  lif          is-home
-------- ------------ --------
Cluster  node1_clus1  true
Cluster  node1_clus2  true
Cluster  node2_clus1  true
Cluster  node2_clus2  true
4 entries were displayed.
```

If there are cluster LIFs that are not on their home ports, revert those LIFs to their home ports:

```
network interface revert -vserver Cluster -lif *
```

4. Disable auto-revert for the cluster LIFs:

   ```
   network interface modify -vserver Cluster -lif * -auto-revert false
   ```

5. Verify that all ports listed in the previous step are connected to a network switch:

   ```
   network device-discovery show -port cluster_port
   ```

   The “Discovered Device” column should be the name of the cluster switch that the port is connected to.

Show example

The following example shows that cluster ports "e0a" and "e0b" are correctly connected to cluster switches "cs1" and "cs2".

```
cluster::> network device-discovery show -port e0a|e0b
  (network device-discovery show)
Node/     Local  Discovered
Protocol  Port   Device (LLDP: ChassisID)  Interface  Platform
--------- ------ ------------------------- ---------- ----------
node1/cdp
          e0a    cs1                       0/11       BES-53248
          e0b    cs2                       0/12       BES-53248
node2/cdp
          e0a    cs1                       0/9        BES-53248
          e0b    cs2                       0/9        BES-53248
4 entries were displayed.
```

6. Verify the connectivity of the remote cluster interfaces:

ONTAP 9.9.1 and later

You can use the `network interface check cluster-connectivity` command to start an accessibility check for cluster connectivity and then display the details:

`network interface check cluster-connectivity start` and `network interface check cluster-connectivity show`

```
cluster1::*> network interface check cluster-connectivity start
```

NOTE: Wait for a number of seconds before running the `show` command to display the details.

```
cluster1::*> network interface check cluster-connectivity show
                                  Source           Destination
Packet
Node   Date                       LIF              LIF
Loss
------ -------------------------- ---------------- ----------------
-----------
node1
       3/5/2022 19:21:18 -06:00   node1_clus2      node2-clus1
none
       3/5/2022 19:21:20 -06:00   node1_clus2      node2_clus2
none
node2
       3/5/2022 19:21:18 -06:00   node2_clus2      node1_clus1
none
       3/5/2022 19:21:20 -06:00   node2_clus2      node1_clus2
none
```

All ONTAP releases

For all ONTAP releases, you can also use the `cluster ping-cluster -node <name>` command to check the connectivity:

```
cluster ping-cluster -node <name>
```

```
cluster1::*> cluster ping-cluster -node local
Host is node2
Getting addresses from network interface table...
Cluster node1_clus1 169.254.209.69 node1 e0a
Cluster node1_clus2 169.254.49.125 node1 e0b
Cluster node2_clus1 169.254.47.194 node2 e0a
Cluster node2_clus2 169.254.19.183 node2 e0b
Local = 169.254.47.194 169.254.19.183
Remote = 169.254.209.69 169.254.49.125
Cluster Vserver Id = 4294967293
Ping status:

Basic connectivity succeeds on 4 path(s)
Basic connectivity fails on 0 path(s)

Detected 9000 byte MTU on 4 path(s):
Local 169.254.47.194 to Remote 169.254.209.69
Local 169.254.47.194 to Remote 169.254.49.125
Local 169.254.19.183 to Remote 169.254.209.69
Local 169.254.19.183 to Remote 169.254.49.125
Larger than PMTU communication succeeds on 4 path(s)
RPC status:
2 paths up, 0 paths down (tcp check)
2 paths up, 0 paths down (udp check)
```

7. Verify that the cluster is healthy:

   ```
   cluster ring show
   ```

   All units must be either master or secondary.

8. Set up the switchless configuration for the ports in group 1.

   To avoid potential networking issues, you must disconnect the ports from group1 and reconnect them back-to-back as quickly as possible, for example, **in less than 20 seconds**.

   a. Disconnect all the cables from the ports in group1 at the same time.

      In the following example, the cables are disconnected from port "e0a" on each node, and cluster traffic continues through the switch and port "e0b" on each node:

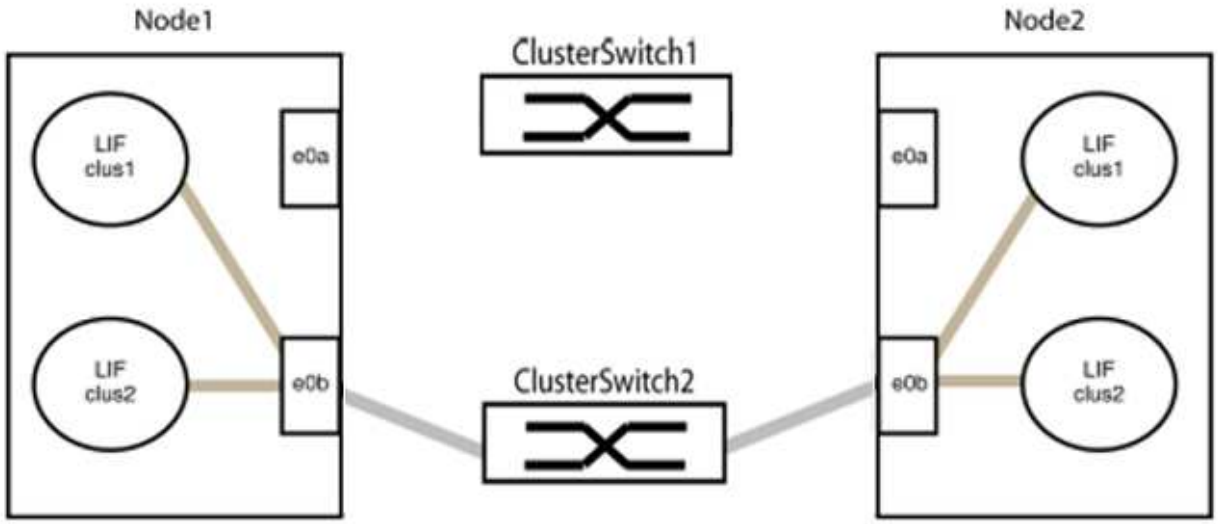

b. Cable the ports in group1 back-to-back.

In the following example, "e0a" on node1 is connected to "e0a" on node2:

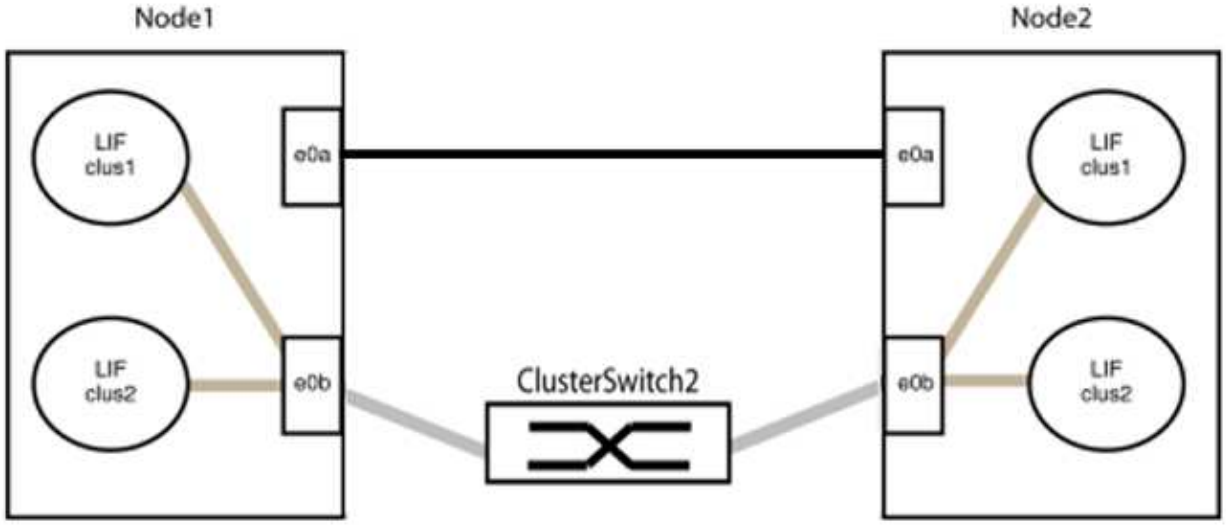

9. The switchless cluster network option transitions from `false` to `true`. This might take up to 45 seconds. Confirm that the switchless option is set to `true`:

```
network options switchless-cluster show
```

The following example shows that the switchless cluster is enabled:

```
cluster::*> network options switchless-cluster show
Enable Switchless Cluster: true
```

10. Verify the connectivity of the remote cluster interfaces:

ONTAP 9.9.1 and later

You can use the `network interface check cluster-connectivity` command to start an accessibility check for cluster connectivity and then display the details:

`network interface check cluster-connectivity start` and `network interface check cluster-connectivity show`

```
cluster1::*> network interface check cluster-connectivity start
```

NOTE: Wait for a number of seconds before running the `show` command to display the details.

```
cluster1::*> network interface check cluster-connectivity show
                                  Source           Destination
Packet
Node   Date                       LIF              LIF
Loss
------ -------------------------- ---------------- ----------------
-----------
node1
       3/5/2022 19:21:18 -06:00   node1_clus2      node2-clus1
none
       3/5/2022 19:21:20 -06:00   node1_clus2      node2_clus2
none
node2
       3/5/2022 19:21:18 -06:00   node2_clus2      node1_clus1
none
       3/5/2022 19:21:20 -06:00   node2_clus2      node1_clus2
none
```

All ONTAP releases

For all ONTAP releases, you can also use the `cluster ping-cluster -node <name>` command to check the connectivity:

```
cluster ping-cluster -node <name>
```

```
cluster1::*> cluster ping-cluster -node local
Host is node2
Getting addresses from network interface table...
Cluster node1_clus1 169.254.209.69 node1 e0a
Cluster node1_clus2 169.254.49.125 node1 e0b
Cluster node2_clus1 169.254.47.194 node2 e0a
Cluster node2_clus2 169.254.19.183 node2 e0b
Local = 169.254.47.194 169.254.19.183
Remote = 169.254.209.69 169.254.49.125
Cluster Vserver Id = 4294967293
Ping status:

Basic connectivity succeeds on 4 path(s)
Basic connectivity fails on 0 path(s)

Detected 9000 byte MTU on 4 path(s):
Local 169.254.47.194 to Remote 169.254.209.69
Local 169.254.47.194 to Remote 169.254.49.125
Local 169.254.19.183 to Remote 169.254.209.69
Local 169.254.19.183 to Remote 169.254.49.125
Larger than PMTU communication succeeds on 4 path(s)
RPC status:
2 paths up, 0 paths down (tcp check)
2 paths up, 0 paths down (udp check)
```

Before proceeding to the next step, you must wait at least two minutes to confirm a working back-to-back connection on group 1.

11. Set up the switchless configuration for the ports in group 2.

To avoid potential networking issues, you must disconnect the ports from group2 and reconnect them back-to-back as quickly as possible, for example, **in less than 20 seconds**.

a. Disconnect all the cables from the ports in group2 at the same time.

In the following example, the cables are disconnected from port "e0b" on each node, and cluster traffic continues through the direct connection between the "e0a" ports:

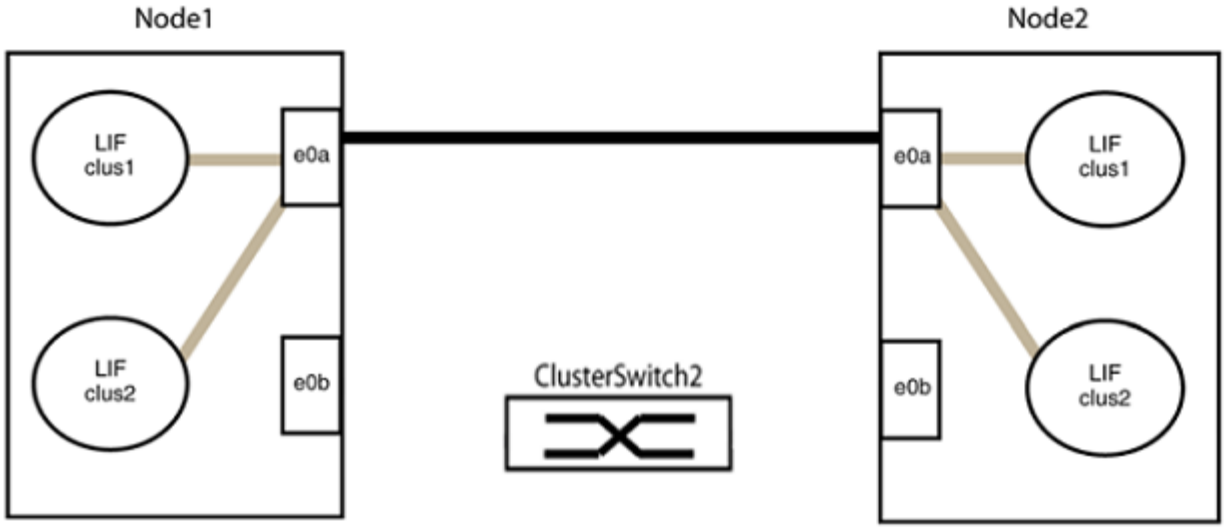

b. Cable the ports in group2 back-to-back.

   In the following example, "e0a" on node1 is connected to "e0a" on node2 and "e0b" on node1 is connected to "e0b" on node2:

Step 3: Verify the configuration

1. Verify that the ports on both nodes are correctly connected:

   `network device-discovery show -port` *`cluster_port`*

Show example

The following example shows that cluster ports "e0a" and "e0b" are correctly connected to the corresponding port on the cluster partner:

```
cluster::> net device-discovery show -port e0a|e0b
  (network device-discovery show)
Node/      Local  Discovered
Protocol   Port   Device (LLDP: ChassisID)  Interface  Platform
---------- ------ ------------------------- ---------- ----------
node1/cdp
           e0a    node2                     e0a        AFF-A300
           e0b    node2                     e0b        AFF-A300
node1/lldp
           e0a    node2 (00:a0:98:da:16:44) e0a        -
           e0b    node2 (00:a0:98:da:16:44) e0b        -
node2/cdp
           e0a    node1                     e0a        AFF-A300
           e0b    node1                     e0b        AFF-A300
node2/lldp
           e0a    node1 (00:a0:98:da:87:49) e0a        -
           e0b    node1 (00:a0:98:da:87:49) e0b        -
8 entries were displayed.
```

2. Re-enable auto-revert for the cluster LIFs:

   `network interface modify -vserver Cluster -lif * -auto-revert true`

3. Verify that all LIFs are home. This might take a few seconds.

   `network interface show -vserver Cluster -lif` *`lif_name`*

Show example

The LIFs have been reverted if the “Is Home” column is `true`, as shown for `node1_clus2` and `node2_clus2` in the following example:

```
cluster::> network interface show -vserver Cluster -fields curr-
port,is-home
vserver  lif           curr-port is-home
-------- ------------- --------- -------
Cluster  node1_clus1   e0a       true
Cluster  node1_clus2   e0b       true
Cluster  node2_clus1   e0a       true
Cluster  node2_clus2   e0b       true
4 entries were displayed.
```

If any cluster LIFS have not returned to their home ports, revert them manually from the local node:

`network interface revert -vserver Cluster -lif` *`lif_name`*

4. Check the cluster status of the nodes from the system console of either node:

   `cluster show`

   Show example

   The following example shows epsilon on both nodes to be `false`:

   ```
   Node  Health  Eligibility Epsilon
   ----- ------- ----------- --------
   node1 true    true        false
   node2 true    true        false
   2 entries were displayed.
   ```

5. Verify the connectivity of the remote cluster interfaces:

ONTAP 9.9.1 and later

You can use the `network interface check cluster-connectivity` command to start an accessibility check for cluster connectivity and then display the details:

`network interface check cluster-connectivity start` and `network interface check cluster-connectivity show`

```
cluster1::*> network interface check cluster-connectivity start
```

NOTE: Wait for a number of seconds before running the `show` command to display the details.

```
cluster1::*> network interface check cluster-connectivity show
                                  Source           Destination
Packet
Node   Date                       LIF              LIF
Loss
------ -------------------------- ---------------- ----------------
-----------
node1
       3/5/2022 19:21:18 -06:00   node1_clus2      node2-clus1
none
       3/5/2022 19:21:20 -06:00   node1_clus2      node2_clus2
none
node2
       3/5/2022 19:21:18 -06:00   node2_clus2      node1_clus1
none
       3/5/2022 19:21:20 -06:00   node2_clus2      node1_clus2
none
```

All ONTAP releases

For all ONTAP releases, you can also use the `cluster ping-cluster -node <name>` command to check the connectivity:

```
cluster ping-cluster -node <name>
```

```
cluster1::*> cluster ping-cluster -node local
Host is node2
Getting addresses from network interface table...
Cluster node1_clus1 169.254.209.69 node1 e0a
Cluster node1_clus2 169.254.49.125 node1 e0b
Cluster node2_clus1 169.254.47.194 node2 e0a
Cluster node2_clus2 169.254.19.183 node2 e0b
Local = 169.254.47.194 169.254.19.183
Remote = 169.254.209.69 169.254.49.125
Cluster Vserver Id = 4294967293
Ping status:

Basic connectivity succeeds on 4 path(s)
Basic connectivity fails on 0 path(s)

Detected 9000 byte MTU on 4 path(s):
Local 169.254.47.194 to Remote 169.254.209.69
Local 169.254.47.194 to Remote 169.254.49.125
Local 169.254.19.183 to Remote 169.254.209.69
Local 169.254.19.183 to Remote 169.254.49.125
Larger than PMTU communication succeeds on 4 path(s)
RPC status:
2 paths up, 0 paths down (tcp check)
2 paths up, 0 paths down (udp check)
```

6. If you suppressed automatic case creation, reenable it by invoking an AutoSupport message:

   ```
   system node autosupport invoke -node * -type all -message MAINT=END
   ```

   For more information, see NetApp KB Article 1010449: How to suppress automatic case creation during scheduled maintenance windows.

7. Change the privilege level back to admin:

   ```
   set -privilege admin
   ```

NVIDIA SN2100

Get started

Installation and setup workflow for NVIDIA SN2100 switches

The NVIDIA SN2100 is a cluster switch that allows you to build ONTAP clusters with more than two nodes.

Follow these workflow steps to install and set up your to NVIDIA SN2100 switches.

1 Review the configuration requirements

Review the configuration requirements for the SN2100 cluster switch.

2 Review the components and part numbers

Review the components and part numbers for the SN2100 cluster switch.

3 Review the required documentation

Review specific switch and controller documentation to set up your SN2100 switches and the ONTAP cluster.

4 Install the hardware

Install the switch hardware.

5 Configure the software

Configure the switch software.

Configuration requirements for NVIDIA SN2100 switches

For NVIDIA SN2100 switch installation and maintenance, be sure to review all configuration requirements.

Installation requirements

If you want to build ONTAP clusters with more than two nodes, you need two supported cluster network switches. You can use additional management switches, which are optional.

You install the NVIDIA SN2100 switch (X190006) in the NVIDIA dual/single switch cabinet with the standard brackets that are included with the switch.

For cabling guidelines, see Review cabling and configuration considerations.

ONTAP and Linux support

The NVIDIA SN2100 switch is a 10/25/40/100GbE switch running Cumulus Linux. The switch supports the following:

- ONTAP 9.10.1P3 and later

  The SN2100 switch serves Cluster and Storage applications in ONTAP 9.10.1P3 and later over different switch-pairs.

- Cumulus Linux (CL) OS versions
  - Specific CL versions are qualified and supported by NetApp. For current compatibility information, see the NVIDIA Ethernet Switches information page or the NetApp Hardware Universe.
  - In order to download the SN2100 Cumulus software from NVIDIA, you must have login credentials to

access NVIDIA's Enterprise Support Portal. See the Knowledge Base article How to register with NVIDIA for Enterprise Support Portal Access.

- You can install Cumulus Linux when the switch is running Cumulus Linux or ONIE.

What's next?

After you've reviewed the configuration requirements, you can confirm your components and part numbers.

Components and part numbers for NVIDIA SN2100 switches

For NVIDIA SN2100 switch installation and maintenance, be sure to review the list of components and part numbers for the cabinet and rail kit.

Cabinet details

You install the NVIDIA SN2100 switch (X190006) in the NVIDIA dual/single switch cabinet with the standard brackets that are included with the switch.

Rail kit details

The following table lists the part number and description for the SN2100 switches and rail kits:

Part number	Description
X190006-PE	Cluster Switch, NVIDIA SN2100, 16PT 100GbE, PTSX
X190006-PI	Cluster Switch, NVIDIA SN2100, 16PT 100GbE, PSIN
X-MTEF-KIT-D	Rail Kit, NVIDIA Dual switch side by side
X-MTEF-KIT-E	Rail Kit, NVIDIA Single switch short depth

See NVIDIA documentation for details on installing your SN2100 switch and rail kit.

What's next?

After you've confirmed your components and part numbers, you can review the required documentation.

Documentation requirements for NVIDIA SN2100 switches

For NVIDIA SN2100 switch installation and maintenance, be sure to review all the recommended documentation.

Title	Description
NVIDIA Switch Installation Guide	Describes how to install your NVIDIA SN2100 switches.
NS224 NVMe Drive Shelf Cabling Guide	Overview and illustrations showing how to configure cabling for drive shelves.

Title	Description
NetApp Hardware Universe	Allows you to confirm supported hardware, such as storage switches and cables, for your platform model.

Install the hardware

Hardware install workflow for NVIDIA SN2100 switches

To install and configure the hardware for a SN2100 cluster switch, follow these steps:

1. **Install the hardware**

Install the switch hardware.

2. **Review cabling and configuration considerations**

Review requirements for optical connections, the QSA adapter, and the switchport speed.

3. **Cable the NS224 shelves**

Follow the cabling procedures if you have a system in which the NS224 drive shelves need to be cabled as switch-attached storage (not direct-attached storage).

Install the hardware for the NVIDIA SN2100 switch

To install the SN2100 hardware, refer to NVIDIA's documentation.

Steps

1. Review the configuration requirements.
2. Follow the instructions in NVIDIA Switch Installation Guide.

What's next?

After you've installed your hardware, you can review cabling and configuration requirements.

Review cabling and configuration considerations

Before configuring your NVIDIA SN2100 switch, review the following considerations.

NVIDIA port details

Switch ports	Ports usage
swp1s0-3	4x10GbE breakout cluster port nodes
swp2s0-3	4x25GbE breakout cluster port nodes

swp3-14	40/100GbE cluster port nodes
swp15-16	100GbE Inter-Switch Link (ISL) ports

See the Hardware Universe for more information on switch ports.

Link-up delays with optical connections

If you are experiencing link-up delays of more than five seconds, Cumulus Linux 5.4 and later includes support for fast link-up. You can configure the links by using the `nv set` command as follows:

```
nv set interface <interface-id> link fast-linkup on
nv config apply
reload the switchd
```

Show example

```
cumulus@cumulus-cs13:mgmt:~$ nv set interface swp5 link fast-linkup on
cumulus@cumulus-cs13:mgmt:~$ nv config apply
switchd need to reload on this config change

Are you sure? [y/N] y
applied [rev_id: 22]

Only switchd reload required
```

Support for copper connections

The following configuration changes are required to fix this issue.

Cumulus Linux 4.4.3

1. Identify the name for each interface using 40GbE/100GbE copper cables:

```
cumulus@cumulus:mgmt:~$ net show interface pluggables

Interface  Identifier     Vendor Name     Vendor PN    Vendor SN
Vendor Rev
---------  -------------  --------------  -----------  -------------
----------
swp3       0x11 (QSFP28)  Molex           112-00576    93A2229911111
B0
swp4       0x11 (QSFP28)  Molex           112-00576    93A2229922222
B0
```

2. Add the following two lines to the `/etc/cumulus/switchd.conf` file for every port (swp<n>) that is using 40GbE/100GbE copper cables:
   - `interface.swp<n>.enable_media_depended_linkup_flow=TRUE`
   - `interface.swp<n>.enable_short_tuning=TRUE`

   For example:

```
cumulus@cumulus:mgmt:~$ sudo nano /etc/cumulus/switchd.conf
.
.
interface.swp3.enable_media_depended_linkup_flow=TRUE
interface.swp3.enable_short_tuning=TRUE
interface.swp4.enable_media_depended_linkup_flow=TRUE
interface.swp4.enable_short_tuning=TRUE
```

3. Restart the `switchd` service:

```
cumulus@cumulus:mgmt:~$ sudo systemctl restart switchd.service
```

4. Confirm that the ports are up:

```
cumulus@cumulus:mgmt:~$ net show interface all

State  Name      Spd   MTU    Mode       LLDP               Summary
-----  --------- ----  -----  ---------- ------------------ --------
UP     swp3      100G  9216   Trunk/L2                      Master:
bridge(UP)
UP     swp4      100G  9216   Trunk/L2                      Master:
bridge(UP)
```

Cumulus Linux 5.x

1. Identify the name for each interface using 40GbE/100GbE copper cables:

```
cumulus@cumulus:mgmt:~$ nv show interface --view=pluggables

Interface  Identifier     Vendor Name     Vendor PN    Vendor SN
Vendor Rev
---------  -------------  --------------  -----------  -------------
----------
swp3       0x11 (QSFP28)  Molex           112-00576    93A2229911111
B0
swp4       0x11 (QSFP28)  Molex           112-00576    93A2229922222
B0
```

2. Configure the links using the `nv set` command as follows:
   - `nv set interface <interface-id> link fast-linkup on`
   - `nv config apply`
   - Reload the `switchd` service

   For example:

```
cumulus@cumulus:mgmt:~$ nv set interface swp5 link fast-linkup on
cumulus@cumulus:mgmt:~$ nv config apply
switchd need to reload on this config change

Are you sure? [y/N] y
applied [rev_id: 22]

Only switchd reload required
```

3. Confirm that the ports are up:

```
cumulus@cumulus:mgmt:~$ net show interface all

State  Name       Spd   MTU    Mode        LLDP                 Summary
-----  ---------  ----  -----  ----------  -------------------  --------
UP     swp3       100G  9216   Trunk/L2                         Master:
bridge(UP)
UP     swp4       100G  9216   Trunk/L2                         Master:
bridge(UP)
```

See the Knowledge Base article SN2100 switch fails to connect using 40/100GbE copper cables for further details.

On Cumulus Linux 4.4.2, copper connections are not supported on SN2100 switches with X1151A NIC, X1146A NIC, or onboard 100GbE ports.
For example:

- AFF A800 on ports e0a and e0b
- AFF A320 on ports e0g and e0h

QSA module

When using QSFP+ (40GbE) to SFP+ (10GbE) adapters or QSFP28 (100GbE) to SFP28 (25GbE) adapters (QSA), insert them in non-breakout 40GbE/100GbE switch ports (swp3-swp14). Do not insert the QSA module in a port that is configured for breakout.

When a QSA module is used to connect to the 10GbE/25GbE cluster ports on a platform, the link might not come up.

To resolve this issue, do the following:

- For 10GbE, manually set the link speed to 10000 and set auto-negotiation to off.
- For 25GbE, manually set the link speed to 25000 and set auto-negotiation to off.

Setting interface speed on breakout ports

Depending on the transceiver in the switch port, you might need to set the speed on the switch interface to a fixed speed. If using 10GbE and 25GbE breakout ports or QSA module, verify that auto-negotiation is off and set the interface speed on the switch.

Cumulus Linux 4.4.3

For example:

```
cumulus@cumulus:mgmt:~$ net add int swp1s3 link autoneg off && net com
--- /etc/network/interfaces     2019-11-17 00:17:13.470687027 +0000
+++ /run/nclu/ifupdown2/interfaces.tmp  2019-11-24 00:09:19.435226258
+0000
@@ -37,21 +37,21 @@
     alias 10G Intra-Cluster Node
     link-autoneg off
     link-speed 10000  <---- port speed set
     mstpctl-bpduguard yes
     mstpctl-portadminedge yes
     mtu 9216

auto swp1s3
iface swp1s3
     alias 10G Intra-Cluster Node
-    link-autoneg off
+    link-autoneg on
     link-speed 10000 <---- port speed set
     mstpctl-bpduguard yes
     mstpctl-portadminedge yes
     mtu 9216

auto swp2s0
iface swp2s0
     alias 25G Intra-Cluster Node
     link-autoneg off
     link-speed 25000 <---- port speed set
```

Check the interface and port status to verify that the settings are applied:

```
cumulus@cumulus:mgmt:~$ net show interface

State  Name       Spd    MTU    Mode         LLDP              Summary
-----  --------   -----  -----  ----------   ---------------
-------------------------------------
.
.
UP     swp1s0     10G    9216   Trunk/L2     cs07 (e4c)        Master:
br_default(UP)
UP     swp1s1     10G    9216   Trunk/L2     cs07 (e4d)        Master:
br_default(UP)
UP     swp1s2     10G    9216   Trunk/L2     cs08 (e4c)        Master:
br_default(UP)
UP     swp1s3     10G    9216   Trunk/L2     cs08 (e4d)        Master:
br_default(UP)
.
.
UP     swp3       40G    9216   Trunk/L2     cs03 (e4e)        Master:
br_default(UP)
UP     swp4       40G    9216   Trunk/L2     cs04 (e4e)        Master:
br_default(UP)
DN     swp5       N/A    9216   Trunk/L2                       Master:
br_default(UP)
DN     swp6       N/A    9216   Trunk/L2                       Master:
br_default(UP)
DN     swp7       N/A    9216   Trunk/L2                       Master:
br_default(UP)
.
.
UP     swp15      100G   9216   BondMember   cs01 (swp15)      Master:
cluster_isl(UP)
UP     swp16      100G   9216   BondMember   cs01 (swp16)      Master:
cluster_isl(UP)
.
.
```

Cumulus Linux 5.x

For example:

```
cumulus@cumulus:mgmt:~$ nv set interface swp1s3 link auto-negotiate off
cumulus@cumulus:mgmt:~$ nv set interface swp1s3 link speed 10G
cumulus@cumulus:mgmt:~$ nv show interface swp1s3

link

  auto-negotiate        off                     off
off
  duplex                full                    full
full
  speed                 10G                     10G
10G
  fec                   auto                    auto
auto
  mtu                   9216                    9216
9216
[breakout]

  state                 up                      up
up
```

Check the interface and port status to verify that the settings are applied:

```
cumulus@cumulus:mgmt:~$ nv show interface

State  Name       Spd    MTU    Mode         LLDP              Summary
-----  --------   -----  -----  ----------   ---------------
-------------------------------------
.
.
UP     swp1s0     10G    9216   Trunk/L2     cs07 (e4c)        Master:
br_default(UP)
UP     swp1s1     10G    9216   Trunk/L2     cs07 (e4d)        Master:
br_default(UP)
UP     swp1s2     10G    9216   Trunk/L2     cs08 (e4c)        Master:
br_default(UP)
UP     swp1s3     10G    9216   Trunk/L2     cs08 (e4d)        Master:
br_default(UP)
.
.
UP     swp3       40G    9216   Trunk/L2     cs03 (e4e)        Master:
br_default(UP)
UP     swp4       40G    9216   Trunk/L2     cs04 (e4e)        Master:
br_default(UP)
DN     swp5       N/A    9216   Trunk/L2                       Master:
br_default(UP)
DN     swp6       N/A    9216   Trunk/L2                       Master:
br_default(UP)
DN     swp7       N/A    9216   Trunk/L2                       Master:
br_default(UP)
.
.
UP     swp15      100G   9216   BondMember   cs01 (swp15)      Master:
cluster_isl(UP)
UP     swp16      100G   9216   BondMember   cs01 (swp16)      Master:
cluster_isl(UP)
.
.
```

See the Hardware Universeand the Knowledge Base article What additional information do I need to install my equipment that is not in HWU for more information.

What's next?

After you've reviewed your cabling and configuration requirements, you can cable the NS224 shelves as switch-attached storage.

Cable the NS224 shelves as switch-attached storage

If you have a system in which the NS224 drive shelves need to be cabled as switch-attached storage (not direct-attached storage), use the information provided here.

- Cable NS224 drive shelves through storage switches:

  Cabling switch-attached NS224 drive shelves

- Confirm supported hardware, such as storage switches and cables, for your platform model:

  NetApp Hardware Universe

What's next?

After you've cabled your shelves, you can configure the switch.

Configure the software

Software install workflow for NVIDIA SN2100 switches

To install and configure software for a NVIDIA SN2100 switch, follow these steps:

1. **Configure the switch**

   Configure the NVIDIA SN2100 switch.

2. **Install Cumulus Linux in Cumulus mode**

   You can install the Cumulus Linux (CL) OS when the switch is running Cumulus Linux.

3. **Install Cumulus Linux in ONIE mode**

   Alternatively, you can install the Cumulus Linux (CL) OS when the switch is running Cumulus Linux in ONIE mode.

4. **Upgrade your Cumulus Linux version, as required**

   You can upgrade your Cumulus Linux (CL) OS as required.

5. **Install or upgrade the Reference Configuration File (RCF) script**

   There are two RCF scripts available for Clustering and Storage applications. The procedure for each is the same.

6. **Install the CSHM file**

   You can install the applicable configuration file for Ethernet switch health monitoring of NVIDIA cluster switches.

7 Reset the switch to factory defaults

Erase the SN2100 cluster switch settings.

Configure the NVIDIA SN2100 switch

To configure the SN2100 switch, refer to NVIDIA's documentation.

Steps

1. Review the configuration requirements.
2. Follow the instructions in NVIDIA System Bring-Up..

What's next?

After you've configured your switch, you can
install Cumulus Linux in Cumulus mode or
install Cumulus Linux in ONIE mode.

Install Cumulus Linux in Cumulus mode

Follow this procedure to install Cumulus Linux (CL) OS when the switch is running in Cumulus mode.

> Cumulus Linux (CL) OS can be installed either when the switch is running Cumulus Linux or ONIE (see Install in ONIE mode).

Before you begin

Make sure you have the following:

- Intermediate-level Linux knowledge.
- Familiarity with basic text editing, UNIX file permissions, and process monitoring. A variety of text editors are pre-installed, including `vi` and `nano`.
- Access to a Linux or UNIX shell. If you are running Windows, use a Linux environment as your command line tool for interacting with Cumulus Linux.
- The baud rate requirement is set to 115200 on the serial console switch for NVIDIA SN2100 switch console access, as follows:
  - 115200 baud
  - 8 data bits
  - 1 stop bit
  - parity: none
  - flow control: none

About this task

Be aware of the following:

> Each time Cumulus Linux is installed, the entire file system structure is erased and rebuilt.

The default password for the cumulus user account is **cumulus**. The first time you log into Cumulus Linux, you must change this default password. Be sure to update any automation scripts before installing a new image. Cumulus Linux provides command line options to change the default password automatically during the installation process.

Example 1. Steps

Cumulus Linux 4.4.3

1. Log in to the switch.

   First time log in to the switch requires username/password of **cumulus**/**cumulus** with `sudo` privileges.

   ```
   cumulus login: cumulus
   Password: cumulus
   You are required to change your password immediately (administrator
   enforced)
   Changing password for cumulus.
   Current password: cumulus
   New password: <new_password>
   Retype new password: <new_password>
   ```

2. Check the Cumulus Linux version: `net show system`

   ```
   cumulus@cumulus:mgmt:~$ net show system
   Hostname......... cumulus
   Build............ Cumulus Linux 4.4.3
   Uptime........... 0:08:20.860000
   Model............ Mlnx X86
   CPU.............. x86_64 Intel Atom C2558 2.40GHz
   Memory........... 8GB
   Disk............. 14.7GB
   ASIC............. Mellanox Spectrum MT52132
   Ports............ 16 x 100G-QSFP28
   Part Number...... MSN2100-CB2FC
   Serial Number.... MT2105T05177
   Platform Name.... x86_64-mlnx_x86-r0
   Product Name..... MSN2100
   ONIE Version..... 2019.11-5.2.0020-115200
   Base MAC Address. 04:3F:72:43:92:80
   Manufacturer..... Mellanox
   ```

3. Configure the hostname, IP address, subnet mask, and default gateway. The new hostname only becomes effective after restarting the console/SSH session.

   > A Cumulus Linux switch provides at least one dedicated Ethernet management port called `eth0`. This interface is specifically for out-of-band management use. By default, the management interface uses DHCPv4 for addressing.

Do not use an underscore (_), apostrophe ('), or non-ASCII characters in the hostname.

```
cumulus@cumulus:mgmt:~$ net add hostname sw1
cumulus@cumulus:mgmt:~$ net add interface eth0 ip address
10.233.204.71/24
cumulus@cumulus:mgmt:~$ net add interface eth0 ip gateway
10.233.204.1
cumulus@cumulus:mgmt:~$ net pending
cumulus@cumulus:mgmt:~$ net commit
```

This command modifies both the `/etc/hostname` and `/etc/hosts` files.

4. Confirm that the hostname, IP address, subnet mask, and default gateway have been updated.

```
cumulus@sw1:mgmt:~$ hostname sw1
cumulus@sw1:mgmt:~$ ifconfig eth0
eth0: flags=4163<UP,BROADCAST,RUNNING,MULTICAST>  mtu 1500
inet 10.233.204.71  netmask 255.255.254.0  broadcast 10.233.205.255
inet6 fe80::bace:f6ff:fe19:1df6  prefixlen 64  scopeid 0x20<link>
ether b8:ce:f6:19:1d:f6  txqueuelen 1000  (Ethernet)
RX packets 75364  bytes 23013528 (21.9 MiB)
RX errors 0  dropped 7  overruns 0  frame 0
TX packets 4053  bytes 827280 (807.8 KiB)
TX errors 0  dropped 0 overruns 0  carrier 0  collisions 0 device
memory 0xdfc00000-dfc1ffff

cumulus@sw1::mgmt:~$ ip route show vrf mgmt
default via 10.233.204.1 dev eth0
unreachable default metric 4278198272
10.233.204.0/23 dev eth0 proto kernel scope link src 10.233.204.71
127.0.0.0/8 dev mgmt proto kernel scope link src 127.0.0.1
```

5. Set the date, time, time zone, and NTP server on the switch.
   a. Verify the current time zone:

```
cumulus@sw1:~$ cat /etc/timezone
```

   b. Update to the new time zone:

```
cumulus@sw1:~$ sudo dpkg-reconfigure --frontend noninteractive
tzdata
```

c. Verify your current time zone:

```
cumulus@switch:~$ date +%Z
```

d. To set the time zone using the guided wizard, run the following command:

```
cumulus@sw1:~$ sudo dpkg-reconfigure tzdata
```

e. Set the software clock according to the configured time zone:

```
cumulus@switch:~$ sudo date -s "Tue Oct 28 00:37:13 2023"
```

f. Set the current value of the software clock to the hardware clock:

```
cumulus@switch:~$ sudo hwclock -w
```

g. Add an NTP server if required:

```
cumulus@sw1:~$ net add time ntp server <cumulus.network.ntp.org>
iburst
cumulus@sw1:~$ net pending
cumulus@sw1:~$ net commit
```

h. Verify that `ntpd` is running on the system:

```
cumulus@sw1:~$ ps -ef | grep ntp
ntp       4074     1  0 Jun20 ?        00:00:33 /usr/sbin/ntpd -p
/var/run/ntpd.pid -g -u 101:102
```

i. Specify the NTP source interface. By default, the source interface that NTP uses is `eth0`. You can configure a different NTP source interface as follows:

```
cumulus@sw1:~$ net add time ntp source <src_int>
cumulus@sw1:~$ net pending
cumulus@sw1:~$ net commit
```

6. Install Cumulus Linux 4.4.3:

```
cumulus@sw1:mgmt:~$ sudo onie-install -a -i http://<web-server>/<path>/cumulus-linux-4.4.3-mlx-amd64.bin
```

The installer starts the download. Type **y** when prompted.

7. Reboot the NVIDIA SN2100 switch:

```
cumulus@sw1:mgmt:~$ sudo reboot
```

8. The installation starts automatically, and the following GRUB screen choices appear. Do **not** make any selections.
   - Cumulus-Linux GNU/Linux
   - ONIE: Install OS
   - CUMULUS-INSTALL
   - Cumulus-Linux GNU/Linux
9. Repeat steps 1 to 4 to log in.
10. Verify that the Cumulus Linux version is 4.4.3: `net show version`

```
cumulus@sw1:mgmt:~$ net show version
NCLU_VERSION=1.0-cl4.4.3u0
DISTRIB_ID="Cumulus Linux"
DISTRIB_RELEASE=4.4.3
DISTRIB_DESCRIPTION="Cumulus Linux 4.4.3"
```

11. Create a new user and add this user to the `sudo` group. This user only becomes effective after the console/SSH session is restarted.

```
sudo adduser --ingroup netedit admin
```

```
cumulus@sw1:mgmt:~$ sudo adduser --ingroup netedit admin
[sudo] password for cumulus:
Adding user 'admin' ...
Adding new user 'admin' (1001) with group `netedit' ...
Creating home directory '/home/admin' ...
Copying files from '/etc/skel' ...
New password:
Retype new password:
passwd: password updated successfully
Changing the user information for admin
Enter the new value, or press ENTER for the default
Full Name []:
Room Number []:
Work Phone []:
Home Phone []:
Other []:
Is the information correct? [Y/n] y

cumulus@sw1:mgmt:~$ sudo adduser admin sudo
[sudo] password for cumulus:
Adding user `admin' to group `sudo' ...
Adding user admin to group sudo
Done.
cumulus@sw1:mgmt:~$ exit
logout
Connection to 10.233.204.71 closed.

[admin@cycrh6svl01 ~]$ ssh admin@10.233.204.71
admin@10.233.204.71's password:
Linux sw1 4.19.0-cl-1-amd64 #1 SMP Cumulus 4.19.206-1+cl4.4.1u1
(2021-09-09) x86_64
Welcome to NVIDIA Cumulus (R) Linux (R)

For support and online technical documentation, visit
http://www.cumulusnetworks.com/support

The registered trademark Linux (R) is used pursuant to a sublicense
from LMI, the exclusive licensee of Linus Torvalds, owner of the
mark on a world-wide basis.
admin@sw1:mgmt:~$
```

Cumulus Linux 5.4.0

1. Log in to the switch.

   First time log in to the switch requires username/password of **cumulus**/**cumulus** with `sudo`

privileges.

```
cumulus login: cumulus
Password: cumulus
You are required to change your password immediately (administrator
enforced)
Changing password for cumulus.
Current password: cumulus
New password: <new_password>
Retype new password: <new_password>
```

2. Check the Cumulus Linux version: `nv show system`

```
cumulus@cumulus:mgmt:~$ nv show system
operational         applied              description
------------------- -------------------- --------------------
hostname            cumulus              cumulus
build               Cumulus Linux 5.3.0  system build version
uptime              6 days, 8:37:36      system uptime
timezone            Etc/UTC              system time zone
```

3. Configure the hostname, IP address, subnet mask, and default gateway. The new hostname only becomes effective after restarting the console/SSH session.

   A Cumulus Linux switch provides at least one dedicated Ethernet management port called `eth0`. This interface is specifically for out-of-band management use. By default, the management interface uses DHCPv4 for addressing.

   Do not use an underscore (_), apostrophe ('), or non-ASCII characters in the hostname.

```
cumulus@cumulus:mgmt:~$ nv set system hostname sw1
cumulus@cumulus:mgmt:~$ nv set interface eth0 ip address
10.233.204.71/24
cumulus@cumulus:mgmt:~$ nv set interface eth0 ip gateway
10.233.204.1
cumulus@cumulus:mgmt:~$ nv config apply
cumulus@cumulus:mgmt:~$ nv config save
```

   This command modifies both the `/etc/hostname` and `/etc/hosts` files.

4. Confirm that the hostname, IP address, subnet mask, and default gateway have been updated.

```
cumulus@sw1:mgmt:~$ hostname sw1
cumulus@sw1:mgmt:~$ ifconfig eth0
eth0: flags=4163<UP,BROADCAST,RUNNING,MULTICAST>  mtu 1500
inet 10.233.204.71  netmask 255.255.254.0  broadcast 10.233.205.255
inet6 fe80::bace:f6ff:fe19:1df6  prefixlen 64  scopeid 0x20<link>
ether b8:ce:f6:19:1d:f6  txqueuelen 1000  (Ethernet)
RX packets 75364  bytes 23013528 (21.9 MiB)
RX errors 0  dropped 7  overruns 0  frame 0
TX packets 4053  bytes 827280 (807.8 KiB)
TX errors 0  dropped 0 overruns 0  carrier 0  collisions 0 device
memory 0xdfc00000-dfc1ffff

cumulus@sw1::mgmt:~$ ip route show vrf mgmt
default via 10.233.204.1 dev eth0
unreachable default metric 4278198272
10.233.204.0/23 dev eth0 proto kernel scope link src 10.233.204.71
127.0.0.0/8 dev mgmt proto kernel scope link src 127.0.0.1
```

5. Set the time zone, date, time, and NTP server on the switch.
   a. Set the time zone:

```
cumulus@sw1:~$ nv set system timezone US/Eastern
cumulus@sw1:~$ nv config apply
```

   b. Verify your current time zone:

```
cumulus@switch:~$ date +%Z
```

   c. To set the time zone using the guided wizard, run the following command:

```
cumulus@sw1:~$ sudo dpkg-reconfigure tzdata
```

   d. Set the software clock according to the configured time zone:

```
cumulus@sw1:~$ sudo date -s "Tue Oct 28 00:37:13 2023"
```

   e. Set the current value of the software clock to the hardware clock:

```
cumulus@sw1:~$ sudo hwclock -w
```

f. Add an NTP server if required:

```
cumulus@sw1:~$ nv set service ntp mgmt listen eth0
cumulus@sw1:~$ nv set service ntp mgmt server <server> iburst on
cumulus@sw1:~$ nv config apply
cumulus@sw1:~$ nv config save
```

See the Knowledge Base article NTP server configuration is not working with NVIDIA SN2100 switches for further details.

g. Verify that `ntpd` is running on the system:

```
cumulus@sw1:~$ ps -ef | grep ntp
ntp       4074     1  0 Jun20 ?        00:00:33 /usr/sbin/ntpd -p
/var/run/ntpd.pid -g -u 101:102
```

h. Specify the NTP source interface. By default, the source interface that NTP uses is `eth0`. You can configure a different NTP source interface as follows:

```
cumulus@sw1:~$ nv set service ntp default listen <src_int>
cumulus@sw1:~$ nv config apply
```

6. Install Cumulus Linux 5.4.0:

```
cumulus@sw1:mgmt:~$ sudo onie-install -a -i http://<web-
server>/<path>/cumulus-linux-5.4-mlx-amd64.bin
```

The installer starts the download. Type **y** when prompted.

7. Reboot the NVIDIA SN2100 switch:

```
cumulus@sw1:mgmt:~$ sudo reboot
```

8. The installation starts automatically, and the following GRUB screen choices appear. Do **not** make any selections.
   - Cumulus-Linux GNU/Linux
   - ONIE: Install OS
   - CUMULUS-INSTALL
   - Cumulus-Linux GNU/Linux
9. Repeat steps 1 to 4 to log in.
10. Verify that the Cumulus Linux version is 5.4.0: `nv show system`

```
cumulus@cumulus:mgmt:~$ nv show system
operational          applied              description
-------------------- -------------------- --------------------
hostname             cumulus              cumulus
build                Cumulus Linux 5.4.0  system build version
uptime               6 days, 13:37:36     system uptime
timezone             Etc/UTC              system time zone
```

11. Verify that the nodes each have a connection to each switch:

```
cumulus@sw1:mgmt:~$ net show lldp

LocalPort  Speed  Mode        RemoteHost
RemotePort
---------  -----  ----------  ---------------------------------
-----------
eth0       100M   Mgmt        mgmt-sw1
Eth110/1/29
swp2s1     25G    Trunk/L2    node1
e0a
swp15      100G   BondMember  sw2
swp15
swp16      100G   BondMember  sw2
swp16
```

12. Create a new user and add this user to the `sudo` group. This user only becomes effective after the console/SSH session is restarted.

```
sudo adduser --ingroup netedit admin
```

```
cumulus@sw1:mgmt:~$ sudo adduser --ingroup netedit admin
[sudo] password for cumulus:
Adding user 'admin' ...
Adding new user 'admin' (1001) with group `netedit' ...
Creating home directory '/home/admin' ...
Copying files from '/etc/skel' ...
New password:
Retype new password:
passwd: password updated successfully
Changing the user information for admin
Enter the new value, or press ENTER for the default
Full Name []:
Room Number []:
Work Phone []:
Home Phone []:
Other []:
Is the information correct? [Y/n] y

cumulus@sw1:mgmt:~$ sudo adduser admin sudo
[sudo] password for cumulus:
Adding user `admin' to group `sudo' ...
Adding user admin to group sudo
Done.
cumulus@sw1:mgmt:~$ exit
logout
Connection to 10.233.204.71 closed.

[admin@cycrh6svl01 ~]$ ssh admin@10.233.204.71
admin@10.233.204.71's password:
Linux sw1 4.19.0-cl-1-amd64 #1 SMP Cumulus 4.19.206-1+cl4.4.1u1
(2021-09-09) x86_64
Welcome to NVIDIA Cumulus (R) Linux (R)

For support and online technical documentation, visit
http://www.cumulusnetworks.com/support

The registered trademark Linux (R) is used pursuant to a sublicense
from LMI, the exclusive licensee of Linus Torvalds, owner of the
mark on a world-wide basis.
admin@sw1:mgmt:~$
```

13. Add additional user groups for the admin user to access `nv` commands:

```
cumulus@sw1:mgmt:~$ sudo adduser admin nvshow
     [sudo] password for cumulus:
     Adding user 'admin' to group 'nvshow' ...
     Adding user admin to group nvshow
     Done.
```

See NVIDIA User Accounts for more information.

Cumulus Linux 5.11.0

1. Log in to the switch.

   When you log in to the switch for the first time, it requires the username/password of **cumulus** /**cumulus** with `sudo` privileges.

```
cumulus login: cumulus
Password: cumulus
You are required to change your password immediately (administrator
enforced)
Changing password for cumulus.
Current password: cumulus
New password: <new_password>
Retype new password: <new_password>
```

2. Check the Cumulus Linux version: `nv show system`

```
cumulus@cumulus:mgmt:~$ nv show system
operational         applied              description
------------------- -------------------- --------------------
hostname            cumulus              cumulus
build               Cumulus Linux 5.4.0  system build version
uptime              6 days, 8:37:36      system uptime
timezone            Etc/UTC              system time zone
```

3. Configure the hostname, IP address, subnet mask, and default gateway. The new hostname only becomes effective after restarting the console/SSH session.

   A Cumulus Linux switch provides at least one dedicated Ethernet management port called `eth0`. This interface is specifically for out-of-band management use. By default, the management interface uses DHCPv4 for addressing.

   Do not use an underscore (_), apostrophe ('), or non-ASCII characters in the hostname.

```
cumulus@cumulus:mgmt:~$ nv unset interface eth0 ip address dhcp
cumulus@cumulus:mgmt:~$ nv set interface eth0 ip address
10.233.204.71/24
cumulus@cumulus:mgmt:~$ nv set interface eth0 ip gateway
10.233.204.1
cumulus@cumulus:mgmt:~$ nv config apply
cumulus@cumulus:mgmt:~$ nv config save
```

This command modifies both the `/etc/hostname` and `/etc/hosts` files.

4. Confirm that the hostname, IP address, subnet mask, and default gateway have been updated.

```
cumulus@sw1:mgmt:~$ hostname sw1
cumulus@sw1:mgmt:~$ ifconfig eth0
eth0: flags=4163<UP,BROADCAST,RUNNING,MULTICAST>  mtu 1500
inet 10.233.204.71  netmask 255.255.254.0  broadcast 10.233.205.255
inet6 fe80::bace:f6ff:fe19:1df6  prefixlen 64  scopeid 0x20<link>
ether b8:ce:f6:19:1d:f6  txqueuelen 1000  (Ethernet)
RX packets 75364  bytes 23013528 (21.9 MiB)
RX errors 0  dropped 7  overruns 0  frame 0
TX packets 4053  bytes 827280 (807.8 KiB)
TX errors 0  dropped 0 overruns 0  carrier 0  collisions 0 device
memory 0xdfc00000-dfc1ffff

cumulus@sw1::mgmt:~$ ip route show vrf mgmt
default via 10.233.204.1 dev eth0
unreachable default metric 4278198272
10.233.204.0/23 dev eth0 proto kernel scope link src 10.233.204.71
127.0.0.0/8 dev mgmt proto kernel scope link src 127.0.0.1
```

5. Set the time zone, date, time, and NTP server on the switch.
   a. Set the time zone:

```
cumulus@sw1:~$ nv set system timezone US/Eastern
cumulus@sw1:~$ nv config apply
```

   b. Verify your current time zone:

```
cumulus@switch:~$ date +%Z
```

   c. To set the time zone using the guided wizard, run the following command:

```
cumulus@sw1:~$ sudo dpkg-reconfigure tzdata
```

d. Set the software clock according to the configured time zone:

```
cumulus@sw1:~$ sudo date -s "Tue Oct 28 00:37:13 2023"
```

e. Set the current value of the software clock to the hardware clock:

```
cumulus@sw1:~$ sudo hwclock -w
```

f. Add an NTP server if required:

```
cumulus@sw1:~$ nv set service ntp mgmt listen eth0
cumulus@sw1:~$ nv set service ntp mgmt server <server> iburst on
cumulus@sw1:~$ nv config apply
cumulus@sw1:~$ nv config save
```

See the Knowledge Base article NTP server configuration is not working with NVIDIA SN2100 switches for further details.

g. Verify that `ntpd` is running on the system:

```
cumulus@sw1:~$ ps -ef | grep ntp
ntp       4074     1  0 Jun20 ?        00:00:33 /usr/sbin/ntpd -p
/var/run/ntpd.pid -g -u 101:102
```

h. Specify the NTP source interface. By default, the source interface that NTP uses is `eth0`. You can configure a different NTP source interface as follows:

```
cumulus@sw1:~$ nv set service ntp default listen <src_int>
cumulus@sw1:~$ nv config apply
```

6. Install Cumulus Linux 5.11.0:

```
cumulus@sw1:mgmt:~$ sudo onie-install -a -i http://<web-
server>/<path>/cumulus-linux-5.11.0-mlx-amd64.bin
```

The installer starts the download. Type **y** when prompted.

7. Reboot the NVIDIA SN2100 switch:

```
cumulus@sw1:mgmt:~$ sudo reboot
```

8. The installation starts automatically, and the following GRUB screen choices appear. Do **not** make any selections.
   - Cumulus-Linux GNU/Linux
   - ONIE: Install OS
   - CUMULUS-INSTALL
   - Cumulus-Linux GNU/Linux
9. Repeat steps 1 to 4 to log in.
10. Verify that the Cumulus Linux version is 5.11.0:

    `nv show system`

```
cumulus@cumulus:mgmt:~$ nv show system
operational         applied                 description
------------------- ----------------------- --------------------
build               Cumulus Linux 5.11.0
uptime              153 days, 2:44:16
hostname            cumulus                 cumulus
product-name        Cumulus Linux
product-release     5.11.0
platform            x86_64-mlnx_x86-r0
system-memory       2.76 GB used / 2.28 GB free / 7.47 GB total
swap-memory         0 Bytes used / 0 Bytes free / 0 Bytes total
health-status       not OK
date-time           2025-04-23 09:55:24
status              N/A
timezone            Etc/UTC
maintenance
  mode              disabled
  ports             enabled
version
  kernel            6.1.0-cl-1-amd64
  build-date        Thu Nov 14 13:06:38 UTC 2024
  image             5.11.0
  onie              2019.11-5.2.0020-115200
```

11. Verify that each node has a connection to each switch:

```
cumulus@sw1:mgmt:~$ nv show interface lldp

LocalPort  Speed  Mode        RemoteHost
RemotePort
---------  -----  ----------  ---------------------------------
-----------
eth0       100M   eth   mgmt-sw1
Eth110/1/14
swp2s1     25G    Trunk/L2    node1
e0a
swp1s1     10G    swp   sw2
e0a
swp9       100G   swp   sw3
e4a
swp10      100G   swp   sw4
e4a
swp15      100G   swp   sw5
swp15
swp16      100G   swp   sw6
swp16
```

See NVIDIA User Accounts for more information.

What's next?

After you've installed Cumulus Linux in Cumulus mode, you install the Reference Configuration File (RCF) script.

Install Cumulus Linux in ONIE mode

Follow this procedure to install Cumulus Linux (CL) OS when the switch is running in ONIE mode.

Cumulus Linux (CL) OS can be installed either when the switch is running ONIE or Cumulus Linux (see Install in Cumulus mode).

About this task

You can install Cumulus Linux using Open Network Install Environment (ONIE) that allows for automatic discovery of a network installer image. This facilitates the system model of securing switches with an operating system choice, such as Cumulus Linux. The easiest way to install Cumulus Linux with ONIE is with local HTTP discovery.

If your host is IPv6-enabled, make sure it is running a web server. If your host is IPv4-enabled, make sure it is running DHCP in addition to a web server.

This procedure demonstrates how to upgrade Cumulus Linux after the admin has booted in ONIE.

Example 2. Steps

Cumulus Linux 4.4.3

1. Download the Cumulus Linux installation file to the root directory of the web server. Rename this file to: `onie-installer`.
2. Connect your host to the management Ethernet port of the switch using an Ethernet cable.
3. Power on the switch.

   The switch downloads the ONIE image installer and boots. After the installation completes, the Cumulus Linux login prompt appears in the terminal window.

   Each time Cumulus Linux is installed, the entire file system structure is erased and rebuilt.

4. Reboot the SN2100 switch:

```
cumulus@cumulus:mgmt:~$ sudo reboot
```

5. Press the **Esc** key at the GNU GRUB screen to interrupt the normal boot process, select **ONIE**, and press **Enter**.
6. On the next screen, select **ONIE: Install OS**.
7. The ONIE installer discovery process runs searching for the automatic installation. Press **Enter** to temporarily stop the process.
8. When the discovery process has stopped:

```
ONIE:/ # onie-stop
discover: installer mode detected.
Stopping: discover...start-stop-daemon: warning: killing process
427:
No such process done.
```

9. If the DHCP service is running on your network, verify that the IP address, subnet mask, and the default gateway are correctly assigned:

```
ifconfig eth0
```

```
ONIE:/ # ifconfig eth0
eth0   Link encap:Ethernet  HWaddr B8:CE:F6:19:1D:F6
       inet addr:10.233.204.71  Bcast:10.233.205.255
Mask:255.255.254.0
       inet6 addr: fe80::bace:f6ff:fe19:1df6/64 Scope:Link
       UP BROADCAST RUNNING MULTICAST  MTU:1500  Metric:1
       RX packets:21344 errors:0 dropped:2135 overruns:0 frame:0
       TX packets:3500 errors:0 dropped:0 overruns:0 carrier:0
       collisions:0 txqueuelen:1000
       RX bytes:6119398 (5.8 MiB)  TX bytes:472975 (461.8 KiB)
       Memory:dfc00000-dfc1ffff

ONIE:/ # route
Kernel IP routing table
Destination     Gateway         Genmask         Flags Metric Ref
Use Iface

default         10.233.204.1    0.0.0.0         UG    0      0
0   eth0
10.233.204.0    *               255.255.254.0   U     0      0
0   eth0
```

10. If the IP addressing scheme is manually defined, do the following:

```
ONIE:/ # ifconfig eth0 10.233.204.71 netmask 255.255.254.0
ONIE:/ # route add default gw 10.233.204.1
```

11. Repeat step 9 to verify that the static information is correctly entered.
12. Install Cumulus Linux:

```
# onie-nos-install http://<web-server>/<path>/cumulus-linux-4.4.3-
mlx-amd64.bin
```

```
ONIE:/ # route

  Kernel IP routing table

  ONIE:/ # onie-nos-install http://<web-server>/<path>/cumulus-
linux-4.4.3-mlx-amd64.bin

  Stopping: discover... done.
  Info: Attempting
http://10.60.132.97/x/eng/testbedN,svl/nic/files/cumulus-linux-
4.4.3-mlx-amd64.bin ...
  Connecting to 10.60.132.97 (10.60.132.97:80)
  installer            100% |*|   552M  0:00:00 ETA
  ...
  ...
```

13. After the installation has completed, log in to the switch.

```
cumulus login: cumulus
Password: cumulus
You are required to change your password immediately (administrator
enforced)
Changing password for cumulus.
Current password: cumulus
New password: <new_password>
Retype new password: <new_password>
```

14. Verify the Cumulus Linux version: `net show version`

```
cumulus@cumulus:mgmt:~$ net show version
NCLU_VERSION=1.0-cl4.4.3u4
DISTRIB_ID="Cumulus Linux"
DISTRIB_RELEASE=4.4.3
DISTRIB_DESCRIPTION="Cumulus Linux 4.4.3”
```

Cumulus Linux 5.x

1. Download the Cumulus Linux installation file to the root directory of the web server. Rename this file to: `onie-installer`.
2. Connect your host to the management Ethernet port of the switch using an Ethernet cable.
3. Power on the switch.

   The switch downloads the ONIE image installer and boots. After the installation completes, the Cumulus Linux login prompt appears in the terminal window.

Each time Cumulus Linux is installed, the entire file system structure is erased and rebuilt.

4. Reboot the SN2100 switch:

```
cumulus@cumulus:mgmt:~$ sudo reboot
.
.
GNU GRUB version 2.06-3
+-------------------------------------------------------------------------
------+
| Cumulus-Linux GNU/Linux
|
| Advanced options for Cumulus-Linux GNU/Linux
|
| ONIE
|
|
|
|
|
|
|
|
|
|
|
|
|
|
|
|
|
+-------------------------------------------------------------------------
------+
```

5. Press the Esc key at the GNU GRUB screen to interrupt the normal boot process, select ONIE, and press Enter.

```
.
.
Loading ONIE ...

GNU GRUB version 2.02
+-------------------------------------------------------------------------
------+
| ONIE: Install OS
|
| ONIE: Rescue
|
| ONIE: Uninstall OS
|
| ONIE: Update ONIE
|
| ONIE: Embed ONIE
|
|
|
|
|
|
|
|
|
|
|
+-------------------------------------------------------------------------
------+
```

Select ONIE: **Install OS.**

6. The ONIE installer discovery process runs searching for the automatic installation. Press **Enter** to temporarily stop the process.
7. When the discovery process has stopped:

```
ONIE:/ # onie-stop
discover: installer mode detected.
Stopping: discover...start-stop-daemon: warning: killing process
427:
No such process done.
```

8. Configure the IP address, subnet mask, and the default gateway:

```
ifconfig eth0
```

```
ONIE:/ # ifconfig eth0
eth0   Link encap:Ethernet  HWaddr B8:CE:F6:19:1D:F6
       inet addr:10.233.204.71  Bcast:10.233.205.255
Mask:255.255.254.0
       inet6 addr: fe80::bace:f6ff:fe19:1df6/64 Scope:Link
       UP BROADCAST RUNNING MULTICAST  MTU:1500  Metric:1
       RX packets:21344 errors:0 dropped:2135 overruns:0 frame:0
       TX packets:3500 errors:0 dropped:0 overruns:0 carrier:0
       collisions:0 txqueuelen:1000
       RX bytes:6119398 (5.8 MiB)  TX bytes:472975 (461.8 KiB)
       Memory:dfc00000-dfc1ffff
ONIE:/ #
ONIE:/ # ifconfig eth0 10.228.140.27 netmask 255.255.248.0
ONIE:/ # ifconfig eth0
eth0   Link encap:Ethernet HWaddr B8:CE:F6:5E:05:E6
       inet addr:10.228.140.27 Bcast:10.228.143.255
Mask:255.255.248.0
       inet6 addr: fd20:8b1e:b255:822b:bace:f6ff:fe5e:5e6/64
Scope:Global
       inet6 addr: fe80::bace:f6ff:fe5e:5e6/64 Scope:Link
       UP BROADCAST RUNNING MULTICAST MTU:1500 Metric:1
       RX packets:18813 errors:0 dropped:1418 overruns:0 frame:0
       TX packets:491 errors:0 dropped:0 overruns:0 carrier:0
       collisions:0 txqueuelen:1000
       RX bytes:1339596 (1.2 MiB) TX bytes:49379 (48.2 KiB)
       Memory:dfc00000-dfc1ffff
ONIE:/ # route add default gw 10.228.136.1
ONIE:/ # route
Kernel IP routing table
Destination     Gateway         Genmask         Flags Metric Ref
Use Iface

default         10.228.136.1    0.0.0.0         UG    0      0
0   eth0
10.228.136.1    *               255.255.248.0   U     0      0
0   eth0
```

9. Install Cumulus Linux 5.4:

```
# onie-nos-install http://<web-server>/<path>/cumulus-linux-5.4-mlx-
amd64.bin
```

```
ONIE:/ # route

  Kernel IP routing table

  ONIE:/ # onie-nos-install http://<web-server>/<path>/cumulus-
linux-5.4-mlx-amd64.bin

  Stopping: discover... done.
  Info: Attempting
http://10.60.132.97/x/eng/testbedN,svl/nic/files/cumulus-linux-5.4-
mlx-amd64.bin ...
  Connecting to 10.60.132.97 (10.60.132.97:80)
  installer            100% |*|   552M  0:00:00 ETA
  ...
  ...
```

10. After the installation has completed, log in to the switch.

```
cumulus login: cumulus
Password: cumulus
You are required to change your password immediately (administrator
enforced)
Changing password for cumulus.
Current password: cumulus
New password: <new_password>
Retype new password: <new_password>
```

11. Verify the Cumulus Linux version: `nv show system`

```
cumulus@cumulus:mgmt:~$ nv show system
operational         applied              description
------------------- -------------------- --------------------
hostname            cumulus              cumulus
build               Cumulus Linux 5.4.0  system build version
uptime              6 days, 13:37:36     system uptime
timezone            Etc/UTC              system time zone
```

12. Create a new user and add this user to the `sudo` group. This user only becomes effective after the console/SSH session is restarted.

```
sudo adduser --ingroup netedit admin
```

```
cumulus@sw1:mgmt:~$ sudo adduser --ingroup netedit admin
[sudo] password for cumulus:
Adding user 'admin' ...
Adding new user 'admin' (1001) with group `netedit' ...
Creating home directory '/home/admin' ...
Copying files from '/etc/skel' ...
New password:
Retype new password:
passwd: password updated successfully
Changing the user information for admin
Enter the new value, or press ENTER for the default
Full Name []:
Room Number []:
Work Phone []:
Home Phone []:
Other []:
Is the information correct? [Y/n] y

cumulus@sw1:mgmt:~$ sudo adduser admin sudo
[sudo] password for cumulus:
Adding user `admin' to group `sudo' ...
Adding user admin to group sudo
Done.
cumulus@sw1:mgmt:~$ exit
logout
Connection to 10.233.204.71 closed.

[admin@cycrh6svl01 ~]$ ssh admin@10.233.204.71
admin@10.233.204.71's password:
Linux sw1 4.19.0-cl-1-amd64 #1 SMP Cumulus 4.19.206-1+cl4.4.1u1
(2021-09-09) x86_64
Welcome to NVIDIA Cumulus (R) Linux (R)

For support and online technical documentation, visit
http://www.cumulusnetworks.com/support

The registered trademark Linux (R) is used pursuant to a sublicense
from LMI, the exclusive licensee of Linus Torvalds, owner of the
mark on a world-wide basis.
admin@sw1:mgmt:~$
```

13. Add additional user groups for the admin user to access `nv` commands:

```
cumulus@cumulus:mgmt:~$ sudo adduser admin nvshow
     [sudo] password for cumulus:
     Adding user `admin' to group `nvshow' ...
     Adding user admin to group nvshow
     Done.
```

See NVIDIA User Accounts for more information.

What's next?

After you've installed Cumulus Linux in ONIE mode, you can install the Reference Configuration File (RCF) script.

Upgrade Cumulus Linux versions

Complete the following procedure to upgrade your Cumulus Linux version as required.

Before you begin

Make sure you have the following:

- Intermediate-level Linux knowledge.
- Familiarity with basic text editing, UNIX file permissions, and process monitoring. A variety of text editors are pre-installed, including `vi` and `nano`.
- Access to a Linux or UNIX shell. If you are running Windows, use a Linux environment as your command line tool for interacting with Cumulus Linux.
- The baud rate requirement is set to 115200 on the serial console switch for NVIDIA SN2100 switch console access, as follows:
  - 115200 baud
  - 8 data bits
  - 1 stop bit
  - parity: none
  - flow control: none

About this task

Be aware of the following:

Each time Cumulus Linux is upgraded, the entire file system structure is erased and rebuilt. Your existing configuration will be erased. You must save and record your switch configuration before updating Cumulus Linux.

The default password for the cumulus user account is **cumulus**. The first time you log into Cumulus Linux, you must change this default password. You must update any automation scripts before installing a new image. Cumulus Linux provides command line options to change the default password automatically during the installation process.

See Installing a New Cumulus Linux Image for further information.

Example 3. Steps

Cumulus Linux 4.4.x to Cumulus Linux 5.4.0

1. Connect the cluster switch to the management network.
2. Use the ping command to verify connectivity to the server hosting the Cumulus Linux and the RCF.
3. Display the cluster ports on each node that are connected to the cluster switches:

   ```
   network device-discovery show
   ```

4. Check the administrative and operational status of each cluster port.
   a. Verify that all the cluster ports are up with a healthy status:

      ```
      network port show -role cluster
      ```

   b. Verify that all the cluster interfaces (LIFs) are on the home port:

      ```
      network interface show -role cluster
      ```

   c. Verify that the cluster displays information for both cluster switches:

      ```
      system cluster-switch show -is-monitoring-enabled-operational true
      ```

5. Disable auto-revert on the cluster LIFs. The cluster LIFs fail over to the partner cluster switch and remain there as you perform the upgrade procedure on the targeted switch:

   ```
   network interface modify -vserver Cluster -lif * -auto-revert false
   ```

6. Check the current Cumulus Linux version and connected ports:

```
cumulus@cumulus:mgmt:~$ net show system
Hostname......... cumulus
Build............ Cumulus Linux 4.4.3
Uptime........... 0:08:20.860000
Model............ Mlnx X86
CPU.............. x86_64 Intel Atom C2558 2.40GHz
Memory........... 8GB
Disk............. 14.7GB
ASIC............. Mellanox Spectrum MT52132
Ports............ 16 x 100G-QSFP28
Part Number...... MSN2100-CB2FC
Serial Number.... MT2105T05177
Platform Name.... x86_64-mlnx_x86-r0
Product Name..... MSN2100
ONIE Version..... 2019.11-5.2.0020-115200
Base MAC Address. 04:3F:72:43:92:80
Manufacturer..... Mellanox

cumulus@cumulus:mgmt:~$ net show interface

State  Name    Spd   MTU    Mode        LLDP
Summary
-----  ------  ----  -----  ----------  ----------------------
--------------------
.
.
UP     swp1    100G  9216   Trunk/L2    node1 (e5b)
Master: bridge(UP)
UP     swp2    100G  9216   Trunk/L2    node2 (e5b)
Master: bridge(UP)
UP     swp3    100G  9216   Trunk/L2    SHFFG1826000112 (e0b)
Master: bridge(UP)
UP     swp4    100G  9216   Trunk/L2    SHFFG1826000112 (e0b)
Master: bridge(UP)
UP     swp5    100G  9216   Trunk/L2    SHFFG1826000102 (e0b)
Master: bridge(UP)
UP     swp6    100G  9216   Trunk/L2    SHFFG1826000102 (e0b)
Master: bridge(UP))
.
.
```

7. Download the Cumulux Linux 5.4.0 image:

```
cumulus@cumulus:mgmt:~$ sudo onie-install -a -i http://<ip-to-
webserver>/path/to/cumulus-linux-5.4.0-mlx-amd64.bin
[sudo] password for cumulus:
Fetching installer: http://<ip-to-webserver>/path/to/cumulus-linux-
5.4.0-mlx-amd64.bin
Downloading URL: http://<ip-to-webserver>/path/to/cumulus-linux-
5.4.0-mlx-amd64.bin
# 100.0%
Success: HTTP download complete.
EFI variables are not supported on this system
Warning: SecureBoot is not available.
Image is signed.
.
.
.
Staging installer image...done.
WARNING:
WARNING: Activating staged installer requested.
WARNING: This action will wipe out all system data.
WARNING: Make sure to back up your data.
WARNING:
Are you sure (y/N)? y
Activating staged installer...done.
Reboot required to take effect.
```

8. Reboot the switch:

```
cumulus@cumulus:mgmt:~$ sudo reboot
```

9. Change the password:

```
cumulus login: cumulus
Password:
You are required to change your password immediately (administrator
enforced)
Changing password for cumulus.
Current password: cumulus
New password: <new_password>
Retype new password: <new_password>
Linux cumulus 5.10.0-cl-1-amd64 #1 SMP Debian 5.10.162-1+cl5.4.0u1
(2023-01-20) x86_64

Welcome to NVIDIA Cumulus (R) Linux (R)

ZTP in progress. To disable, do 'ztp -d'
```

10. Check the Cumulus Linux version: `nv show system`

```
cumulus@cumulus:mgmt:~$ nv show system
           operational    applied
---------- -------------- ----------
hostname   cumulus        cumulus
build      Cumulus Linux 5.4.0
uptime     14:07:08
timezone   Etc/UTC
```

11. Change the hostname:

```
cumulus@cumulus:mgmt:~$ nv set system hostname sw1
cumulus@cumulus:mgmt:~$ nv config apply
Warning: The following files have been changed since the last save,
and they WILL be overwritten.
- /etc/nsswitch.conf
- /etc/synced/synced.conf
.
.
```

12. Logout and log in to the switch again to see the updated switch name at the prompt:

```
cumulus@cumulus:mgmt:~$ exit
logout

Debian GNU/Linux 10 cumulus ttyS0

cumulus login: cumulus
Password:
Last login: Tue Dec 15 21:43:13 UTC 2020 on ttyS0
Linux cumulus 5.10.0-cl-1-amd64 #1 SMP Debian 5.10.162-1+cl5.4.0u1
(2023-01-20) x86_64

Welcome to NVIDIA Cumulus (R) Linux (R)


ZTP in progress. To disable, do 'ztp -d'

cumulus@sw1:mgmt:~$
```

13. Set the IP address:

```
cumulus@sw1:mgmt:~$ nv set interface eth0 ip address
10.231.80.206/22
cumulus@sw1:mgmt:~$ nv set interface eth0 ip gateway 10.231.80.1
cumulus@sw1:mgmt:~$ nv config apply
applied [rev_id: 2]
cumulus@sw1:mgmt:~$ ip route show vrf mgmt
default via 10.231.80.1 dev eth0 proto kernel
unreachable default metric 4278198272
10.231.80.0/22 dev eth0 proto kernel scope link src 10.231.80.206
127.0.0.0/8 dev mgmt proto kernel scope link src 127.0.0.1
```

14. Create a new user and add this user to the `sudo` group. This user only becomes effective after the console/SSH session is restarted.

```
sudo adduser --ingroup netedit admin
```

```
cumulus@sw1:mgmt:~$ sudo adduser --ingroup netedit admin
[sudo] password for cumulus:
Adding user 'admin' ...
Adding new user 'admin' (1001) with group `netedit' ...
Creating home directory '/home/admin' ...
Copying files from '/etc/skel' ...
New password:
Retype new password:
passwd: password updated successfully
Changing the user information for admin
Enter the new value, or press ENTER for the default
Full Name []:
Room Number []:
Work Phone []:
Home Phone []:
Other []:
Is the information correct? [Y/n] y

cumulus@sw1:mgmt:~$ sudo adduser admin sudo
[sudo] password for cumulus:
Adding user `admin' to group `sudo' ...
Adding user admin to group sudo
Done.
cumulus@sw1:mgmt:~$ exit
logout
Connection to 10.233.204.71 closed.

[admin@cycrh6svl01 ~]$ ssh admin@10.233.204.71
admin@10.233.204.71's password:
Linux sw1 4.19.0-cl-1-amd64 #1 SMP Cumulus 4.19.206-1+cl4.4.1u1
(2021-09-09) x86_64
Welcome to NVIDIA Cumulus (R) Linux (R)

For support and online technical documentation, visit
http://www.cumulusnetworks.com/support

The registered trademark Linux (R) is used pursuant to a sublicense
from LMI, the exclusive licensee of Linus Torvalds, owner of the
mark on a world-wide basis.
admin@sw1:mgmt:~$
```

15. Add additional user groups for the admin user to access `nv` commands:

```
cumulus@sw1:mgmt:~$ sudo adduser admin nvshow
     [sudo] password for cumulus:
     Adding user `admin' to group `nvshow' ...
     Adding user admin to group nvshow
     Done.
```

See NVIDIA User Accounts for more information.

Cumulus Linux 5.x to Cumulus Linux 5.4.0

1. Connect the cluster switch to the management network.
2. Use the ping command to verify connectivity to the server hosting the Cumulus Linux and the RCF.
3. Display the cluster ports on each node that are connected to the cluster switches:

   ```
   network device-discovery show
   ```

4. Check the administrative and operational status of each cluster port.
   a. Verify that all the cluster ports are up with a healthy status:

      ```
      network port show -role cluster
      ```

   b. Verify that all the cluster interfaces (LIFs) are on the home port:

      ```
      network interface show -role cluster
      ```

   c. Verify that the cluster displays information for both cluster switches:

      ```
      system cluster-switch show -is-monitoring-enabled-operational true
      ```

5. Disable auto-revert on the cluster LIFs. The cluster LIFs fail over to the partner cluster switch and remain there as you perform the upgrade procedure on the targeted switch:

   ```
   network interface modify -vserver Cluster -lif * -auto-revert false
   ```

6. Check the current Cumulus Linux version and connected ports:

```
cumulus@sw1:mgmt:~$ nv show system
                    operational          applied
------------------- -------------------- -----------------
hostname            cumulus              cumulus
build               Cumulus Linux 5.3.0
uptime              6 days, 8:37:36
timezone            Etc/UTC

cumulus@sw1:mgmt:~$ nv show interface
Interface     MTU   Speed State Remote Host         Remote Port-
Type      Summary
------------ ----- ----- ----- ------------------- ------------
--------- -------------
+ cluster_isl 9216  200G  up
bond
+ eth0        1500  100M  up    mgmt-sw1            Eth105/1/14
eth       IP Address: 10.231.80 206/22
  eth0
IP Address: fd20:8b1e:f6ff:fe31:4a0e/64
+ lo          65536       up
loopback  IP Address: 127.0.0.1/8
  lo
IP Address: ::1/128
+ swp1s0      9216 10G    up cluster01                e0b
swp
.
.
.
+ swp15      9216 100G    up sw2                      swp15
swp
+ swp16      9216 100G    up sw2                      swp16
swp
```

7. Download the Cumulux Linux 5.4.0 image:

```
cumulus@sw1:mgmt:~$ sudo onie-install -a -i http://<ip-to-
webserver>/path/to/cumulus-linux-5.4.0-mlx-amd64.bin
[sudo] password for cumulus:
Fetching installer: http://<ip-to-webserver>/path/to/cumulus-linux-
5.4.0-mlx-amd64.bin
Downloading URL: http://<ip-to-webserver>/path/to/cumulus-linux-
5.4.0-mlx-amd64.bin
# 100.0%
Success: HTTP download complete.
EFI variables are not supported on this system
Warning: SecureBoot is not available.
Image is signed.
.
.
.
Staging installer image...done.
WARNING:
WARNING: Activating staged installer requested.
WARNING: This action will wipe out all system data.
WARNING: Make sure to back up your data.
WARNING:
Are you sure (y/N)? y
Activating staged installer...done.
Reboot required to take effect.
```

8. Reboot the switch:

```
cumulus@sw1:mgmt:~$ sudo reboot
```

9. Change the password:

```
cumulus login: cumulus
Password:
You are required to change your password immediately (administrator
enforced)
Changing password for cumulus.
Current password: cumulus
New password: <new_password>
Retype new password: <new_password>
Linux cumulus 5.10.0-cl-1-amd64 #1 SMP Debian 5.10.162-1+cl5.4.0u1
(2023-01-20) x86_64

Welcome to NVIDIA Cumulus (R) Linux (R)

ZTP in progress. To disable, do 'ztp -d'
```

10. Check the Cumulus Linux version: `nv show system`

```
cumulus@cumulus:mgmt:~$ nv show system
operational    applied
-------------- ----------------
hostname       cumulus cumulus
build          Cumulus Linux 5.4.0
uptime         14:07:08
timezone       Etc/UTC
```

11. Change the hostname:

```
cumulus@cumulus:mgmt:~$ nv set system hostname sw1
cumulus@cumulus:mgmt:~$ nv config apply
Warning: The following files have been changed since the last save,
and they WILL be overwritten.
- /etc/nsswitch.conf
- /etc/synced/synced.conf
.
.
```

12. Logout and log in again to the switch to see the updated switch name at the prompt:

```
cumulus@cumulus:mgmt:~$ exit
logout

Debian GNU/Linux 10 cumulus ttyS0

cumulus login: cumulus
Password:
Last login: Tue Dec 15 21:43:13 UTC 2020 on ttyS0
Linux cumulus 5.10.0-cl-1-amd64 #1 SMP Debian 5.10.162-1+cl5.4.0u1
(2023-01-20) x86_64

Welcome to NVIDIA Cumulus (R) Linux (R)


ZTP in progress. To disable, do 'ztp -d'

cumulus@sw1:mgmt:~$
```

13. Set the IP address:

```
cumulus@sw1:mgmt:~$ nv unset interface eth0 ip address dhcp
cumulus@sw1:mgmt:~$ nv set interface eth0 ip address
10.231.80.206/22
cumulus@sw1:mgmt:~$ nv set interface eth0 ip gateway 10.231.80.1
cumulus@sw1:mgmt:~$ nv config apply
applied [rev_id: 2]
cumulus@sw1:mgmt:~$ ip route show vrf mgmt
default via 10.231.80.1 dev eth0 proto kernel
unreachable default metric 4278198272
10.231.80.0/22 dev eth0 proto kernel scope link src 10.231.80.206
127.0.0.0/8 dev mgmt proto kernel scope link src 127.0.0.1
```

14. Create a new user and add this user to the `sudo` group. This user only becomes effective after the console/SSH session is restarted.

```
sudo adduser --ingroup netedit admin
```

```
cumulus@sw1:mgmt:~$ sudo adduser --ingroup netedit admin
[sudo] password for cumulus:
Adding user 'admin' ...
Adding new user 'admin' (1001) with group `netedit' ...
Creating home directory '/home/admin' ...
Copying files from '/etc/skel' ...
New password:
Retype new password:
passwd: password updated successfully
Changing the user information for admin
Enter the new value, or press ENTER for the default
Full Name []:
Room Number []:
Work Phone []:
Home Phone []:
Other []:
Is the information correct? [Y/n] y

cumulus@sw1:mgmt:~$ sudo adduser admin sudo
[sudo] password for cumulus:
Adding user `admin' to group `sudo' ...
Adding user admin to group sudo
Done.
cumulus@sw1:mgmt:~$ exit
logout
Connection to 10.233.204.71 closed.

[admin@cycrh6svl01 ~]$ ssh admin@10.233.204.71
admin@10.233.204.71's password:
Linux sw1 4.19.0-cl-1-amd64 #1 SMP Cumulus 4.19.206-1+cl4.4.1u1
(2021-09-09) x86_64
Welcome to NVIDIA Cumulus (R) Linux (R)

For support and online technical documentation, visit
http://www.cumulusnetworks.com/support

The registered trademark Linux (R) is used pursuant to a sublicense
from LMI, the exclusive licensee of Linus Torvalds, owner of the
mark on a world-wide basis.
admin@sw1:mgmt:~$
```

15. Add additional user groups for the admin user to access `nv` commands:

```
cumulus@sw1:mgmt:~$ sudo adduser admin nvshow
     [sudo] password for cumulus:
     Adding user `admin' to group `nvshow' ...
     Adding user admin to group nvshow
     Done.
```

See NVIDIA User Accounts for more information.

Cumulus Linux 5.4.0 to Cumulus Linux 5.11.0

1. Connect the cluster switch to the management network.
2. Use the ping command to verify connectivity to the server hosting the Cumulus Linux and the RCF.
3. Display the cluster ports on each node that are connected to the cluster switches:

   ```
   network device-discovery show
   ```

4. Check the administrative and operational status of each cluster port.
   a. Verify that all the cluster ports are up with a healthy status:

      ```
      network port show -role cluster
      ```

   b. Verify that all the cluster interfaces (LIFs) are on the home port:

      ```
      network interface show -role cluster
      ```

   c. Verify that the cluster displays information for both cluster switches:

      ```
      system cluster-switch show -is-monitoring-enabled-operational true
      ```

5. Disable auto-revert on the cluster LIFs. The cluster LIFs fail over to the partner cluster switch and remain there as you perform the upgrade procedure on the targeted switch:

   ```
   network interface modify -vserver Cluster -lif * -auto-revert false
   ```

6. Check the current Cumulus Linux version and connected ports:

```
cumulus@sw1:mgmt:~$ nv show system
                    operational          applied
------------------- -------------------- -----------------
hostname            cumulus              cumulus
build               Cumulus Linux 5.4.0
uptime              6 days, 8:37:36
timezone            Etc/UTC

cumulus@sw1:mgmt:~$ nv show interface
Interface     MTU   Speed State Remote Host         Remote Port-
Type      Summary
------------ ----- ----- ----- ------------------- ------------
--------- -------------
+ cluster_isl 9216  200G  up
bond
+ eth0        1500  100M  up    mgmt-sw1            Eth105/1/14
eth       IP Address: 10.231.80 206/22
  eth0
IP Address: fd20:8b1e:f6ff:fe31:4a0e/64
+ lo          65536       up
loopback  IP Address: 127.0.0.1/8
  lo
IP Address: ::1/128
+ swp1s0      9216 10G    up cluster01                e0b
swp
.
.
.
+ swp15      9216 100G    up sw2                      swp15
swp
+ swp16      9216 100G    up sw2                      swp16
swp
```

7. Download the Cumulux Linux 5.11.0 image:

```
cumulus@sw1:mgmt:~$ sudo onie-install -a -i http://<ip-to-webserver>/path/to/cumulus-linux-5.11.0-mlx-amd64.bin
[sudo] password for cumulus:
Fetching installer: http://<ip-to-webserver>/path/to/cumulus-linux-5.11.0-mlx-amd64.bin
Downloading URL: http://<ip-to-webserver>/path/to/cumulus-linux-5.11.0-mlx-amd64.bin
# 100.0%
Success: HTTP download complete.
EFI variables are not supported on this system
Warning: SecureBoot is not available.
Image is signed.
.
.
.
Staging installer image...done.
WARNING:
WARNING: Activating staged installer requested.
WARNING: This action will wipe out all system data.
WARNING: Make sure to back up your data.
WARNING:
Are you sure (y/N)? y
Activating staged installer...done.
Reboot required to take effect.
```

8. Reboot the switch:

```
cumulus@sw1:mgmt:~$ sudo reboot
```

9. Change the password:

```
cumulus login: cumulus
Password:
You are required to change your password immediately (administrator
enforced)
Changing password for cumulus.
Current password: cumulus
New password: <new_password>
Retype new password: <new_password>
Linux cumulus 5.11.0-cl-1-amd64 #1 SMP Debian 5.10.162-1+cl5.4.0u1
(2023-01-20) x86_64

Welcome to NVIDIA Cumulus (R) Linux (R)

ZTP in progress. To disable, do 'ztp -d'
```

10. Check the Cumulus Linux version: `nv show system`

```
cumulus@cumulus:mgmt:~$ nv show system
operational    applied
-------------- ----------------
hostname       cumulus cumulus
build          Cumulus Linux 5.11.0
uptime         14:07:08
timezone       Etc/UTC
```

11. Change the hostname:

```
cumulus@cumulus:mgmt:~$ nv set system hostname sw1
cumulus@cumulus:mgmt:~$ nv config apply
Warning: The following files have been changed since the last save,
and they WILL be overwritten.
- /etc/nsswitch.conf
- /etc/synced/synced.conf
.
.
```

12. Log out and log in to the switch again to see the updated switch name at the prompt:

```
cumulus@cumulus:mgmt:~$ exit
logout

Debian GNU/Linux 10 cumulus ttyS0

cumulus login: cumulus
Password:
Last login: Tue Dec 15 21:43:13 UTC 2020 on ttyS0
Linux cumulus 5.11.0-cl-1-amd64 #1 SMP Debian 5.10.162-1+cl5.4.0u1
(2023-01-20) x86_64

Welcome to NVIDIA Cumulus (R) Linux (R)


ZTP in progress. To disable, do 'ztp -d'

cumulus@sw1:mgmt:~$
```

13. Set the IP address:

```
cumulus@sw1:mgmt:~$ nv unset interface eth0 ip address dhcp
cumulus@sw1:mgmt:~$ nv set interface eth0 ip address
10.231.80.206/22
cumulus@sw1:mgmt:~$ nv set interface eth0 ip gateway 10.231.80.1
cumulus@sw1:mgmt:~$ nv config apply
applied [rev_id: 2]
cumulus@sw1:mgmt:~$ ip route show vrf mgmt
default via 10.231.80.1 dev eth0 proto kernel
unreachable default metric 4278198272
10.231.80.0/22 dev eth0 proto kernel scope link src 10.231.80.206
127.0.0.0/8 dev mgmt proto kernel scope link src 127.0.0.1
```

What's next?

After you've upgraded your Cumulus Linux version, you can install or upgrade the RCF script.

Install or upgrade the Reference Configuration File (RCF) script

Follow this procedure to install or upgrade the RCF script.

Before you begin

Before installing or upgrading the RCF script, make sure that the following are available on the switch:

- Cumulus Linux is installed. See the Hardware Universe for supported versions.
- IP address, subnet mask, and default gateway defined via DHCP or manually configured.

You must specify a user in the RCF (in addition to the admin user) to be used specifically for log collection.

Customer configurations

The following reference configuration categories are available:

Cluster	On ports configured for 4x10GbE breakout, one port is configured for 4x25GbE breakout and the other ports are configured for 40/100GbE. Supports shared cluster/HA traffic on ports for nodes that use shared cluster/HA ports. See the platform table in the Knowledge Base article What AFF, ASA, and FAS platforms use shared Cluster and HA Ethernet ports?. All ports can be used as dedicated cluster ports too.
Storage	All ports configured for 100GbE NVMe storage connections.

Current RCF script versions

There are two RCF scripts available for Cluster and Storage applications. Download RCFs from NVIDIA SN2100 software download page. The procedure for each is the same.

- Cluster: **MSN2100-RCF-v1.*x*-Cluster-HA-Breakout-LLDP**
- Storage: **MSN2100-RCF-v1.*x*-Storage**

About the examples

The following example procedure shows how to download and apply the RCF script for Cluster switches.

Example command output uses switch management IP address 10.233.204.71, netmask 255.255.254.0 and default gateway 10.233.204.1.

Example 4. Steps

Cumulus Linux 4.4.3

1. Connect the cluster switch to the management network.
2. Use the `ping` command to verify connectivity to the server hosting the Cumulus Linux and the RCF.
3. Display the cluster ports on each node that are connected to the cluster switches:

   ```
   network device-discovery show
   ```

4. Check the administrative and operational status of each cluster port.
   a. Verify that all the cluster ports are up with a healthy status:

      ```
      network port show -role cluster
      ```

   b. Verify that all the cluster interfaces (LIFs) are on the home port:

      ```
      network interface show -role cluster
      ```

   c. Verify that the cluster displays information for both cluster switches:

      ```
      system cluster-switch show -is-monitoring-enabled-operational true
      ```

5. Disable auto-revert on the cluster LIFs. The cluster LIFs fail over to the partner cluster switch and remain there as you perform the upgrade procedure on the targeted switch:

   ```
   network interface modify -vserver Cluster -lif * -auto-revert false
   ```

   Note the following:
   - If you are upgrading your RCF, you must disable auto-revert for this step.
   - If you have just upgraded your Cumulus Linux version, you don't need to disable auto-revert for this step because it's already disabled.

6. Display the available interfaces on the SN2100 switch:

```
admin@sw1:mgmt:~$ net show interface all

State  Name   Spd  MTU    Mode          LLDP                Summary
-----  -----  ---  -----  ------------  ------------------
--------------
...
...
ADMDN  swp1   N/A  9216   NotConfigured
ADMDN  swp2   N/A  9216   NotConfigured
ADMDN  swp3   N/A  9216   NotConfigured
ADMDN  swp4   N/A  9216   NotConfigured
ADMDN  swp5   N/A  9216   NotConfigured
ADMDN  swp6   N/A  9216   NotConfigured
ADMDN  swp7   N/A  9216   NotConfigured
ADMDN  swp8   N/A  9216   NotConfigured
ADMDN  swp9   N/A  9216   NotConfigured
ADMDN  swp10  N/A  9216   NotConfigured
ADMDN  swp11  N/A  9216   NotConfigured
ADMDN  swp12  N/A  9216   NotConfigured
ADMDN  swp13  N/A  9216   NotConfigured
ADMDN  swp14  N/A  9216   NotConfigured
ADMDN  swp15  N/A  9216   NotConfigured
ADMDN  swp16  N/A  9216   NotConfigured
```

7. Copy the RCF python script to the switch.

```
cumulus@cumulus:mgmt:~$ cd /tmp
cumulus@cumulus:mgmt:/tmp$ scp <user>@<host:/<path>/MSN2100-RCF-v1.x
-Cluster-HA-Breakout-LLDP .
ssologin@10.233.204.71's password:
MSN2100-RCF-v1.x-Cluster-HA-Breakout-LLDP         100% 8607
111.2KB/s         00:00
```

While `scp` is used in the example, you can use your preferred method of file transfer, for example SFTP, HTTPS, or FTP.

8. Apply the RCF python script **MSN2100-RCF-v1.*x*-Cluster-HA-Breakout-LLDP**.

```
cumulus@cumulus:mgmt:/tmp$ sudo python3 MSN2100-RCF-v1.x-Cluster-HA
-Breakout-LLDP
[sudo] password for cumulus:
...
Step 1: Creating the banner file
Step 2: Registering banner message
Step 3: Updating the MOTD file
Step 4: Ensuring passwordless use of cl-support command by admin
Step 5: Disabling apt-get
Step 6: Creating the interfaces
Step 7: Adding the interface config
Step 8: Disabling cdp
Step 9: Adding the lldp config
Step 10: Adding the RoCE base config
Step 11: Modifying RoCE Config
Step 12: Configure SNMP
Step 13: Reboot the switch
```

The RCF script completes the steps listed in the example above.

> In step 3 **Updating the MOTD file** above, the command `cat /etc/motd` is run. This allows you to verify the RCF filename, RCF version, ports to use, and other important information in the RCF banner.

> For any RCF python script issues that cannot be corrected, contact NetApp Support for assistance.

9. Reapply any previous customizations to the switch configuration. Refer to Review cabling and configuration considerations for details of any further changes required.
10. Verify the configuration after the reboot:

```
admin@sw1:mgmt:~$ net show interface all

State  Name      Spd   MTU    Mode       LLDP               Summary
-----  --------- ----  -----  ---------- ------------------ --------
...
...
DN     swp1s0    N/A   9216   Trunk/L2                      Master:
bridge(UP)
DN     swp1s1    N/A   9216   Trunk/L2                      Master:
bridge(UP)
DN     swp1s2    N/A   9216   Trunk/L2                      Master:
bridge(UP)
DN     swp1s3    N/A   9216   Trunk/L2                      Master:
bridge(UP)
```

```
DN     swp2s0    N/A   9216   Trunk/L2                    Master:
bridge(UP)
DN     swp2s1    N/A   9216   Trunk/L2                    Master:
bridge(UP)
DN     swp2s2    N/A   9216   Trunk/L2                    Master:
bridge(UP)
DN     swp2s3    N/A   9216   Trunk/L2                    Master:
bridge(UP)
UP     swp3      100G  9216   Trunk/L2                    Master:
bridge(UP)
UP     swp4      100G  9216   Trunk/L2                    Master:
bridge(UP)
DN     swp5      N/A   9216   Trunk/L2                    Master:
bridge(UP)
DN     swp6      N/A   9216   Trunk/L2                    Master:
bridge(UP)
DN     swp7      N/A   9216   Trunk/L2                    Master:
bridge(UP)
DN     swp8      N/A   9216   Trunk/L2                    Master:
bridge(UP)
DN     swp9      N/A   9216   Trunk/L2                    Master:
bridge(UP)
DN     swp10     N/A   9216   Trunk/L2                    Master:
bridge(UP)
DN     swp11     N/A   9216   Trunk/L2                    Master:
bridge(UP)
DN     swp12     N/A   9216   Trunk/L2                    Master:
bridge(UP)
DN     swp13     N/A   9216   Trunk/L2                    Master:
bridge(UP)
DN     swp14     N/A   9216   Trunk/L2                    Master:
bridge(UP)
UP     swp15     N/A   9216   BondMember                  Master:
bond_15_16(UP)
UP     swp16     N/A   9216   BondMember                  Master:
bond_15_16(UP)
...
...

admin@sw1:mgmt:~$ net show roce config
RoCE mode.......... lossless
Congestion Control:
  Enabled SPs.... 0 2 5
  Mode........... ECN
  Min Threshold.. 150 KB
  Max Threshold.. 1500 KB
```

```
PFC:
  Status......... enabled
  Enabled SPs.... 2 5
  Interfaces......... swp10-16,swp1s0-3,swp2s0-3,swp3-9

DSCP                     802.1p  switch-priority
-----------------------  ------  ---------------
0 1 2 3 4 5 6 7               0                0
8 9 10 11 12 13 14 15         1                1
16 17 18 19 20 21 22 23       2                2
24 25 26 27 28 29 30 31       3                3
32 33 34 35 36 37 38 39       4                4
40 41 42 43 44 45 46 47       5                5
48 49 50 51 52 53 54 55       6                6
56 57 58 59 60 61 62 63       7                7

switch-priority  TC  ETS
---------------  --  --------
0 1 3 4 6 7       0  DWRR 28%
2                 2  DWRR 28%
5                 5  DWRR 43%
```

11. Verify information for the transceiver in the interface:

```
admin@sw1:mgmt:~$ net show interface pluggables
Interface  Identifier     Vendor Name  Vendor PN        Vendor SN
    Vendor Rev
---------  -------------  -----------  ---------------
--------------  ----------
swp3       0x11 (QSFP28)  Amphenol     112-00574
APF20379253516  B0
swp4       0x11 (QSFP28)  AVAGO        332-00440        AF1815GU05Z
    A0
swp15      0x11 (QSFP28)  Amphenol     112-00573
APF21109348001  B0
swp16      0x11 (QSFP28)  Amphenol     112-00573
APF21109347895  B0
```

12. Verify that the nodes each have a connection to each switch:

```
admin@sw1:mgmt:~$ net show lldp

LocalPort  Speed  Mode        RemoteHost              RemotePort
---------  -----  ----------  ----------------------  -----------
swp3       100G   Trunk/L2    sw1                     e3a
swp4       100G   Trunk/L2    sw2                     e3b
swp15      100G   BondMember  sw13                    swp15
swp16      100G   BondMember  sw14                    swp16
```

13. Verify the health of cluster ports on the cluster.

    a. Verify that cluster ports are up and healthy across all nodes in the cluster:

```
cluster1::*> network port show -role cluster

Node: node1

Ignore
                                                  Speed(Mbps)
Health   Health
Port      IPspace      Broadcast Domain Link MTU  Admin/Oper
Status   Status
--------- ------------ ---------------- ---- ---- -----------
-------- ------
e3a       Cluster      Cluster          up   9000  auto/10000
healthy  false
e3b       Cluster      Cluster          up   9000  auto/10000
healthy  false

Node: node2

Ignore
                                                  Speed(Mbps)
Health   Health
Port      IPspace      Broadcast Domain Link MTU  Admin/Oper
Status   Status
--------- ------------ ---------------- ---- ---- -----------
-------- ------
e3a       Cluster      Cluster          up   9000  auto/10000
healthy  false
e3b       Cluster      Cluster          up   9000  auto/10000
healthy  false
```

    b. Verify the switch health from the cluster (this might not show switch sw2, since LIFs are not homed on e0d).

```
cluster1::*> network device-discovery show -protocol lldp
Node/       Local  Discovered
Protocol    Port   Device (LLDP: ChassisID)  Interface Platform
----------- ------ ------------------------- --------- ----------
node1/lldp
            e3a    sw1 (b8:ce:f6:19:1a:7e)   swp3      -
            e3b    sw2 (b8:ce:f6:19:1b:96)   swp3      -

node2/lldp
            e3a    sw1 (b8:ce:f6:19:1a:7e)   swp4      -
            e3b    sw2 (b8:ce:f6:19:1b:96)   swp4      -


cluster1::*> system switch ethernet show -is-monitoring-enabled
-operational true
Switch                      Type               Address
Model
--------------------------- ------------------ ----------------
-----
sw1                         cluster-network    10.233.205.90
MSN2100-CB2RC
     Serial Number: MNXXXXXXGD
      Is Monitored: true
            Reason: None
  Software Version: Cumulus Linux version 4.4.3 running on
Mellanox
                    Technologies Ltd. MSN2100
    Version Source: LLDP

sw2                         cluster-network    10.233.205.91
MSN2100-CB2RC
     Serial Number: MNCXXXXXXGS
      Is Monitored: true
            Reason: None
  Software Version: Cumulus Linux version 4.4.3 running on
Mellanox
                    Technologies Ltd. MSN2100
    Version Source: LLDP
```

14. Verify that the cluster is healthy:

    ```
    cluster show
    ```

15. Repeat steps 1 to 14 on the second switch.
16. Enable auto-revert on the cluster LIFs.

```
network interface modify -vserver Cluster -lif * -auto-revert true
```

Cumulus Linux 5.4.0

1. Connect the cluster switch to the management network.
2. Use the `ping` command to verify connectivity to the server hosting the Cumulus Linux and the RCF.
3. Display the cluster ports on each node that are connected to the cluster switches:

   ```
   network device-discovery show
   ```

4. Check the administrative and operational status of each cluster port.
   a. Verify that all the cluster ports are up with a healthy status:

      ```
      network port show -role cluster
      ```

   b. Verify that all the cluster interfaces (LIFs) are on the home port:

      ```
      network interface show -role cluster
      ```

   c. Verify that the cluster displays information for both cluster switches:

      ```
      system cluster-switch show -is-monitoring-enabled-operational true
      ```

5. Disable auto-revert on the cluster LIFs. The cluster LIFs fail over to the partner cluster switch and remain there as you perform the upgrade procedure on the targeted switch:

   ```
   network interface modify -vserver Cluster -lif * -auto-revert false
   ```

   Note the following:
   - If you are upgrading your RCF, you must disable auto-revert for this step.
   - If you have just upgraded your Cumulus Linux version, you don’t need to disable auto-revert for this step because it’s already disabled.

6. Display the available interfaces on the SN2100 switch:

```
admin@sw1:mgmt:~$ nv show interface
Interface     MTU   Speed State Remote Host         Remote Port-
Type      Summary
------------ ----- ----- ----- ------------------ ------------
--------- -------------
+ cluster_isl 9216  200G  up
bond
+ eth0        1500  100M  up    mgmt-sw1           Eth105/1/14
eth       IP Address: 10.231.80 206/22
  eth0
IP Address: fd20:8b1e:f6ff:fe31:4a0e/64
+ lo          65536       up
loopback  IP Address: 127.0.0.1/8
  lo
IP Address: ::1/128
+ swp1s0      9216 10G    up cluster01               e0b
swp
.
.
.
+ swp15      9216 100G    up sw2                     swp15
swp
+ swp16      9216 100G    up sw2                     swp16
swp
```

7. Copy the RCF python script to the switch.

```
cumulus@cumulus:mgmt:~$ cd /tmp
cumulus@cumulus:mgmt:/tmp$ scp <user>@<host:/<path>/MSN2100-RCF-v1.x
-Cluster-HA-Breakout-LLDP .
ssologin@10.233.204.71's password:
MSN2100-RCF-v1.x-Cluster-HA-Breakout-LLDP          100% 8607
111.2KB/s         00:00
```

> While `scp` is used in the example, you can use your preferred method of file transfer, for example SFTP, HTTPS, or FTP.

8. Apply the RCF python script **MSN2100-RCF-v1.*x*-Cluster-HA-Breakout-LLDP**.

```
cumulus@cumulus:mgmt:/tmp$ sudo python3 MSN2100-RCF-v1.x-Cluster-HA
-Breakout-LLDP
[sudo] password for cumulus:
.
.
Step 1: Creating the banner file
Step 2: Registering banner message
Step 3: Updating the MOTD file
Step 4: Ensuring passwordless use of cl-support command by admin
Step 5: Disabling apt-get
Step 6: Creating the interfaces
Step 7: Adding the interface config
Step 8: Disabling cdp
Step 9: Adding the lldp config
Step 10: Adding the RoCE base config
Step 11: Modifying RoCE Config
Step 12: Configure SNMP
Step 13: Reboot the switch
```

The RCF script completes the steps listed in the example above.

> In step 3 **Updating the MOTD file** above, the command `cat /etc/issue.net` is run. This allows you to verify the RCF filename, RCF version, ports to use, and other important information in the RCF banner.

For example:

```
admin@sw1:mgmt:~$ cat /etc/issue.net
**********************************************************************
**********
*
* NetApp Reference Configuration File (RCF)
* Switch       : Mellanox MSN2100
* Filename     : MSN2100-RCF-1._x_-Cluster-HA-Breakout-LLDP
* Release Date : 13-02-2023
* Version      : 1._x_-Cluster-HA-Breakout-LLDP
*
* Port Usage:
* Port 1      : 4x10G Breakout mode for Cluster+HA Ports, swp1s0-3
* Port 2      : 4x25G Breakout mode for Cluster+HA Ports, swp2s0-3
* Ports 3-14  : 40/100G for Cluster+HA Ports, swp3-14
* Ports 15-16 : 100G Cluster ISL Ports, swp15-16
*
* NOTE:
*   RCF manually sets swp1s0-3 link speed to 10000 and
*   auto-negotiation to off for Intel 10G
*   RCF manually sets swp2s0-3 link speed to 25000 and
*   auto-negotiation to off for Chelsio 25G
*
*
* IMPORTANT: Perform the following steps to ensure proper RCF
installation:
* - Copy the RCF file to /tmp
* - Ensure the file has execute permission
* - From /tmp run the file as sudo python3 <filename>
*
**********************************************************************
**********
```

For any RCF python script issues that cannot be corrected, contact NetApp Support for assistance.

9. Reapply any previous customizations to the switch configuration. Refer to Review cabling and configuration considerations for details of any further changes required.
10. Verify the configuration after the reboot:

```
admin@sw1:mgmt:~$ nv show interface
Interface     MTU   Speed State Remote Host         Remote Port-
Type      Summary
------------- ----- ----- ----- ------------------- ------------
--------- -------------
```

```
+ cluster_isl 9216  200G  up
bond
+ eth0        1500  100M  up    mgmt-sw1            Eth105/1/14
eth       IP Address: 10.231.80 206/22
  eth0
IP Address: fd20:8b1e:f6ff:fe31:4a0e/64
+ lo          65536       up
loopback  IP Address: 127.0.0.1/8
  lo
IP Address: ::1/128
+ swp1s0      9216 10G    up cluster01               e0b
swp
.
.
.
+ swp15      9216 100G    up sw2                     swp15
swp
+ swp16      9216 100G    up sw2                     swp16
swp

admin@sw1:mgmt:~$ nv show qos roce
                   operational  applied   description
-----------------  -----------  ---------
----------------------------------------
enable             on                     Turn feature 'on' or
'off'. This feature is disabled by default.
mode               lossless     lossless  Roce Mode
congestion-control
  congestion-mode   ECN,RED                Congestion config mode
  enabled-tc        0,2,5                  Congestion config enabled
Traffic Class
  max-threshold     195.31 KB              Congestion config max-
threshold
  min-threshold     39.06 KB               Congestion config min-
threshold
  probability       100
lldp-app-tlv
  priority          3                      switch-priority of roce
  protocol-id       4791                   L4 port number
  selector          UDP                    L4 protocol
pfc
  pfc-priority      2, 5                   switch-prio on which PFC
is enabled
  rx-enabled        enabled                PFC Rx Enabled status
  tx-enabled        enabled                PFC Tx Enabled status
trust
```

```
  trust-mode        pcp,dscp              Trust Setting on the port
for packet classification

RoCE PCP/DSCP->SP mapping configurations
========================================
        pcp  dscp                     switch-prio
    --  ---  -----------------------  -----------
    0   0    0,1,2,3,4,5,6,7          0
    1   1    8,9,10,11,12,13,14,15    1
    2   2    16,17,18,19,20,21,22,23  2
    3   3    24,25,26,27,28,29,30,31  3
    4   4    32,33,34,35,36,37,38,39  4
    5   5    40,41,42,43,44,45,46,47  5
    6   6    48,49,50,51,52,53,54,55  6
    7   7    56,57,58,59,60,61,62,63  7

RoCE SP->TC mapping and ETS configurations
==========================================
        switch-prio  traffic-class  scheduler-weight
    --  -----------  -------------  ----------------
    0   0            0              DWRR-28%
    1   1            0              DWRR-28%
    2   2            2              DWRR-28%
    3   3            0              DWRR-28%
    4   4            0              DWRR-28%
    5   5            5              DWRR-43%
    6   6            0              DWRR-28%
    7   7            0              DWRR-28%

RoCE pool config
================
        name                    mode     size  switch-priorities
traffic-class
    --  ----------------------  -------  ----  -----------------
-------------
    0   lossy-default-ingress   Dynamic  50%   0,1,3,4,6,7        -
    1   roce-reserved-ingress   Dynamic  50%   2,5                -
    2   lossy-default-egress    Dynamic  50%   -                  0
    3   roce-reserved-egress    Dynamic  inf   -                  2,5

Exception List
==============
        description
    --
-------------------------------------------------------------------
---…
```

```
    1   RoCE PFC Priority Mismatch.Expected pfc-priority: 3.
    2   Congestion Config TC Mismatch.Expected enabled-tc: 0,3.
    3   Congestion Config mode Mismatch.Expected congestion-mode:
ECN.
    4   Congestion Config min-threshold Mismatch.Expected min-
threshold: 150000.
    5   Congestion Config max-threshold Mismatch.Expected max-
threshold:
        1500000.
    6   Scheduler config mismatch for traffic-class mapped to
switch-prio0.
        Expected scheduler-weight: DWRR-50%.
    7   Scheduler config mismatch for traffic-class mapped to
switch-prio1.
        Expected scheduler-weight: DWRR-50%.
    8   Scheduler config mismatch for traffic-class mapped to
switch-prio2.
        Expected scheduler-weight: DWRR-50%.
    9   Scheduler config mismatch for traffic-class mapped to
switch-prio3.
        Expected scheduler-weight: DWRR-50%.
    10  Scheduler config mismatch for traffic-class mapped to
switch-prio4.
        Expected scheduler-weight: DWRR-50%.
    11  Scheduler config mismatch for traffic-class mapped to
switch-prio5.
        Expected scheduler-weight: DWRR-50%.
    12  Scheduler config mismatch for traffic-class mapped to
switch-prio6.
        Expected scheduler-weight: strict-priority.
    13  Scheduler config mismatch for traffic-class mapped to
switch-prio7.
        Expected scheduler-weight: DWRR-50%.
    14  Invalid reserved config for ePort.TC[2].Expected 0 Got 1024
    15  Invalid reserved config for ePort.TC[5].Expected 0 Got 1024
    16  Invalid traffic-class mapping for switch-priority 2.Expected
0 Got 2
    17  Invalid traffic-class mapping for switch-priority 3.Expected
3 Got 0
    18  Invalid traffic-class mapping for switch-priority 5.Expected
0 Got 5
    19  Invalid traffic-class mapping for switch-priority 6.Expected
6 Got 0
Incomplete Command: set interface swp3-16 link fast-linkupp3-16 link
fast-linkup
Incomplete Command: set interface swp3-16 link fast-linkupp3-16 link
```

```
fast-linkup
Incomplete Command: set interface swp3-16 link fast-linkupp3-16 link
fast-linkup
```

The exceptions listed don't affect performance and can be safely ignored.

11. Verify information for the transceiver in the interface:

```
admin@sw1:mgmt:~$ nv show interface --view=pluggables
Interface  Identifier     Vendor Name  Vendor PN        Vendor
SN       Vendor Rev
---------  -------------  -----------  ---------------
--------------  ----------
swp1s0     0x00 None
swp1s1     0x00 None
swp1s2     0x00 None
swp1s3     0x00 None
swp2s0     0x11 (QSFP28)  CISCO-LEONI  L45593-D278-D20
LCC2321GTTJ     00
swp2s1     0x11 (QSFP28)  CISCO-LEONI  L45593-D278-D20
LCC2321GTTJ     00
swp2s2     0x11 (QSFP28)  CISCO-LEONI  L45593-D278-D20
LCC2321GTTJ     00
swp2s3     0x11 (QSFP28)  CISCO-LEONI  L45593-D278-D20
LCC2321GTTJ     00
swp3       0x00 None
swp4       0x00 None
swp5       0x00 None
swp6       0x00 None
.
.
.
swp15      0x11 (QSFP28)  Amphenol     112-00595
APF20279210117  B0
swp16      0x11 (QSFP28)  Amphenol     112-00595
APF20279210166  B0
```

12. Verify that the nodes each have a connection to each switch:

```
admin@sw1:mgmt:~$ nv show interface --view=lldp

LocalPort  Speed  Mode        RemoteHost                RemotePort
---------  -----  ----------  ------------------------  -----------
eth0       100M   Mgmt        mgmt-sw1                  Eth110/1/29
swp2s1     25G    Trunk/L2    node1                     e0a
swp15      100G   BondMember  sw2                       swp15
swp16      100G   BondMember  sw2                       swp16
```

13. Verify the health of cluster ports on the cluster.
    a. Verify that cluster ports are up and healthy across all nodes in the cluster:

```
cluster1::*> network port show -role cluster

Node: node1

Ignore
                                                  Speed(Mbps)
Health   Health
Port      IPspace      Broadcast Domain Link MTU  Admin/Oper
Status   Status
--------- ------------ ---------------- ---- ---- -----------
-------- ------
e3a       Cluster      Cluster          up   9000  auto/10000
healthy  false
e3b       Cluster      Cluster          up   9000  auto/10000
healthy  false

Node: node2

Ignore
                                                  Speed(Mbps)
Health   Health
Port      IPspace      Broadcast Domain Link MTU  Admin/Oper
Status   Status
--------- ------------ ---------------- ---- ---- -----------
-------- ------
e3a       Cluster      Cluster          up   9000  auto/10000
healthy  false
e3b       Cluster      Cluster          up   9000  auto/10000
healthy  false
```

    b. Verify the switch health from the cluster (this might not show switch sw2, since LIFs are not homed on e0d).

```
cluster1::*> network device-discovery show -protocol lldp
Node/       Local  Discovered
Protocol    Port   Device (LLDP: ChassisID)  Interface Platform
----------- ------ ------------------------- --------- ----------
node1/lldp
            e3a    sw1 (b8:ce:f6:19:1a:7e)   swp3      -
            e3b    sw2 (b8:ce:f6:19:1b:96)   swp3      -

node2/lldp
            e3a    sw1 (b8:ce:f6:19:1a:7e)   swp4      -
            e3b    sw2 (b8:ce:f6:19:1b:96)   swp4      -


cluster1::*> system switch ethernet show -is-monitoring-enabled
-operational true
Switch                      Type               Address
Model
--------------------------- ------------------ ----------------
-----
sw1                         cluster-network    10.233.205.90
MSN2100-CB2RC
     Serial Number: MNXXXXXXGD
      Is Monitored: true
            Reason: None
  Software Version: Cumulus Linux version 5.4.0 running on
Mellanox
                    Technologies Ltd. MSN2100
    Version Source: LLDP

sw2                         cluster-network    10.233.205.91
MSN2100-CB2RC
     Serial Number: MNCXXXXXXGS
      Is Monitored: true
            Reason: None
  Software Version: Cumulus Linux version 5.4.0 running on
Mellanox
                    Technologies Ltd. MSN2100
    Version Source: LLDP
```

14. Verify that the cluster is healthy:

    ```
    cluster show
    ```

15. Repeat steps 1 to 14 on the second switch.
16. Enable auto-revert on the cluster LIFs.

```
network interface modify -vserver Cluster -lif * -auto-revert true
```

Cumulus Linux 5.11.0

1. Connect the cluster switch to the management network.
2. Use the `ping` command to verify connectivity to the server hosting the Cumulus Linux and the RCF.
3. Display the cluster ports on each node that are connected to the cluster switches:

   ```
   network device-discovery show
   ```

4. Check the administrative and operational status of each cluster port.
   a. Verify that all the cluster ports are up with a healthy status:

      ```
      network port show -role cluster
      ```

   b. Verify that all the cluster interfaces (LIFs) are on the home port:

      ```
      network interface show -role cluster
      ```

   c. Verify that the cluster displays information for both cluster switches:

      ```
      system cluster-switch show -is-monitoring-enabled-operational true
      ```

5. Disable auto-revert on the cluster LIFs. The cluster LIFs fail over to the partner cluster switch and remain there as you perform the upgrade procedure on the targeted switch:

   ```
   network interface modify -vserver Cluster -lif * -auto-revert false
   ```

   Note the following:
   - If you are upgrading your RCF, you must disable auto-revert for this step.
   - If you have just upgraded your Cumulus Linux version, you don’t need to disable auto-revert for this step because it’s already disabled.

6. Display the available interfaces on the SN2100 switch:

```
admin@sw1:mgmt:~$ nv show interface
Interface     MTU   Speed State Remote Host         Remote Port-
Type      Summary
------------ ----- ----- ----- ------------------ ------------
--------- -------------
+ cluster_isl 9216  200G  up
bond
+ eth0        1500  100M  up    mgmt-sw1           Eth105/1/14
eth       IP Address: 10.231.80 206/22
  eth0
IP Address: fd20:8b1e:f6ff:fe31:4a0e/64
+ lo          65536       up
loopback  IP Address: 127.0.0.1/8
  lo
IP Address: ::1/128
+ swp1s0      9216 10G    up cluster01               e0b
swp
.
.
.
+ swp15      9216 100G    up sw2                     swp15
swp
+ swp16      9216 100G    up sw2                     swp16
swp
```

7. Copy the RCF python script to the switch.

```
cumulus@cumulus:mgmt:~$ cd /tmp
cumulus@cumulus:mgmt:/tmp$ scp <user>@<host:/<path>/MSN2100-RCF-v1.x
-Cluster-HA-Breakout-LLDP .
ssologin@10.233.204.71's password:
MSN2100-RCF-v1.x-Cluster-HA-Breakout-LLDP          100% 8607
111.2KB/s         00:00
```

> Although `scp` is used in the example, you can use your preferred method of file transfer, for example SFTP, HTTPS, or FTP.

8. Apply the RCF python script **MSN2100-RCF-v1.*x*-Cluster-HA-Breakout-LLDP**.

```
cumulus@cumulus:mgmt:/tmp$ sudo python3 MSN2100-RCF-v1.x-Cluster-HA
-Breakout-LLDP
[sudo] password for cumulus:
.
.
Step 1: Creating the banner file
Step 2: Registering banner message
Step 3: Updating the MOTD file
Step 4: Ensuring passwordless use of cl-support command by admin
Step 5: Disabling apt-get
Step 6: Creating the interfaces
Step 7: Adding the interface config
Step 8: Disabling cdp
Step 9: Adding the lldp config
Step 10: Adding the RoCE base config
Step 11: Modifying RoCE Config
Step 12: Configure SNMP
Step 13: Reboot the switch
```

The RCF script completes the steps listed in the example above.

> In step 3 **Updating the MOTD file** above, the command `cat /etc/issue.net is run. This allows you to verify the RCF filename, RCF version, ports to use, and other important information in the RCF banner.

For example:

```
admin@sw1:mgmt:~$ cat /etc/issue.net
**********************************************************************
**********
*
* NetApp Reference Configuration File (RCF)
* Switch       : Mellanox MSN2100
* Filename     : MSN2100-RCF-1._x_-Cluster-HA-Breakout-LLDP
* Release Date : 13-02-2023
* Version      : 1._x_-Cluster-HA-Breakout-LLDP
*
* Port Usage:
* Port 1      : 4x10G Breakout mode for Cluster+HA Ports, swp1s0-3
* Port 2      : 4x25G Breakout mode for Cluster+HA Ports, swp2s0-3
* Ports 3-14  : 40/100G for Cluster+HA Ports, swp3-14
* Ports 15-16 : 100G Cluster ISL Ports, swp15-16
*
* NOTE:
*   RCF manually sets swp1s0-3 link speed to 10000 and
*   auto-negotiation to off for Intel 10G
*   RCF manually sets swp2s0-3 link speed to 25000 and
*   auto-negotiation to off for Chelsio 25G
*
*
* IMPORTANT: Perform the following steps to ensure proper RCF
installation:
* - Copy the RCF file to /tmp
* - Ensure the file has execute permission
* - From /tmp run the file as sudo python3 <filename>
*
**********************************************************************
**********
```

For any RCF python script issues that cannot be corrected, contact NetApp Support for assistance.

9. Reapply any previous customizations to the switch configuration. Refer to Review cabling and configuration considerations for details of any further changes required.
10. Verify the configuration after the reboot:

```
admin@sw1:mgmt:~$ nv show interface
Interface     MTU   Speed State Remote Host         Remote Port-
Type      Summary
------------- ----- ----- ----- ------------------- ------------
--------- -------------
```

```
+ cluster_isl 9216  200G  up
bond
+ eth0        1500  100M  up    mgmt-sw1            Eth105/1/14
eth       IP Address: 10.231.80 206/22
  eth0
IP Address: fd20:8b1e:f6ff:fe31:4a0e/64
+ lo          65536       up
loopback  IP Address: 127.0.0.1/8
  lo
IP Address: ::1/128
+ swp1s0      9216 10G    up cluster01               e0b
swp
.
.
.
+ swp15      9216 100G    up sw2                     swp15
swp
+ swp16      9216 100G    up sw2                     swp16
swp

admin@sw1:mgmt:~$ nv show qos roce
                   operational  applied   description
-----------------  -----------  ---------
----------------------------------------
enable             on                     Turn feature 'on' or
'off'. This feature is disabled by default.
mode               lossless     lossless  Roce Mode
congestion-control
  congestion-mode   ECN,RED                Congestion config mode
  enabled-tc        0,2,5                  Congestion config enabled
Traffic Class
  max-threshold     195.31 KB              Congestion config max-
threshold
  min-threshold     39.06 KB               Congestion config min-
threshold
  probability       100
lldp-app-tlv
  priority          3                      switch-priority of roce
  protocol-id       4791                   L4 port number
  selector          UDP                    L4 protocol
pfc
  pfc-priority      2, 5                   switch-prio on which PFC
is enabled
  rx-enabled        enabled                PFC Rx Enabled status
  tx-enabled        enabled                PFC Tx Enabled status
trust
```

```
  trust-mode        pcp,dscp              Trust Setting on the port
for packet classification

RoCE PCP/DSCP->SP mapping configurations
========================================
        pcp  dscp                     switch-prio
    --  ---  -----------------------  -----------
    0   0    0,1,2,3,4,5,6,7          0
    1   1    8,9,10,11,12,13,14,15    1
    2   2    16,17,18,19,20,21,22,23  2
    3   3    24,25,26,27,28,29,30,31  3
    4   4    32,33,34,35,36,37,38,39  4
    5   5    40,41,42,43,44,45,46,47  5
    6   6    48,49,50,51,52,53,54,55  6
    7   7    56,57,58,59,60,61,62,63  7

RoCE SP->TC mapping and ETS configurations
==========================================
        switch-prio  traffic-class  scheduler-weight
    --  -----------  -------------  ----------------
    0   0            0              DWRR-28%
    1   1            0              DWRR-28%
    2   2            2              DWRR-28%
    3   3            0              DWRR-28%
    4   4            0              DWRR-28%
    5   5            5              DWRR-43%
    6   6            0              DWRR-28%
    7   7            0              DWRR-28%

RoCE pool config
================
        name                    mode     size  switch-priorities
traffic-class
    --  ----------------------  -------  ----  -----------------
-------------
    0   lossy-default-ingress   Dynamic  50%   0,1,3,4,6,7        -
    1   roce-reserved-ingress   Dynamic  50%   2,5                -
    2   lossy-default-egress    Dynamic  50%   -                  0
    3   roce-reserved-egress    Dynamic  inf   -                  2,5

Exception List
==============
        description
    --
-------------------------------------------------------------------
---…
```

```
    1   RoCE PFC Priority Mismatch.Expected pfc-priority: 3.
    2   Congestion Config TC Mismatch.Expected enabled-tc: 0,3.
    3   Congestion Config mode Mismatch.Expected congestion-mode:
ECN.
    4   Congestion Config min-threshold Mismatch.Expected min-
threshold: 150000.
    5   Congestion Config max-threshold Mismatch.Expected max-
threshold:
        1500000.
    6   Scheduler config mismatch for traffic-class mapped to
switch-prio0.
        Expected scheduler-weight: DWRR-50%.
    7   Scheduler config mismatch for traffic-class mapped to
switch-prio1.
        Expected scheduler-weight: DWRR-50%.
    8   Scheduler config mismatch for traffic-class mapped to
switch-prio2.
        Expected scheduler-weight: DWRR-50%.
    9   Scheduler config mismatch for traffic-class mapped to
switch-prio3.
        Expected scheduler-weight: DWRR-50%.
    10  Scheduler config mismatch for traffic-class mapped to
switch-prio4.
        Expected scheduler-weight: DWRR-50%.
    11  Scheduler config mismatch for traffic-class mapped to
switch-prio5.
        Expected scheduler-weight: DWRR-50%.
    12  Scheduler config mismatch for traffic-class mapped to
switch-prio6.
        Expected scheduler-weight: strict-priority.
    13  Scheduler config mismatch for traffic-class mapped to
switch-prio7.
        Expected scheduler-weight: DWRR-50%.
    14  Invalid reserved config for ePort.TC[2].Expected 0 Got 1024
    15  Invalid reserved config for ePort.TC[5].Expected 0 Got 1024
    16  Invalid traffic-class mapping for switch-priority 2.Expected
0 Got 2
    17  Invalid traffic-class mapping for switch-priority 3.Expected
3 Got 0
    18  Invalid traffic-class mapping for switch-priority 5.Expected
0 Got 5
    19  Invalid traffic-class mapping for switch-priority 6.Expected
6 Got 0
Incomplete Command: set interface swp3-16 link fast-linkupp3-16 link
fast-linkup
Incomplete Command: set interface swp3-16 link fast-linkupp3-16 link
```

```
fast-linkup
Incomplete Command: set interface swp3-16 link fast-linkupp3-16 link
fast-linkup
```

The exceptions listed do not affect performance and can be safely ignored.

11. Verify information for the transceiver in the interface:

```
admin@sw1:mgmt:~$ nv show platform transceiver
Interface  Identifier     Vendor Name  Vendor PN        Vendor
SN       Vendor Rev
---------  -------------  -----------  ---------------
--------------  ----------
swp1s0     0x00 None
swp1s1     0x00 None
swp1s2     0x00 None
swp1s3     0x00 None
swp2s0     0x11 (QSFP28)  CISCO-LEONI  L45593-D278-D20
LCC2321GTTJ     00
swp2s1     0x11 (QSFP28)  CISCO-LEONI  L45593-D278-D20
LCC2321GTTJ     00
swp2s2     0x11 (QSFP28)  CISCO-LEONI  L45593-D278-D20
LCC2321GTTJ     00
swp2s3     0x11 (QSFP28)  CISCO-LEONI  L45593-D278-D20
LCC2321GTTJ     00
swp3       0x00 None
swp4       0x00 None
swp5       0x00 None
swp6       0x00 None
.
.
.
swp15      0x11 (QSFP28)  Amphenol     112-00595
APF20279210117  B0
swp16      0x11 (QSFP28)  Amphenol     112-00595
APF20279210166  B0
```

12. Verify that the nodes each have a connection to each switch:

```
admin@sw1:mgmt:~$ nv show interface lldp

LocalPort  Speed  Mode        RemoteHost                RemotePort
---------  -----  ----------  ------------------------  -----------
eth0       100M   Mgmt        mgmt-sw1                  Eth110/1/29
swp2s1     25G    Trunk/L2    node1                     e0a
swp15      100G   BondMember  sw2                       swp15
swp16      100G   BondMember  sw2                       swp16
```

13. Verify the health of cluster ports on the cluster.

    a. Verify that cluster ports are up and healthy across all nodes in the cluster:

```
cluster1::*> network port show -role cluster

Node: node1

Ignore
                                                  Speed(Mbps)
Health   Health
Port      IPspace      Broadcast Domain Link MTU  Admin/Oper
Status   Status
--------- ------------ ---------------- ---- ---- -----------
-------- ------
e3a       Cluster      Cluster          up   9000  auto/10000
healthy  false
e3b       Cluster      Cluster          up   9000  auto/10000
healthy  false

Node: node2

Ignore
                                                  Speed(Mbps)
Health   Health
Port      IPspace      Broadcast Domain Link MTU  Admin/Oper
Status   Status
--------- ------------ ---------------- ---- ---- -----------
-------- ------
e3a       Cluster      Cluster          up   9000  auto/10000
healthy  false
e3b       Cluster      Cluster          up   9000  auto/10000
healthy  false
```

    b. Verify the switch health from the cluster (this might not show switch sw2, since LIFs are not homed on e0d).

```
cluster1::*> network device-discovery show -protocol lldp
Node/       Local  Discovered
Protocol    Port   Device (LLDP: ChassisID)  Interface Platform
----------- ------ ------------------------- --------- ----------
node1/lldp
            e3a    sw1 (b8:ce:f6:19:1a:7e)   swp3      -
            e3b    sw2 (b8:ce:f6:19:1b:96)   swp3      -

node2/lldp
            e3a    sw1 (b8:ce:f6:19:1a:7e)   swp4      -
            e3b    sw2 (b8:ce:f6:19:1b:96)   swp4      -


cluster1::*> system switch ethernet show -is-monitoring-enabled
-operational true
Switch                      Type               Address
Model
--------------------------- ------------------ ----------------
-----
sw1                         cluster-network    10.233.205.90
MSN2100-CB2RC
     Serial Number: MNXXXXXXGD
      Is Monitored: true
            Reason: None
  Software Version: Cumulus Linux version 5.4.0 running on
Mellanox
                    Technologies Ltd. MSN2100
    Version Source: LLDP

sw2                         cluster-network    10.233.205.91
MSN2100-CB2RC
     Serial Number: MNCXXXXXXGS
      Is Monitored: true
            Reason: None
  Software Version: Cumulus Linux version 5.4.0 running on
Mellanox
                    Technologies Ltd. MSN2100
    Version Source: LLDP
```

14. Verify that the cluster is healthy:

    ```
    cluster show
    ```

15. Repeat steps 1 to 14 on the second switch.
16. Enable auto-revert on the cluster LIFs.

```
network interface modify -vserver Cluster -lif * -auto-revert true
```

What's next?

After you've installed the RCF, you can install the CSHM file.

Install the Ethernet Switch Health Monitor configuration file

To configure Ethernet switch health monitoring on NVIDIA Ethernet switches, follow this procedure.

These instructions apply if NVIDIA X190006-PE and X190006-PI switches are not detected properly, which can be confirmed by running `system switch ethernet show` and checking if **OTHER** is shown for your model. To identify your NVIDIA switch model, find the part-number with the command `nv show platform hardware` for NVIDIA CL 5.8 and earlier or `nv show platform` for later versions.

These steps are also recommended if you want health monitoring and log collection to work as intended when using NVIDIA CL 5.11.x with the following ONTAP releases. While health monitoring and log collection might still function without these steps, following them ensures everything operates correctly.

- 9.10.1P20, 9.11.1P18, 9.12.1P16, 9.13.1P8, 9.14.1, 9.15.1 and later patch releases

Before you begin

- Make sure that the ONTAP cluster is up and running.
- Enable SSH on the switch to use all of the features available in CSHM.
- Clear the `/mroot/etc/cshm_nod/nod_sign/` directory on all nodes:
  a. Enter the nodeshell:

     ```
     system node run -node <name>
     ```

  b. Change to advanced privilege:

     ```
     priv set advanced
     ```

  c. List the configuration files in the `/etc/cshm_nod/nod_sign` directory. If the directory exists and contains configuration files, it lists the file names.

     ```
     ls /etc/cshm_nod/nod_sign
     ```

  d. Delete all configuration files corresponding to your connected switch models.

     If you are unsure, remove all configuration files for the supported models listed above, then download and install the latest configuration files for those same models.

     ```
     rm /etc/cshm_nod/nod_sign/<filename>
     ```

  e. Confirm that the deleted configuration files are no longer in the directory:

     ```
     ls /etc/cshm_nod/nod_sign
     ```

Steps

1. Download the Ethernet switch health monitor configuration zip file based on the corresponding ONTAP release version. This file is available from the NVIDIA Ethernet switches page.
   a. On the NVIDIA SN2100 Software download page, select **Nvidia CSHM File**.
   b. On the Caution/Must read page, select the check box to agree.
   c. On the End User License Agreement page, select the check box to agree and click **Accept & Continue**.
   d. On the Nvidia CSHM File - Download page, select the applicable configuration file. The following files are available:

ONTAP 9.15.1 and later

- MSN2100-CB2FC-v1.4.zip
- MSN2100-CB2RC-v1.4.zip
- X190006-PE-v1.4.zip
- X190006-PI-v1.4.zip

ONTAP 9.11.1 through 9.14.1

- MSN2100-CB2FC_PRIOR_R9.15.1-v1.4.zip
- MSN2100-CB2RC_PRIOR_R9.15.1-v1.4.zip
- X190006-PE_PRIOR_9.15.1-v1.4.zip
- X190006-PI_PRIOR_9.15.1-v1.4.zip

2. Upload the applicable zip file to your internal web server.
3. Access the advanced mode setting from one of the ONTAP systems in the cluster.

```
set -privilege advanced
```

4. Run the switch health monitor configure command.

```
cluster1::> system switch ethernet configure-health-monitor
```

5. Verify that the command output ends with the following text for your ONTAP version:

ONTAP 9.15.1 and later

Ethernet switch health monitoring installed the configuration file.

ONTAP 9.11.1 through 9.14.1

SHM installed the configuration file.

ONTAP 9.10.1

CSHM downloaded package processed successfully.

If an error occurs, contact NetApp support.

6. Wait up to twice the Ethernet switch health monitor polling interval, found by running `system switch ethernet polling-interval show`, before completing the next step.
7. Run the command `system switch ethernet configure-health-monitor show` on the ONTAP system and make sure that the cluster switches are discovered with the monitored field set to **True** and the serial number field not showing **Unknown**.

```
cluster1::> system switch ethernet configure-health-monitor show
```

If your model is still showing **OTHER** after applying the configuration file, contact NetApp support.

See the system switch ethernet configure-health-monitor command for further details.

What's next?

After you've installed the CSHM file, you can configure switch health monitoring.

Reset the SN2100 cluster switch to factory defaults

To reset the SN2100 cluster switch to factory defaults:

- For Cumulus Linux 5.10 and earlier, you apply the Cumulus image.
- For Cumulus Linux 5.11 and later, you use the `nv action reset system factory-default` command.

About this task

- You must be connected to the switch using the serial console.
- You must have the root password for sudo access to the commands.

For more information about installing Cumulus Linux, see Software install workflow for NVIDIA SN2100 switches.

Example 5. Steps

Cumulus Linux 5.10 and earlier

1. From the Cumulus console, download and queue the switch software installation with the command `onie-install -a -i` followed by the file path to the switch software, for example:

```
cumulus@sw1:mgmt:~$ sudo onie-install -a -i http://<web-
server>/<path>/cumulus-linux-5.10.0-mlx-amd64.bin
```

2. The installer starts the download. Type **y** when prompted to confirm the installation when the image is downloaded and verified.
3. Reboot the switch to install the new software.

   `sudo reboot`

```
cumulus@sw1:mgmt:~$ sudo reboot
```

> The switch reboots and enters the switch software installation which takes some time. When the installation is complete, the switch reboots and remains at the `log-in` prompt.

Cumulus Linux 5.11 and later

1. To reset the switch to the factory defaults and remove all configuration, system files, and log files, run:

   `nv action reset system factory-default`

   For example:

```
cumulus@switch:~$ nv action reset system factory-default

This operation will reset the system configuration, delete the log
files and reboot the switch.
Type [y] continue.
Type [n] to abort.
Do you want to continue? [y/n] y
```

See the NVIDIA Factory Reset documentation for further details.

What's next

After you've reset your switches, you can reconfigure them as needed.

Migrate the switches

Migrate CN1610 cluster switches to NVIDIA SN2100 cluster switches

You can migrate NetApp CN1610 cluster switches for an ONTAP cluster to NVIDIA SN2100 cluster switches. This is a nondisruptive procedure.

Review requirements

You must be aware of certain configuration information, port connections and cabling requirements when you are replacing NetApp CN1610 cluster switches with NVIDIA SN2100 cluster switches. See Overview of installation and configuration for NVIDIA SN2100 switches.

Supported switches

The following cluster switches are supported:

- NetApp CN1610
- NVIDIA SN2100

For details of supported ports and their configurations, see the Hardware Universe.

Before you begin

Verify that you meet the following requirements for you configuration:

- The existing cluster is correctly set up and functioning.
- All cluster ports are in the **up** state to ensure nondisruptive operations.
- The NVIDIA SN2100 cluster switches are configured and operating under the correct version of Cumulus Linux installed with the reference configuration file (RCF) applied.
- The existing cluster network configuration has the following:
  - A redundant and fully functional NetApp cluster using CN1610 switches.
  - Management connectivity and console access to both the CN1610 switches and the new switches.
  - All cluster LIFs in the up state with the cluster LIFs on their home ports.
  - ISL ports enabled and cabled between the CN1610 switches and between the new switches.
- Some of the ports are configured on NVIDIA SN2100 switches to run at 40GbE or 100GbE.
- You have planned, migrated, and documented 40GbE and 100GbE connectivity from nodes to NVIDIA SN2100 cluster switches.

Migrate the switches

About the examples

The examples in this procedure use the following switch and node nomenclature:

- The existing CN1610 cluster switches are *c1* and *c2*.
- The new NVIDIA SN2100 cluster switches are *sw1* and *sw2*.
- The nodes are *node1* and *node2*.
- The cluster LIFs are *node1_clus1* and *node1_clus2* on node 1, and *node2_clus1* and *node2_clus2* on node 2 respectively.

- The `cluster1::*>` prompt indicates the name of the cluster.
- The cluster ports used in this procedure are *e3a* and *e3b*.
- Breakout ports take the format: swp[port]s[breakout port 0-3]. For example, four breakout ports on swp1 are *swp1s0*, *swp1s1*, *swp1s2*, and *swp1s3*.

About this task

This procedure covers the following scenario:

- Switch c2 is replaced by switch sw2 first.
  - Shut down the ports to the cluster nodes. All ports must be shut down simultaneously to avoid cluster instability.
  - The cabling between the nodes and c2 is then disconnected from c2 and reconnected to sw2.
- Switch c1 is replaced by switch sw1.
  - Shut down the ports to the cluster nodes. All ports must be shut down simultaneously to avoid cluster instability.
  - The cabling between the nodes and c1 is then disconnected from c1 and reconnected to sw1.

> No operational inter-switch link (ISL) is needed during this procedure. This is by design because RCF version changes can affect ISL connectivity temporarily. To ensure non-disruptive cluster operations, the following procedure migrates all of the cluster LIFs to the operational partner switch while performing the steps on the target switch.

Step 1: Prepare for migration

1. If AutoSupport is enabled on this cluster, suppress automatic case creation by invoking an AutoSupport message:

   ```
   system node autosupport invoke -node * -type all -message MAINT=xh
   ```

   where *x* is the duration of the maintenance window in hours.

2. Change the privilege level to advanced, entering **y** when prompted to continue:

   ```
   set -privilege advanced
   ```

   The advanced prompt (*>) appears.

3. Disable auto-revert on the cluster LIFs:

   ```
   network interface modify -vserver Cluster -lif * -auto-revert false
   ```

Step 2: Configure ports and cabling

1. Determine the administrative or operational status for each cluster interface.

   Each port should display up for `Link` and `healthy` for `Health Status`.

   a. Display the network port attributes:

      ```
      network port show -ipspace Cluster
      ```

Show example

```
cluster1::*> network port show -ipspace Cluster

Node: node1

Ignore
                                                  Speed(Mbps)
Health   Health
Port      IPspace    Broadcast Domain Link MTU   Admin/Oper
Status   Status
--------- ---------- ---------------- ---- ----- ------------
-------- ------
e3a       Cluster    Cluster          up   9000  auto/100000
healthy  false
e3b       Cluster    Cluster          up   9000  auto/100000
healthy  false

Node: node2

Ignore
                                                  Speed(Mbps)
Health   Health
Port      IPspace    Broadcast Domain Link MTU   Admin/Oper
Status   Status
--------- ---------- ---------------- ---- ----- ------------
-------- ------
e3a       Cluster    Cluster          up   9000  auto/100000
healthy  false
e3b       Cluster    Cluster          up   9000  auto/100000
healthy  false
```

b. Display information about the LIFs and their designated home nodes:

`network interface show -vserver Cluster`

Each LIF should display `up/up` for `Status Admin/Oper` and `true` for `Is Home`.

Show example

```
cluster1::*> network interface show -vserver Cluster

            Logical      Status     Network            Current
Current Is
Vserver     Interface    Admin/Oper Address/Mask       Node
Port    Home
----------- -----------  ---------- ------------------
----------- ------- ----
Cluster
            node1_clus1  up/up      169.254.209.69/16  node1
e3a     true
            node1_clus2  up/up      169.254.49.125/16  node1
e3b     true
            node2_clus1  up/up      169.254.47.194/16  node2
e3a     true
            node2_clus2  up/up      169.254.19.183/16  node2
e3b     true
```

2. The cluster ports on each node are connected to existing cluster switches in the following way (from the nodes' perspective) using the command:

   `network device-discovery show -protocol`

   Show example

```
cluster1::*> network device-discovery show -protocol cdp
Node/       Local  Discovered
Protocol    Port   Device (LLDP: ChassisID)  Interface
Platform
----------- ------ ------------------------- ----------------
----------------
node1      /cdp
            e3a    c1 (6a:ad:4f:98:3b:3f)    0/1               -
            e3b    c2 (6a:ad:4f:98:4c:a4)    0/1               -
node2      /cdp
            e3a    c1 (6a:ad:4f:98:3b:3f)    0/2               -
            e3b    c2 (6a:ad:4f:98:4c:a4)    0/2               -
```

3. The cluster ports and switches are connected in the following way (from the switches' perspective) using the command:

   `show cdp neighbors`

Show example

```
c1# show cdp neighbors

Capability Codes: R - Router, T - Trans-Bridge, B - Source-Route-
Bridge
                  S - Switch, H - Host, I - IGMP, r - Repeater,
                  V - VoIP-Phone, D - Remotely-Managed-Device,
                  s - Supports-STP-Dispute

Device-ID             Local Intrfce Hldtme Capability  Platform
Port ID
node1                 0/1           124     H          AFF-A400
e3a
node2                 0/2           124     H          AFF-A400
e3a
c2                    0/13          179     S I s      CN1610
0/13
c2                    0/14          175     S I s      CN1610
0/14
c2                    0/15          179     S I s      CN1610
0/15
c2                    0/16          175     S I s      CN1610
0/16

c2# show cdp neighbors

Capability Codes: R - Router, T - Trans-Bridge, B - Source-Route-
Bridge
                  S - Switch, H - Host, I - IGMP, r - Repeater,
                  V - VoIP-Phone, D - Remotely-Managed-Device,
                  s - Supports-STP-Dispute


Device-ID             Local Intrfce Hldtme Capability  Platform
Port ID
node1                 0/1           124    H           AFF-A400
e3b
node2                 0/2           124    H           AFF-A400
e3b
c1                    0/13          175    S I s       CN1610
0/13
c1                    0/14          175    S I s       CN1610
0/14
c1                    0/15          175    S I s       CN1610
0/15
c1                    0/16          175    S I s       CN1610
0/16
```

4. Verify the connectivity of the remote cluster interfaces:

ONTAP 9.9.1 and later

You can use the `network interface check cluster-connectivity` command to start an accessibility check for cluster connectivity and then display the details:

`network interface check cluster-connectivity start` and `network interface check cluster-connectivity show`

```
cluster1::*> network interface check cluster-connectivity start
```

NOTE: Wait for a number of seconds before running the `show` command to display the details.

```
cluster1::*> network interface check cluster-connectivity show
                                  Source           Destination
Packet
Node   Date                       LIF              LIF
Loss
------ -------------------------- ---------------- ----------------
-----------
node1
       3/5/2022 19:21:18 -06:00   node1_clus2      node2-clus1
none
       3/5/2022 19:21:20 -06:00   node1_clus2      node2_clus2
none
node2
       3/5/2022 19:21:18 -06:00   node2_clus2      node1_clus1
none
       3/5/2022 19:21:20 -06:00   node2_clus2      node1_clus2
none
```

All ONTAP releases

For all ONTAP releases, you can also use the `cluster ping-cluster -node <name>` command to check the connectivity:

```
cluster ping-cluster -node <name>
```

```
cluster1::*> cluster ping-cluster -node local
Host is node2
Getting addresses from network interface table...
Cluster node1_clus1 169.254.209.69 node1     e3a
Cluster node1_clus2 169.254.49.125 node1     e3b
Cluster node2_clus1 169.254.47.194 node2     e3a
Cluster node2_clus2 169.254.19.183 node2     e3b
Local = 169.254.47.194 169.254.19.183
Remote = 169.254.209.69 169.254.49.125
Cluster Vserver Id = 4294967293
Ping status:....
Basic connectivity succeeds on 4 path(s)
Basic connectivity fails on 0 path(s)
................
Detected 9000 byte MTU on 4 path(s):
    Local 169.254.19.183 to Remote 169.254.209.69
    Local 169.254.19.183 to Remote 169.254.49.125
    Local 169.254.47.194 to Remote 169.254.209.69
    Local 169.254.47.194 to Remote 169.254.49.125
Larger than PMTU communication succeeds on 4 path(s)
RPC status:
2 paths up, 0 paths down (tcp check)
2 paths up, 0 paths down (udp check)
```

5. On switch c2, shut down the ports connected to the cluster ports of the nodes in order to fail over the cluster LIFs.

```
(c2)# configure
(c2)(Config)# interface 0/1-0/12
(c2)(Interface 0/1-0/12)# shutdown
(c2)(Interface 0/1-0/12)# exit
(c2)(Config)# exit
(c2)#
```

6. Move the node cluster ports from the old switch c2 to the new switch sw2, using appropriate cabling supported by NVIDIA SN2100.
7. Display the network port attributes:

```
network port show -ipspace Cluster
```

Show example

```
cluster1::*> network port show -ipspace Cluster

Node: node1

Ignore
                                                  Speed(Mbps)  Health
Health
Port      IPspace    Broadcast Domain Link MTU   Admin/Oper   Status
Status
--------- ---------- ---------------- ---- ----- ------------
-------- ------
e3a       Cluster    Cluster          up   9000  auto/100000
healthy  false
e3b       Cluster    Cluster          up   9000  auto/100000
healthy  false

Node: node2

Ignore
                                                  Speed(Mbps)  Health
Health
Port      IPspace    Broadcast Domain Link MTU   Admin/Oper   Status
Status
--------- ---------- ---------------- ---- ----- ------------
-------- ------
e3a       Cluster    Cluster          up   9000  auto/100000
healthy  false
e3b       Cluster    Cluster          up   9000  auto/100000
healthy  false
```

8. The cluster ports on each node are now connected to cluster switches in the following way, from the nodes' perspective:

   `network device-discovery show -protocol`

Show example

```
cluster1::*> network device-discovery show -protocol lldp

Node/       Local  Discovered
Protocol    Port   Device (LLDP: ChassisID)  Interface
Platform
----------- ------ ------------------------- ----------------
----------------
node1      /lldp
            e3a    c1  (6a:ad:4f:98:3b:3f)   0/1               -
            e3b    sw2 (b8:ce:f6:19:1a:7e)   swp3              -
node2      /lldp
            e3a    c1  (6a:ad:4f:98:3b:3f)   0/2               -
            e3b    sw2 (b8:ce:f6:19:1b:96)   swp4              -
```

9. On switch sw2, verify that all node cluster ports are up:

   `net show interface`

Show example

```
cumulus@sw2:~$ net show interface

State  Name         Spd   MTU    Mode        LLDP
Summary
-----  -----------  ----  -----  ----------  -----------------
----------------------
...
...
UP     swp3         100G  9216   Trunk/L2    e3b
Master: bridge(UP)
UP     swp4         100G  9216   Trunk/L2    e3b
Master: bridge(UP)
UP     swp15        100G  9216   BondMember  sw1 (swp15)
Master: cluster_isl(UP)
UP     swp16        100G  9216   BondMember  sw1 (swp16)
Master: cluster_isl(UP)
```

10. On switch c1, shut down the ports connected to the cluster ports of the nodes in order to fail over the cluster LIFs.

```
(c1)# configure
(c1)(Config)# interface 0/1-0/12
(c1)(Interface 0/1-0/12)# shutdown
(c1)(Interface 0/1-0/12)# exit
(c1)(Config)# exit
(c1)#
```

11. Move the node cluster ports from the old switch c1 to the new switch sw1, using appropriate cabling supported by NVIDIA SN2100.
12. Verify the final configuration of the cluster:

    `network port show -ipspace Cluster`

    Each port should display `up` for `Link` and `healthy` for `Health Status`.

Show example

```
cluster1::*> network port show -ipspace Cluster

Node: node1

Ignore
                                                  Speed(Mbps)  Health
Health
Port      IPspace    Broadcast Domain Link MTU   Admin/Oper   Status
Status
--------- ---------- ---------------- ---- ----- ------------
-------- ------
e3a       Cluster    Cluster          up   9000  auto/100000
healthy  false
e3b       Cluster    Cluster          up   9000  auto/100000
healthy  false

Node: node2

Ignore
                                                  Speed(Mbps)  Health
Health
Port      IPspace    Broadcast Domain Link MTU   Admin/Oper   Status
Status
--------- ---------- ---------------- ---- ----- ------------
-------- ------
e3a       Cluster    Cluster          up   9000  auto/100000
healthy  false
e3b       Cluster    Cluster          up   9000  auto/100000
healthy  false
```

13. The cluster ports on each node are now connected to cluster switches in the following way, from the nodes' perspective:

    `network device-discovery show -protocol`

Show example

```
cluster1::*> network device-discovery show -protocol lldp

Node/       Local  Discovered
Protocol    Port   Device (LLDP: ChassisID)  Interface
Platform
----------- ------ ------------------------- --------------
----------------
node1      /lldp
            e3a    sw1 (b8:ce:f6:19:1a:7e)   swp3           -
            e3b    sw2 (b8:ce:f6:19:1b:96)   swp3           -
node2      /lldp
            e3a    sw1 (b8:ce:f6:19:1a:7e)   swp4           -
            e3b    sw2 (b8:ce:f6:19:1b:96)   swp4           -
```

14. On switches sw1 and sw2, verify that all node cluster ports are up:

    `net show interface`

Show example

```
cumulus@sw1:~$ net show interface

State  Name         Spd   MTU    Mode        LLDP
Summary
-----  -----------  ----  -----  ----------  -----------------
----------------------
...
...
UP     swp3         100G  9216   Trunk/L2    e3a
Master: bridge(UP)
UP     swp4         100G  9216   Trunk/L2    e3a
Master: bridge(UP)
UP     swp15        100G  9216   BondMember  sw2 (swp15)
Master: cluster_isl(UP)
UP     swp16        100G  9216   BondMember  sw2 (swp16)
Master: cluster_isl(UP)


cumulus@sw2:~$ net show interface

State  Name         Spd   MTU    Mode        LLDP
Summary
-----  -----------  ----  -----  ----------  -----------------
----------------------
...
...
UP     swp3         100G  9216   Trunk/L2    e3b
Master: bridge(UP)
UP     swp4         100G  9216   Trunk/L2    e3b
Master: bridge(UP)
UP     swp15        100G  9216   BondMember  sw1 (swp15)
Master: cluster_isl(UP)
UP     swp16        100G  9216   BondMember  sw1 (swp16)
Master: cluster_isl(UP)
```

15. Verify that both nodes each have one connection to each switch:

```
net show lldp
```

Show example

The following example shows the appropriate results for both switches:

```
cumulus@sw1:~$ net show lldp

LocalPort  Speed  Mode        RemoteHost          RemotePort
---------  -----  ----------  ------------------  -----------
swp3       100G   Trunk/L2    node1               e3a
swp4       100G   Trunk/L2    node2               e3a
swp15      100G   BondMember  sw2                 swp15
swp16      100G   BondMember  sw2                 swp16

cumulus@sw2:~$ net show lldp

LocalPort  Speed  Mode        RemoteHost          RemotePort
---------  -----  ----------  ------------------  -----------
swp3       100G   Trunk/L2    node1               e3b
swp4       100G   Trunk/L2    node2               e3b
swp15      100G   BondMember  sw1                 swp15
swp16      100G   BondMember  sw1                 swp16
```

Step 3: Verify the configuration

1. Enable auto-revert on the cluster LIFs:

   ```
   cluster1::*> network interface modify -vserver Cluster -lif * -auto-revert
   true
   ```

2. On switch sw2, shut down and restart all cluster ports to trigger an auto-revert of all cluster LIFs that are not on their home ports.

Cumulus 4.4.3

```
cumulus@sw2:mgmt:~$ net add interface swp1-14 link down
cumulus@sw2:mgmt:~$ net pending
cumulus@sw2:mgmt:~$ net commit

(Wait for 5-10 seconds before re-enabling the ports)

cumulus@sw2:mgmt:~$ net add interface swp1-14 link up
cumulus@sw2:mgmt:~$ net pending
cumulus@sw2:mgmt:~$ net commit

(After executing the link state up command, the nodes detect the change
and begin to auto-revert the cluster LIFs to their home ports)
```

Cumulus 5.x

```
cumulus@sw2:mgmt:~$ nv set interface swp1-14 link state down
cumulus@sw2:mgmt:~$ nv config apply
cumulus@sw2:mgmt:~$ nv show interface

(Wait for 5-10 seconds before re-enabling the ports)

cumulus@sw2:mgmt:~$ nv set interface swp1-14 link state up
cumulus@sw2:mgmt:~$ nv config apply
cumulus@sw2:mgmt:~$ nv show interface

(After executing the link state up command, the nodes detect the change
and begin to auto-revert the cluster LIFs to their home ports)
```

3. Verify that the cluster LIFs have reverted to their home ports (this might take a minute):

   ```
   network interface show -vserver Cluster
   ```

   If any of the cluster LIFs have not reverted to their home port, manually revert them. You must connect to each node-mgmt LIF or SP/BMC system console of the local node that owns the LIF:

   ```
   network interface revert -vserver Cluster -lif *
   ```

4. Change the privilege level back to admin:

   ```
   set -privilege admin
   ```

5. If you suppressed automatic case creation, re-enable it by invoking an AutoSupport message:

   ```
   system node autosupport invoke -node * -type all -message MAINT=END
   ```

What's next?

After you've migrated your switches, you can configure switch health monitoring.

Migrate from a Cisco cluster switch to a NVIDIA SN2100 cluster switch

You can migrate Cisco cluster switches for an ONTAP cluster to NVIDIA SN2100 cluster switches. This is a nondisruptive procedure.

Review requirements

You must be aware of certain configuration information, port connections and cabling requirements when you are replacing some older Cisco cluster switches with NVIDIA SN2100 cluster switches. See Overview of installation and configuration for NVIDIA SN2100 switches.

Supported switches

The following Cisco cluster switches are supported:

- Nexus 9336C-FX2
- Nexus 92300YC
- Nexus 5596UP
- Nexus 3232C
- Nexus 3132Q-V

For details of supported ports and their configurations, see the Hardware Universe .

What you'll need

Ensure that:

- The existing cluster is properly set up and functioning.
- All cluster ports are in the **up** state to ensure nondisruptive operations.
- The NVIDIA SN2100 cluster switches are configured and operating under the proper version of Cumulus Linux installed with the reference configuration file (RCF) applied.
- The existing cluster network configuration have the following:
  - A redundant and fully functional NetApp cluster using both older Cisco switches.
  - Management connectivity and console access to both the older Cisco switches and the new switches.
  - All cluster LIFs in the up state with the cluster LIFs are on their home ports.
  - ISL ports enabled and cabled between the older Cisco switches and between the new switches.
- Some of the ports are configured on NVIDIA SN2100 switches to run at 40 GbE or 100 GbE.
- You have planned, migrated, and documented 40 GbE and 100 GbE connectivity from nodes to NVIDIA SN2100 cluster switches.

If you are changing the port speed of the e0a and e1a cluster ports on AFF A800 or AFF C800 systems, you might observe malformed packets being received after the speed conversion. See Bug 1570339 and the Knowledge Base article CRC errors on T6 ports after converting from 40GbE to 100GbE for guidance.

Migrate the switches

About the examples

In this procedure, Cisco Nexus 3232C cluster switches are used for example commands and outputs.

The examples in this procedure use the following switch and node nomenclature:

- The existing Cisco Nexus 3232C cluster switches are *c1* and *c2*.
- The new NVIDIA SN2100 cluster switches are *sw1* and *sw2*.
- The nodes are *node1* and *node2*.
- The cluster LIFs are *node1_clus1* and *node1_clus2* on node 1, and *node2_clus1* and *node2_clus2* on node 2 respectively.
- The `cluster1::*>` prompt indicates the name of the cluster.
- The cluster ports used in this procedure are *e3a* and *e3b*.
- Breakout ports take the format: swp[port]s[breakout port 0-3]. For example, four breakout ports on swp1 are *swp1s0*, *swp1s1*, *swp1s2*, and *swp1s3*.

About this task

This procedure covers the following scenario:

- Switch c2 is replaced by switch sw2 first.
  - Shut down the ports to the cluster nodes. All ports must be shut down simultaneously to avoid cluster instability.
  - Cabling between the nodes and c2 are then disconnected from c2 and reconnected to sw2.
- Switch c1 is replaced by switch sw1.
  - Shut down the ports to the cluster nodes. All ports must be shut down simultaneously to avoid cluster instability.
  - Cabling between the nodes and c1 are then disconnected from c1 and reconnected to sw1.

Step 1: Prepare for migration

1. If AutoSupport is enabled on this cluster, suppress automatic case creation by invoking an AutoSupport message:

   ```
   system node autosupport invoke -node * -type all -message MAINT=xh
   ```

   where *x* is the duration of the maintenance window in hours.

2. Change the privilege level to advanced, entering **y** when prompted to continue:

   ```
   set -privilege advanced
   ```

   The advanced prompt (*>) appears.

3. Disable auto-revert on the cluster LIFs:

   ```
   network interface modify -vserver Cluster -lif * -auto-revert false
   ```

Step 2: Configure ports and cabling

1. Determine the administrative or operational status for each cluster interface.

   Each port should display up for `Link` and healthy for `Health Status`.

   a. Display the network port attributes:

      `network port show -ipspace Cluster`

      Show example

```
cluster1::*> network port show -ipspace Cluster

Node: node1

Ignore
                                                  Speed(Mbps)
Health   Health
Port      IPspace    Broadcast Domain Link MTU   Admin/Oper
Status   Status
--------- ---------- ---------------- ---- ----- ------------
-------- ------
e3a       Cluster    Cluster          up   9000  auto/100000
healthy  false
e3b       Cluster    Cluster          up   9000  auto/100000
healthy  false

Node: node2

Ignore
                                                  Speed(Mbps)
Health   Health
Port      IPspace    Broadcast Domain Link MTU   Admin/Oper
Status   Status
--------- ---------- ---------------- ---- ----- ------------
-------- ------
e3a       Cluster    Cluster          up   9000  auto/100000
healthy  false
e3b       Cluster    Cluster          up   9000  auto/100000
healthy  false
```

   b. Display information about the logical interfaces and their designated home nodes:

      `network interface show -vserver Cluster`

      Each LIF should display `up/up` for `Status Admin/Oper` and true for `Is Home`.

Show example

```
cluster1::*> network interface show -vserver Cluster

            Logical      Status     Network            Current
Current Is
Vserver     Interface    Admin/Oper Address/Mask       Node
Port    Home
----------- -----------  ---------- ------------------
----------- ------- ----
Cluster
            node1_clus1  up/up      169.254.209.69/16  node1
e3a     true
            node1_clus2  up/up      169.254.49.125/16  node1
e3b     true
            node2_clus1  up/up      169.254.47.194/16  node2
e3a     true
            node2_clus2  up/up      169.254.19.183/16  node2
e3b     true
```

2. The cluster ports on each node are connected to existing cluster switches in the following way (from the nodes' perspective):

   `network device-discovery show -protocol lldp`

   Show example

```
cluster1::*> network device-discovery show -protocol lldp
Node/       Local  Discovered
Protocol    Port   Device (LLDP: ChassisID)  Interface
Platform
----------- ------ ------------------------- ----------------
----------------
node1      /lldp
            e3a    c1 (6a:ad:4f:98:3b:3f)    Eth1/1            -
            e3b    c2 (6a:ad:4f:98:4c:a4)    Eth1/1            -
node2      /lldp
            e3a    c1 (6a:ad:4f:98:3b:3f)    Eth1/2            -
            e3b    c2 (6a:ad:4f:98:4c:a4)    Eth1/2            -
```

3. The cluster ports and switches are connected in the following way (from the switches' perspective):

   `show cdp neighbors`

Show example

```
c1# show cdp neighbors

Capability Codes: R - Router, T - Trans-Bridge, B - Source-Route-
Bridge
                  S - Switch, H - Host, I - IGMP, r - Repeater,
                  V - VoIP-Phone, D - Remotely-Managed-Device,
                  s - Supports-STP-Dispute

Device-ID             Local Intrfce Hldtme Capability  Platform
Port ID
node1                 Eth1/1         124   H           AFF-A400
e3a
node2                 Eth1/2         124   H           AFF-A400
e3a
c2                    Eth1/31        179   S I s       N3K-C3232C
Eth1/31
c2                    Eth1/32        175   S I s       N3K-C3232C
Eth1/32

c2# show cdp neighbors

Capability Codes: R - Router, T - Trans-Bridge, B - Source-Route-
Bridge
                  S - Switch, H - Host, I - IGMP, r - Repeater,
                  V - VoIP-Phone, D - Remotely-Managed-Device,
                  s - Supports-STP-Dispute


Device-ID             Local Intrfce Hldtme Capability  Platform
Port ID
node1                 Eth1/1        124    H           AFF-A400
e3b
node2                 Eth1/2        124    H           AFF-A400
e3b
c1                    Eth1/31       175    S I s       N3K-C3232C
Eth1/31
c1                    Eth1/32       175    S I s       N3K-C3232C
Eth1/32
```

4. Verify the connectivity of the remote cluster interfaces:

ONTAP 9.9.1 and later

You can use the `network interface check cluster-connectivity` command to start an accessibility check for cluster connectivity and then display the details:

`network interface check cluster-connectivity start` and `network interface check cluster-connectivity show`

```
cluster1::*> network interface check cluster-connectivity start
```

NOTE: Wait for a number of seconds before running the `show` command to display the details.

```
cluster1::*> network interface check cluster-connectivity show
                                  Source           Destination
Packet
Node   Date                       LIF              LIF
Loss
------ -------------------------- ---------------- ----------------
-----------
node1
       3/5/2022 19:21:18 -06:00   node1_clus2      node2-clus1
none
       3/5/2022 19:21:20 -06:00   node1_clus2      node2_clus2
none
node2
       3/5/2022 19:21:18 -06:00   node2_clus2      node1_clus1
none
       3/5/2022 19:21:20 -06:00   node2_clus2      node1_clus2
none
```

All ONTAP releases

For all ONTAP releases, you can also use the `cluster ping-cluster -node <name>` command to check the connectivity:

```
cluster ping-cluster -node <name>
```

```
cluster1::*> cluster ping-cluster -node local
Host is node2
Getting addresses from network interface table...
Cluster node1_clus1 169.254.209.69 node1     e3a
Cluster node1_clus2 169.254.49.125 node1     e3b
Cluster node2_clus1 169.254.47.194 node2     e3a
Cluster node2_clus2 169.254.19.183 node2     e3b
Local = 169.254.47.194 169.254.19.183
Remote = 169.254.209.69 169.254.49.125
Cluster Vserver Id = 4294967293
Ping status:....
Basic connectivity succeeds on 4 path(s)
Basic connectivity fails on 0 path(s)
................
Detected 9000 byte MTU on 4 path(s):
    Local 169.254.19.183 to Remote 169.254.209.69
    Local 169.254.19.183 to Remote 169.254.49.125
    Local 169.254.47.194 to Remote 169.254.209.69
    Local 169.254.47.194 to Remote 169.254.49.125
Larger than PMTU communication succeeds on 4 path(s)
RPC status:
2 paths up, 0 paths down (tcp check)
2 paths up, 0 paths down (udp check)
```

5. On switch c2, shut down the ports connected to the cluster ports of the nodes in order to fail over the cluster LIFs.

```
(c2)# configure
Enter configuration commands, one per line. End with CNTL/Z.

(c2)(Config)# interface
(c2)(config-if-range)# shutdown <interface_list>
(c2)(config-if-range)# exit
(c2)(Config)# exit
(c2)#
```

6. Move the node cluster ports from the old switch c2 to the new switch sw2, using appropriate cabling supported by NVIDIA SN2100.
7. Display the network port attributes:

```
network port show -ipspace Cluster
```

Show example

```
cluster1::*> network port show -ipspace Cluster

Node: node1

Ignore
                                                  Speed(Mbps)  Health
Health
Port      IPspace    Broadcast Domain Link MTU   Admin/Oper   Status
Status
--------- ---------- ---------------- ---- ----- ------------
-------- ------
e3a       Cluster    Cluster          up   9000  auto/100000
healthy  false
e3b       Cluster    Cluster          up   9000  auto/100000
healthy  false

Node: node2

Ignore
                                                  Speed(Mbps)  Health
Health
Port      IPspace    Broadcast Domain Link MTU   Admin/Oper   Status
Status
--------- ---------- ---------------- ---- ----- ------------
-------- ------
e3a       Cluster    Cluster          up   9000  auto/100000
healthy  false
e3b       Cluster    Cluster          up   9000  auto/100000
healthy  false
```

8. The cluster ports on each node are now connected to cluster switches in the following way, from the nodes' perspective:

Show example

```
cluster1::*> network device-discovery show -protocol lldp

Node/       Local  Discovered
Protocol    Port   Device (LLDP: ChassisID)  Interface
Platform
----------- ------ ------------------------- ----------------
----------------
node1      /lldp
            e3a    c1  (6a:ad:4f:98:3b:3f)   Eth1/1            -
            e3b    sw2 (b8:ce:f6:19:1a:7e)   swp3              -
node2      /lldp
            e3a    c1  (6a:ad:4f:98:3b:3f)   Eth1/2            -
            e3b    sw2 (b8:ce:f6:19:1b:96)   swp4              -
```

9. On switch sw2, verify that all node cluster ports are up:

   `net show interface`

   Show example

```
cumulus@sw2:~$ net show interface

State  Name         Spd   MTU    Mode        LLDP
Summary
-----  -----------  ----  -----  ----------  -----------------
----------------------
...
...
UP     swp3         100G  9216   Trunk/L2    e3b
Master: bridge(UP)
UP     swp4         100G  9216   Trunk/L2    e3b
Master: bridge(UP)
UP     swp15        100G  9216   BondMember  sw1 (swp15)
Master: cluster_isl(UP)
UP     swp16        100G  9216   BondMember  sw1 (swp16)
Master: cluster_isl(UP)
```

10. On switch c1, shut down the ports connected to the cluster ports of the nodes in order to fail over the cluster LIFs.

```
(c1)# configure
Enter configuration commands, one per line. End with CNTL/Z.

(c1)(Config)# interface
(c1)(config-if-range)# shutdown <interface_list>
(c1)(config-if-range)# exit
(c1)(Config)# exit
(c1)#
```

11. Move the node cluster ports from the old switch c1 to the new switch sw1, using appropriate cabling supported by NVIDIA SN2100.
12. Verify the final configuration of the cluster:

    `network port show -ipspace Cluster`

    Each port should display `up` for `Link` and healthy for `Health Status`.

Show example

```
cluster1::*> network port show -ipspace Cluster

Node: node1

Ignore
                                                  Speed(Mbps)  Health
Health
Port      IPspace    Broadcast Domain Link MTU   Admin/Oper   Status
Status
--------- ---------- ---------------- ---- ----- ------------
-------- ------
e3a       Cluster    Cluster          up   9000  auto/100000
healthy  false
e3b       Cluster    Cluster          up   9000  auto/100000
healthy  false

Node: node2

Ignore
                                                  Speed(Mbps)  Health
Health
Port      IPspace    Broadcast Domain Link MTU   Admin/Oper   Status
Status
--------- ---------- ---------------- ---- ----- ------------
-------- ------
e3a       Cluster    Cluster          up   9000  auto/100000
healthy  false
e3b       Cluster    Cluster          up   9000  auto/100000
healthy  false
```

13. The cluster ports on each node are now connected to cluster switches in the following way, from the nodes' perspective:

Show example

```
cluster1::*> network device-discovery show -protocol lldp

Node/       Local  Discovered
Protocol    Port   Device (LLDP: ChassisID)  Interface
Platform
----------- ------ ------------------------- --------------
----------------
node1      /lldp
            e3a    sw1 (b8:ce:f6:19:1a:7e)   swp3           -
            e3b    sw2 (b8:ce:f6:19:1b:96)   swp3           -
node2      /lldp
            e3a    sw1 (b8:ce:f6:19:1a:7e)   swp4           -
            e3b    sw2 (b8:ce:f6:19:1b:96)   swp4           -
```

14. On switches sw1 and sw2, verify that all node cluster ports are up:

    `net show interface`

Show example

```
cumulus@sw1:~$ net show interface

State  Name         Spd   MTU    Mode        LLDP
Summary
-----  -----------  ----  -----  ----------  -----------------
----------------------
...
...
UP     swp3         100G  9216   Trunk/L2    e3a
Master: bridge(UP)
UP     swp4         100G  9216   Trunk/L2    e3a
Master: bridge(UP)
UP     swp15        100G  9216   BondMember  sw2 (swp15)
Master: cluster_isl(UP)
UP     swp16        100G  9216   BondMember  sw2 (swp16)
Master: cluster_isl(UP)


cumulus@sw2:~$ net show interface

State  Name         Spd   MTU    Mode        LLDP
Summary
-----  -----------  ----  -----  ----------  -----------------
----------------------
...
...
UP     swp3         100G  9216   Trunk/L2    e3b
Master: bridge(UP)
UP     swp4         100G  9216   Trunk/L2    e3b
Master: bridge(UP)
UP     swp15        100G  9216   BondMember  sw1 (swp15)
Master: cluster_isl(UP)
UP     swp16        100G  9216   BondMember  sw1 (swp16)
Master: cluster_isl(UP)
```

15. Verify that both nodes each have one connection to each switch:

    ```
    net show lldp
    ```

Show example

The following example shows the appropriate results for both switches:

```
cumulus@sw1:~$ net show lldp

LocalPort  Speed  Mode        RemoteHost          RemotePort
---------  -----  ----------  ------------------  -----------
swp3       100G   Trunk/L2    node1               e3a
swp4       100G   Trunk/L2    node2               e3a
swp15      100G   BondMember  sw2                 swp15
swp16      100G   BondMember  sw2                 swp16

cumulus@sw2:~$ net show lldp

LocalPort  Speed  Mode        RemoteHost          RemotePort
---------  -----  ----------  ------------------  -----------
swp3       100G   Trunk/L2    node1               e3b
swp4       100G   Trunk/L2    node2               e3b
swp15      100G   BondMember  sw1                 swp15
swp16      100G   BondMember  sw1                 swp16
```

Step 3: Verify the configuration

1. Enable auto-revert on the cluster LIFs:

   ```
   cluster1::*> network interface modify -vserver Cluster -lif * -auto-revert
   true
   ```

2. On switch sw2, shut down and restart all cluster ports to trigger an auto-revert of all cluster LIFs that are not on their home ports.

Cumulus 4.4.3

```
cumulus@sw2:mgmt:~$ net add interface swp1-14 link down
cumulus@sw2:mgmt:~$ net pending
cumulus@sw2:mgmt:~$ net commit

(Wait for 5-10 seconds before re-enabling the ports)

cumulus@sw2:mgmt:~$ net add interface swp1-14 link up
cumulus@sw2:mgmt:~$ net pending
cumulus@sw2:mgmt:~$ net commit

(After executing the link state up command, the nodes detect the change
and begin to auto-revert the cluster LIFs to their home ports)
```

Cumulus 5.x

```
cumulus@sw2:mgmt:~$ nv set interface swp1-14 link state down
cumulus@sw2:mgmt:~$ nv config apply
cumulus@sw2:mgmt:~$ nv show interface

(Wait for 5-10 seconds before re-enabling the ports)

cumulus@sw2:mgmt:~$ nv set interface swp1-14 link state up
cumulus@sw2:mgmt:~$ nv config apply
cumulus@sw2:mgmt:~$ nv show interface

(After executing the link state up command, the nodes detect the change
and begin to auto-revert the cluster LIFs to their home ports)
```

3. Verify that the cluster LIFs have reverted to their home ports (this might take a minute):

   ```
   network interface show -vserver Cluster
   ```

   If any of the cluster LIFs have not reverted to their home port, manually revert them. You must connect to each node-mgmt LIF or SP/BMC system console of the local node that owns the LIF:

   ```
   network interface revert -vserver Cluster -lif *
   ```

4. Change the privilege level back to admin:

   ```
   set -privilege admin
   ```

5. If you suppressed automatic case creation, re-enable it by invoking an AutoSupport message:

   ```
   system node autosupport invoke -node * -type all -message MAINT=END
   ```

What's next?

After you've migrated your switches, you can configure switch health monitoring.

Migrate to a two-node switched cluster with NVIDIA SN2100 cluster switches

If you have an existing two-node switchless cluster environment, you can migrate to a two-node switched cluster environment using NVIDIA SN2100 switches to enable you to scale beyond two nodes in the cluster.

The procedure you use depends on whether you have two dedicated cluster-network ports on each controller or a single cluster port on each controller. The process documented works for all nodes using optical or Twinax ports but is not supported on this switch if nodes are using onboard 10GBASE-T RJ45 ports for the cluster-network ports.

Review requirements

Two-node switchless configuration

Ensure that:

- The two-node switchless configuration are properly set up and functioning.
- The nodes are running ONTAP 9.10.1P3 and later.
- All cluster ports are in the **up** state.
- All cluster logical interfaces (LIFs) are in the **up** state and on their home ports.

NVIDIA SN2100 cluster switch configuration

Ensure that:

- Both switches have management network connectivity.
- There is console access to the cluster switches.
- NVIDIA SN2100 node-to-node switch and switch-to-switch connections use Twinax or fiber cables.

> See Review cabling and configuration considerations for caveats and further details. The Hardware Universe - Switches also contains more information about cabling.

- Inter-Switch Link (ISL) cables are connected to ports swp15 and swp16 on both NVIDIA SN2100 switches.
- Initial customization of both the SN2100 switches are completed, so that:
  - SN2100 switches are running the latest version of Cumulus Linux
  - Reference Configuration Files (RCFs) are applied to the switches
  - Any site customization, such as SMTP, SNMP, and SSH are configured on the new switches.

  The Hardware Universe contains the latest information about the actual cluster ports for your platforms.

Migrate the switches

About the examples

The examples in this procedure use the following cluster switch and node nomenclature:

- The names of the SN2100 switches are *sw1* and *sw2*.

- The names of the cluster SVMs are *node1* and *node2*.
- The names of the LIFs are *node1_clus1* and *node1_clus2* on node 1, and *node2_clus1* and *node2_clus2* on node 2 respectively.
- The `cluster1::*>` prompt indicates the name of the cluster.
- The cluster ports used in this procedure are *e3a* and *e3b*.
- Breakout ports take the format: swp[port]s[breakout port 0-3]. For example, four breakout ports on swp1 are *swp1s0*, *swp1s1*, *swp1s2*, and *swp1s3*.

Step 1: Prepare for migration

1. If AutoSupport is enabled on this cluster, suppress automatic case creation by invoking an AutoSupport message: `system node autosupport invoke -node * -type all -message MAINT=xh`

   where *x* is the duration of the maintenance window in hours.

2. Change the privilege level to advanced, entering `y` when prompted to continue: `set -privilege advanced`

   The advanced prompt (`*>`) appears.

Step 2: Configure ports and cabling

Cumulus Linux 4.4.x

1. Disable all node-facing ports (not ISL ports) on both the new cluster switches sw1 and sw2.

   You must not disable the ISL ports.

   The following commands disable the node-facing ports on switches sw1 and sw2:

   ```
   cumulus@sw1:~$ net add interface swp1s0-3, swp2s0-3, swp3-14 link
   down
   cumulus@sw1:~$ net pending
   cumulus@sw1:~$ net commit

   cumulus@sw2:~$ net add interface swp1s0-3, swp2s0-3, swp3-14 link
   down
   cumulus@sw2:~$ net pending
   cumulus@sw2:~$ net commit
   ```

2. Verify that the ISL and the physical ports on the ISL between the two SN2100 switches sw1 and sw2 are up on ports swp15 and swp16:

   ```
   net show interface
   ```

   The following commands show that the ISL ports are up on switches sw1 and sw2:

```
cumulus@sw1:~$ net show interface

State  Name       Spd   MTU    Mode        LLDP         Summary
-----  ---------  ----  -----  ----------  -----------
-----------------------
...
...
UP     swp15      100G  9216   BondMember  sw2 (swp15)  Master:
cluster_isl(UP)
UP     swp16      100G  9216   BondMember  sw2 (swp16)  Master:
cluster_isl(UP)

cumulus@sw2:~$ net show interface

State  Name       Spd   MTU    Mode        LLDP         Summary
-----  ---------  ----  -----  ----------  -----------
-----------------------
...
...
UP     swp15      100G  9216   BondMember  sw1 (swp15)  Master:
cluster_isl(UP)
UP     swp16      100G  9216   BondMember  sw1 (swp16)  Master:
cluster_isl(UP)
```

Cumulus Linux 5.x

1. Disable all node-facing ports (not ISL ports) on both new cluster switches sw1 and sw2.

   You must not disable the ISL ports.

   The following commands disable the node-facing ports on switches sw1 and sw2:

```
cumulus@sw1:~$ nv set interface swp1s0-3,swp2s0-3,swp3-14 link state
down
cumulus@sw1:~$ nv config apply
cumulus@sw1:~$ nv config save

cumulus@sw2:~$ nv set interface swp1s0-3,swp2s0-3,swp3-14 link state
down
cumulus@sw2:~$ nv config apply
cumulus@sw2:~$ nv config save
```

2. Verify that the ISL and the physical ports on the ISL between the two SN2100 switches sw1 and sw2 are up on ports swp15 and swp16:

   ```
   nv show interface
   ```

The following examples show that the ISL ports are up on switches sw1 and sw2:

```
cumulus@sw1:~$ nv show interface

Interface     MTU    Speed  State  Remote Host  Remote Port
Type    Summary
------------- ------ -----  ------ ------------
------------------------------------ ------- -------
...
...
+ swp14       9216          down
swp
+ swp15       9216   100G   up     ossg-rcf1    Intra-Cluster Switch
ISL Port swp15  swp
+ swp16       9216   100G   up     ossg-rcf2    Intra-Cluster Switch
ISL Port swp16  swp


cumulus@sw2:~$ nv show interface

Interface     MTU    Speed  State  Remote Host  Remote Port
Type    Summary
------------- ------ -----  ------ ------------
------------------------------------ ------- -------
...
...
+ swp14       9216          down
swp
+ swp15       9216   100G   up     ossg-rcf1    Intra-Cluster Switch
ISL Port swp15  swp
+ swp16       9216   100G   up     ossg-rcf2    Intra-Cluster Switch
ISL Port swp16  swp
```

3. Verify that all cluster ports are up:

   `network port show`

   Each port should display `up` for `Link` and healthy for `Health Status`.

Show example

```
cluster1::*> network port show

Node: node1


Ignore
                                                      Speed(Mbps)
Health   Health
Port      IPspace      Broadcast Domain Link MTU  Admin/Oper
Status   Status
--------- ------------ ---------------- ---- ---- ------------
-------- ------
e3a       Cluster      Cluster          up   9000  auto/100000
healthy  false
e3b       Cluster      Cluster          up   9000  auto/100000
healthy  false

Node: node2


Ignore
                                                      Speed(Mbps)
Health   Health
Port      IPspace      Broadcast Domain Link MTU  Admin/Oper
Status   Status
--------- ------------ ---------------- ---- ---- ------------
-------- ------
e3a       Cluster      Cluster          up   9000  auto/100000
healthy  false
e3b       Cluster      Cluster          up   9000  auto/100000
healthy  false
```

4. Verify that all cluster LIFs are up and operational:

   `network interface show`

   Each cluster LIF should display true for `Is Home` and have a `Status Admin/Oper` of `up/up`.

Show example

```
cluster1::*> network interface show -vserver Cluster

            Logical    Status     Network            Current
Current Is
Vserver     Interface  Admin/Oper Address/Mask       Node
Port    Home
----------- ---------- ---------- ------------------ -------------
------- -----
Cluster
            node1_clus1  up/up    169.254.209.69/16  node1
e3a     true
            node1_clus2  up/up    169.254.49.125/16  node1
e3b     true
            node2_clus1  up/up    169.254.47.194/16  node2
e3a     true
            node2_clus2  up/up    169.254.19.183/16  node2
e3b     true
```

5. Disable auto-revert on the cluster LIFs:

   `network interface modify -vserver Cluster -lif * -auto-revert false`

   Show example

```
cluster1::*> network interface modify -vserver Cluster -lif * -auto
-revert false

          Logical
Vserver   Interface     Auto-revert
--------- ------------- ------------
Cluster
          node1_clus1   false
          node1_clus2   false
          node2_clus1   false
          node2_clus2   false
```

6. Disconnect the cable from cluster port e3a on node1, and then connect e3a to port 3 on cluster switch sw1, using the appropriate cabling supported by the SN2100 switches.

   The Hardware Universe - Switches contains more information about cabling.

7. Disconnect the cable from cluster port e3a on node2, and then connect e3a to port 4 on cluster switch sw1,

using the appropriate cabling supported by the SN2100 switches.

Cumulus Linux 4.4.x

8. On switch sw1, enable all node-facing ports.

   The following commands enable all node-facing ports on switch sw1.

   ```
   cumulus@sw1:~$ net del interface swp1s0-3, swp2s0-3, swp3-14 link
   down
   cumulus@sw1:~$ net pending
   cumulus@sw1:~$ net commit
   ```

9. On switch sw1, verify that all ports are up:

   ```
   net show interface all
   ```

```
cumulus@sw1:~$ net show interface all

State  Name      Spd   MTU    Mode       LLDP             Summary
-----  --------- ----  -----  ---------- ---------------- --------
...
DN     swp1s0    10G   9216   Trunk/L2                    Master:
br_default(UP)
DN     swp1s1    10G   9216   Trunk/L2                    Master:
br_default(UP)
DN     swp1s2    10G   9216   Trunk/L2                    Master:
br_default(UP)
DN     swp1s3    10G   9216   Trunk/L2                    Master:
br_default(UP)
DN     swp2s0    25G   9216   Trunk/L2                    Master:
br_default(UP)
DN     swp2s1    25G   9216   Trunk/L2                    Master:
br_default(UP)
DN     swp2s2    25G   9216   Trunk/L2                    Master:
br_default(UP)
DN     swp2s3    25G   9216   Trunk/L2                    Master:
br_default(UP)
UP     swp3      100G  9216   Trunk/L2    node1 (e3a)     Master:
br_default(UP)
UP     swp4      100G  9216   Trunk/L2    node2 (e3a)     Master:
br_default(UP)
...
...
UP     swp15     100G  9216   BondMember  swp15           Master:
cluster_isl(UP)
UP     swp16     100G  9216   BondMember  swp16           Master:
cluster_isl(UP)
...
```

Cumulus Linux 5.x

8. On switch sw1, enable all node-facing ports.

   The following commands enable all node-facing ports on switch sw1.

```
cumulus@sw1:~$ nv set interface swp1s0-3,swp2s0-3,swp3-14 link state
up
cumulus@sw1:~$ nv config apply
cumulus@sw1:~$ nv config save
```

9. On switch sw1, verify that all ports are up:

```
nv show interface
```

```
cumulus@sw1:~$ nv show interface

Interface    State  Speed  MTU    Type      Remote Host
Remote Port  Summary
-----------  -----  -----  -----  --------
--------------------------  -----------  ----------
...
...
swp1s0       up     10G    9216   swp       odq-a300-1a
e0a
swp1s1       up     10G    9216   swp       odq-a300-1b
e0a
swp1s2       down   10G    9216   swp
swp1s3       down   10G    9216   swp
swp2s0       down   25G    9216   swp
swp2s1       down   25G    9216   swp
swp2s2       down   25G    9216   swp
swp2s3       down   25G    9216   swp
swp3         down          9216   swp
swp4         down          9216   swp
...
...
swp14        down          9216   swp
swp15        up     100G   9216   swp       ossg-int-rcf10
swp15
swp16        up     100G   9216   swp       ossg-int-rcf10
swp16
```

10. Verify that all cluster ports are up:

```
network port show -ipspace Cluster
```

Show example

The following example shows that all of the cluster ports are up on node1 and node2:

```
cluster1::*> network port show -ipspace Cluster

Node: node1

Ignore
                                                  Speed(Mbps)
Health   Health
Port      IPspace      Broadcast Domain Link MTU  Admin/Oper
Status   Status
--------- ------------ ---------------- ---- ---- ------------
-------- ------
e3a       Cluster      Cluster          up   9000  auto/100000
healthy  false
e3b       Cluster      Cluster          up   9000  auto/100000
healthy  false

Node: node2

Ignore
                                                  Speed(Mbps)
Health   Health
Port      IPspace      Broadcast Domain Link MTU  Admin/Oper
Status   Status
--------- ------------ ---------------- ---- ---- ------------
-------- ------
e3a       Cluster      Cluster          up   9000  auto/100000
healthy  false
e3b       Cluster      Cluster          up   9000  auto/100000
healthy  false
```

11. Display information about the status of the nodes in the cluster:

    `cluster show`

Show example

The following example displays information about the health and eligibility of the nodes in the cluster:

```
cluster1::*> cluster show

Node                 Health  Eligibility   Epsilon
-------------------- ------- ------------  ------------
node1                true    true          false
node2                true    true          false
```

12. Disconnect the cable from cluster port e3b on node1, and then connect e3b to port 3 on cluster switch sw2, using the appropriate cabling supported by the SN2100 switches.
13. Disconnect the cable from cluster port e3b on node2, and then connect e3b to port 4 on cluster switch sw2, using the appropriate cabling supported by the SN2100 switches.

Cumulus Linux 4.4.x

14. On switch sw2, enable all node-facing ports.

    The following commands enable the node-facing ports on switch sw2:

    ```
    cumulus@sw2:~$ net del interface swp1s0-3, swp2s0-3, swp3-14 link
    down
    cumulus@sw2:~$ net pending
    cumulus@sw2:~$ net commit
    ```

15. On switch sw2, verify that all ports are up:

    ```
    net show interface all
    ```

```
cumulus@sw2:~$ net show interface all

State  Name      Spd   MTU    Mode        LLDP             Summary
-----  --------- ----  -----  ----------- ---------------- --------
...
DN     swp1s0    10G   9216   Trunk/L2                     Master:
br_default(UP)
DN     swp1s1    10G   9216   Trunk/L2                     Master:
br_default(UP)
DN     swp1s2    10G   9216   Trunk/L2                     Master:
br_default(UP)
DN     swp1s3    10G   9216   Trunk/L2                     Master:
br_default(UP)
DN     swp2s0    25G   9216   Trunk/L2                     Master:
br_default(UP)
DN     swp2s1    25G   9216   Trunk/L2                     Master:
br_default(UP)
DN     swp2s2    25G   9216   Trunk/L2                     Master:
br_default(UP)
DN     swp2s3    25G   9216   Trunk/L2                     Master:
br_default(UP)
UP     swp3      100G  9216   Trunk/L2    node1 (e3b)      Master:
br_default(UP)
UP     swp4      100G  9216   Trunk/L2    node2 (e3b)      Master:
br_default(UP)
...
...
UP     swp15     100G  9216   BondMember  swp15            Master:
cluster_isl(UP)
UP     swp16     100G  9216   BondMember  swp16            Master:
cluster_isl(UP)
...
```

16. On both switches sw1 and sw2, verify that both nodes each have one connection to each switch:

```
net show lldp
```

The following example shows the appropriate results for both switches sw1 and sw2:

```
cumulus@sw1:~$ net show lldp

LocalPort  Speed  Mode        RemoteHost         RemotePort
---------  -----  ----------  -----------------  -----------
swp3       100G   Trunk/L2    node1              e3a
swp4       100G   Trunk/L2    node2              e3a
swp15      100G   BondMember  sw2                swp15
swp16      100G   BondMember  sw2                swp16

cumulus@sw2:~$ net show lldp

LocalPort  Speed  Mode        RemoteHost         RemotePort
---------  -----  ----------  -----------------  -----------
swp3       100G   Trunk/L2    node1              e3b
swp4       100G   Trunk/L2    node2              e3b
swp15      100G   BondMember  sw1                swp15
swp16      100G   BondMember  sw1                swp16
```

Cumulus Linux 5.x

14. On switch sw2, enable all node-facing ports.

    The following commands enable the node-facing ports on switch sw2:

    ```
    cumulus@sw2:~$ nv set interface swp1s0-3,swp2s0-3,swp3-14 link state
    up
    cumulus@sw2:~$ nv config apply
    cumulus@sw2:~$ nv config save
    ```

15. On switch sw2, verify that all ports are up:

    ```
    nv show interface
    ```

```
cumulus@sw2:~$ nv show interface

Interface    State  Speed  MTU    Type      Remote Host
Remote Port  Summary
-----------  -----  -----  -----  --------
-------------------------  -----------  ----------
...
...
swp1s0       up     10G    9216   swp       odq-a300-1a
e0a
swp1s1       up     10G    9216   swp       odq-a300-1b
e0a
swp1s2       down   10G    9216   swp
swp1s3       down   10G    9216   swp
swp2s0       down   25G    9216   swp
swp2s1       down   25G    9216   swp
swp2s2       down   25G    9216   swp
swp2s3       down   25G    9216   swp
swp3         down          9216   swp
swp4         down          9216   swp
...
...
swp14        down          9216   swp
swp15        up     100G   9216   swp       ossg-int-rcf10
swp15
swp16        up     100G   9216   swp       ossg-int-rcf10
swp16
```

16. On both switches sw1 and sw2, verify that both nodes each have one connection to each switch:

`nv show interface --view=lldp`

The following examples show the appropriate results for both switches sw1 and sw2:

```
cumulus@sw1:~$ nv show interface --view=lldp

Interface    Speed  Type      Remote Host
Remote Port
-----------  -----  --------  ---------------------------------
-----------
...
...
swp1s0       10G    swp       odq-a300-1a
e0a
swp1s1       10G    swp       odq-a300-1b
```

```
e0a
swp1s2       10G    swp
swp1s3       10G    swp
swp2s0       25G    swp
swp2s1       25G    swp
swp2s2       25G    swp
swp2s3       25G    swp
swp3                swp
swp4                swp
...
...
swp14               swp
swp15        100G   swp       ossg-int-rcf10
swp15
swp16        100G   swp       ossg-int-rcf10
swp16

cumulus@sw2:~$ nv show interface --view=lldp

Interface    Speed  Type      Remote Host
Remote Port
-----------  -----  --------  ----------------------------------
-----------
...
...
swp1s0       10G    swp       odq-a300-1a
e0a
swp1s1       10G    swp       odq-a300-1b
e0a
swp1s2       10G    swp
swp1s3       10G    swp
swp2s0       25G    swp
swp2s1       25G    swp
swp2s2       25G    swp
swp2s3       25G    swp
swp3                swp
swp4                swp
...
...
swp14               swp
swp15        100G   swp       ossg-int-rcf10
swp15
swp16        100G   swp       ossg-int-rcf10
swp16
```

17. Display information about the discovered network devices in your cluster:

```
network device-discovery show -protocol lldp
```

Show example

```
cluster1::*> network device-discovery show -protocol lldp
Node/       Local  Discovered
Protocol    Port   Device (LLDP: ChassisID)  Interface     Platform
----------- ------ ------------------------- ------------
----------------
node1      /lldp
            e3a    sw1 (b8:ce:f6:19:1a:7e)   swp3          -
            e3b    sw2 (b8:ce:f6:19:1b:96)   swp3          -
node2      /lldp
            e3a    sw1 (b8:ce:f6:19:1a:7e)   swp4          -
            e3b    sw2 (b8:ce:f6:19:1b:96)   swp4          -
```

18. Verify that all cluster ports are up:

```
network port show -ipspace Cluster
```

Show example

The following example shows that all of the cluster ports are up on node1 and node2:

```
cluster1::*> network port show -ipspace Cluster

Node: node1

Ignore
                                                  Speed(Mbps) Health
Health
Port      IPspace      Broadcast Domain Link MTU  Admin/Oper  Status
Status
--------- ------------ ---------------- ---- ---- -----------
-------- ------
e3a       Cluster      Cluster          up   9000  auto/10000
healthy  false
e3b       Cluster      Cluster          up   9000  auto/10000
healthy  false

Node: node2

Ignore
                                                  Speed(Mbps) Health
Health
Port      IPspace      Broadcast Domain Link MTU  Admin/Oper  Status
Status
--------- ------------ ---------------- ---- ---- -----------
-------- ------
e3a       Cluster      Cluster          up   9000  auto/10000
healthy  false
e3b       Cluster      Cluster          up   9000  auto/10000
healthy  false
```

Step 3: Verify the configuration

1. Enable auto-revert on all cluster LIFs:

   ```
   net interface modify -vserver Cluster -lif * -auto-revert true
   ```

Show example

```
cluster1::*> net interface modify -vserver Cluster -lif * -auto
-revert true

          Logical
Vserver   Interface     Auto-revert
--------- ------------- ------------
Cluster
          node1_clus1   true
          node1_clus2   true
          node2_clus1   true
          node2_clus2   true
```

2. On switch sw2, shut down and restart all cluster ports to trigger an auto-revert of all cluster LIFs that are not on their home ports.

Cumulus 4.4.3

```
cumulus@sw2:mgmt:~$ net add interface swp1-14 link down
cumulus@sw2:mgmt:~$ net pending
cumulus@sw2:mgmt:~$ net commit

(Wait for 5-10 seconds before re-enabling the ports)

cumulus@sw2:mgmt:~$ net add interface swp1-14 link up
cumulus@sw2:mgmt:~$ net pending
cumulus@sw2:mgmt:~$ net commit

(After executing the link state up command, the nodes detect the change
and begin to auto-revert the cluster LIFs to their home ports)
```

Cumulus 5.x

```
cumulus@sw2:mgmt:~$ nv set interface swp1-14 link state down
cumulus@sw2:mgmt:~$ nv config apply
cumulus@sw2:mgmt:~$ nv show interface

(Wait for 5-10 seconds before re-enabling the ports)

cumulus@sw2:mgmt:~$ nv set interface swp1-14 link state up
cumulus@sw2:mgmt:~$ nv config apply
cumulus@sw2:mgmt:~$ nv show interface

(After executing the link state up command, the nodes detect the change
and begin to auto-revert the cluster LIFs to their home ports)
```

3. Verify that the cluster LIFs have reverted to their home ports (this might take a minute):

   `network interface show -vserver Cluster`

   If any of the cluster LIFs have not reverted to their home port, manually revert them. You must connect to each node-mgmt LIF or SP/BMC system console of the local node that owns the LIF:

   `network interface revert -vserver Cluster -lif *`

4. Verify that all interfaces display `true` for `Is Home`:

   `net interface show -vserver Cluster`

   This might take a minute to complete.

Show example

The following example shows that all LIFs are up on node1 and node2 and that `Is Home` results are true:

```
cluster1::*> net interface show -vserver Cluster

          Logical      Status     Network            Current
Current Is
Vserver   Interface    Admin/Oper Address/Mask       Node       Port
Home
--------- ------------ ---------- ------------------ ----------
------- ----
Cluster
          node1_clus1  up/up      169.254.209.69/16  node1      e3a
true
          node1_clus2  up/up      169.254.49.125/16  node1      e3b
true
          node2_clus1  up/up      169.254.47.194/16  node2      e3a
true
          node2_clus2  up/up      169.254.19.183/16  node2      e3b
true
```

5. Verify that the settings are disabled:

   `network options switchless-cluster show`

   The false output in the following example shows that the configuration settings are disabled:

```
cluster1::*> network options switchless-cluster show
Enable Switchless Cluster: false
```

6. Verify the status of the node members in the cluster:

   `cluster show`

Show example

The following example shows information about the health and eligibility of the nodes in the cluster:

```
cluster1::*> cluster show

Node                 Health  Eligibility   Epsilon
-------------------- ------- ------------  --------
node1                true    true          false
node2                true    true          false
```

7. Verify the connectivity of the remote cluster interfaces:

ONTAP 9.9.1 and later

You can use the `network interface check cluster-connectivity` command to start an accessibility check for cluster connectivity and then display the details:

`network interface check cluster-connectivity start` and `network interface check cluster-connectivity show`

```
cluster1::*> network interface check cluster-connectivity start
```

NOTE: Wait for a number of seconds before running the `show` command to display the details.

```
cluster1::*> network interface check cluster-connectivity show
                                  Source           Destination
Packet
Node   Date                       LIF              LIF
Loss
------ -------------------------- ---------------- ----------------
-----------
node1
       3/5/2022 19:21:18 -06:00   node1_clus2      node2-clus1
none
       3/5/2022 19:21:20 -06:00   node1_clus2      node2_clus2
none
node2
       3/5/2022 19:21:18 -06:00   node2_clus2      node1_clus1
none
       3/5/2022 19:21:20 -06:00   node2_clus2      node1_clus2
none
```

All ONTAP releases

For all ONTAP releases, you can also use the `cluster ping-cluster -node <name>` command to check the connectivity:

```
cluster ping-cluster -node <name>
```

```
cluster1::*> cluster ping-cluster -node local
Host is node1
Getting addresses from network interface table...
Cluster node1_clus1 169.254.209.69 node1 e3a
Cluster node1_clus2 169.254.49.125 node1 e3b
Cluster node2_clus1 169.254.47.194 node2 e3a
Cluster node2_clus2 169.254.19.183 node2 e3b
Local = 169.254.47.194 169.254.19.183
Remote = 169.254.209.69 169.254.49.125
Cluster Vserver Id = 4294967293
Ping status:

Basic connectivity succeeds on 4 path(s)
Basic connectivity fails on 0 path(s)

Detected 9000 byte MTU on 4 path(s):
Local 169.254.47.194 to Remote 169.254.209.69
Local 169.254.47.194 to Remote 169.254.49.125
Local 169.254.19.183 to Remote 169.254.209.69
Local 169.254.19.183 to Remote 169.254.49.125
Larger than PMTU communication succeeds on 4 path(s)
RPC status:
2 paths up, 0 paths down (tcp check)
2 paths up, 0 paths down (udp check)
```

8. Change the privilege level back to admin:

```
set -privilege admin
```

9. If you suppressed automatic case creation, reenable it by invoking an AutoSupport message:

```
system node autosupport invoke -node * -type all -message MAINT=END
```

What's next?

After you've migrated your switches, you can configure switch health monitoring.

Replace the switches

Replace a NVIDIA SN2100 cluster switch

Follow this procedure to replace a defective NVIDIA SN2100 switch in a cluster network. This is a nondisruptive procedure (NDU).

Review requirements

Existing cluster and network infrastructure

Ensure that:

- The existing cluster are verified as completely functional, with at least one fully connected cluster switch.
- All cluster ports are up.
- All cluster logical interfaces (LIFs) are up and on their home ports.
- The ONTAP `cluster ping-cluster -node node1` command indicates that basic connectivity and larger than PMTU communication are successful on all paths.

NVIDIA SN2100 replacement switch

Ensure that:

- Management network connectivity on the replacement switch are functional.
- Console access to the replacement switch are in place.
- The node connections are ports swp1 through swp14.
- All Inter-Switch Link (ISL) ports are disabled on ports swp15 and swp16.
- The desired reference configuration file (RCF) and Cumulus operating system image switch are loaded onto the switch.
- Initial customization of the switch is complete.

Also make sure that any previous site customizations, such as STP, SNMP, and SSH, are copied to the new switch.

You must execute the command for migrating a cluster LIF from the node where the cluster LIF is hosted.

Enable console logging

NetApp strongly recommends that you enable console logging on the devices that you are using and take the following actions when replacing your switch:

- Leave AutoSupport enabled during maintenance.
- Trigger a maintenance AutoSupport before and after maintenance to disable case creation for the duration of the maintenance. See this Knowledge Base article SU92: How to suppress automatic case creation during scheduled maintenance windows for further details.
- Enable session logging for any CLI sessions. For instructions on how to enable session logging, review the "Logging Session Output" section in this Knowledge Base article How to configure PuTTY for optimal connectivity to ONTAP systems.

Replace the switch

About the examples

The examples in this procedure use the following switch and node nomenclature:

- The names of the existing NVIDIA SN2100 switches are *sw1* and *sw2*.
- The name of the new NVIDIA SN2100 switch is *nsw2*.
- The node names are *node1* and *node2*.
- The cluster ports on each node are named *e3a* and *e3b*.

- The cluster LIF names are *node1_clus1* and *node1_clus2* for node1, and *node2_clus1* and *node2_clus2* for node2.
- The prompt for changes to all cluster nodes is `cluster1::*>`
- Breakout ports take the format: swp[port]s[breakout port 0-3]. For example, four breakout ports on swp1 are *swp1s0*, *swp1s1*, *swp1s2*, and *swp1s3*.

About the cluster network topology

This procedure is based on the following cluster network topology:

Show example topology

```
cluster1::*> network port show -ipspace Cluster

Node: node1

Ignore
                                                  Speed(Mbps)  Health
Health
Port      IPspace      Broadcast Domain Link MTU  Admin/Oper   Status
Status
--------- ------------ ---------------- ---- ---- ------------ --------
------
e3a       Cluster      Cluster          up   9000  auto/100000 healthy
false
e3b       Cluster      Cluster          up   9000  auto/100000 healthy
false

Node: node2

Ignore
                                                  Speed(Mbps)  Health
Health
Port      IPspace      Broadcast Domain Link MTU  Admin/Oper   Status
Status
--------- ------------ ---------------- ---- ---- ------------ --------
------
e3a       Cluster      Cluster          up   9000  auto/100000 healthy
false
e3b       Cluster      Cluster          up   9000  auto/100000 healthy
false


cluster1::*> network interface show -vserver Cluster

            Logical    Status     Network            Current
Current Is
Vserver     Interface  Admin/Oper Address/Mask       Node          Port
Home
----------- ---------- ---------- ------------------ -------------
------- ----
Cluster
            node1_clus1  up/up    169.254.209.69/16  node1         e3a
true
            node1_clus2  up/up    169.254.49.125/16  node1         e3b
true
```

```
            node2_clus1  up/up    169.254.47.194/16  node2         e3a
true
            node2_clus2  up/up    169.254.19.183/16  node2         e3b
true


cluster1::*> network device-discovery show -protocol lldp
Node/       Local  Discovered
Protocol    Port   Device (LLDP: ChassisID)  Interface     Platform
----------- ------ ------------------------- ------------
----------------
node1      /lldp
            e3a    sw1 (b8:ce:f6:19:1a:7e)   swp3          -
            e3b    sw2 (b8:ce:f6:19:1b:96)   swp3          -
node2      /lldp
            e3a    sw1 (b8:ce:f6:19:1a:7e)   swp4          -
            e3b    sw2 (b8:ce:f6:19:1b:96)   swp4          -
```

+

```
cumulus@sw1:~$ net show lldp

LocalPort  Speed  Mode        RemoteHost         RemotePort
---------  -----  ----------  -----------------  -----------
swp3       100G   Trunk/L2    sw2                e3a
swp4       100G   Trunk/L2    sw2                e3a
swp15      100G   BondMember  sw2                swp15
swp16      100G   BondMember  sw2                swp16


cumulus@sw2:~$ net show lldp

LocalPort  Speed  Mode        RemoteHost         RemotePort
---------  -----  ----------  -----------------  -----------
swp3       100G   Trunk/L2    sw1                e3b
swp4       100G   Trunk/L2    sw1                e3b
swp15      100G   BondMember  sw1                swp15
swp16      100G   BondMember  sw1                swp16
```

Step 1: Prepare for replacement

1. If AutoSupport is enabled on this cluster, suppress automatic case creation by invoking an AutoSupport message:

   ```
   system node autosupport invoke -node * -type all -message MAINT=xh
   ```

where *x* is the duration of the maintenance window in hours.

2. Change the privilege level to advanced, entering **y** when prompted to continue:

   ```
   set -privilege advanced
   ```

   The advanced prompt (*>) appears.

3. Install the appropriate RCF and image on the switch, nsw2, and make any necessary site preparations.

   If necessary, verify, download, and install the appropriate versions of the RCF and Cumulus software for the new switch.

   a. You can download the applicable Cumulus software for your cluster switches from the *NVIDIA Support* site. Follow the steps on the Download page to download the Cumulus Linux for the version of ONTAP software you are installing.

   b. The appropriate RCF is available from the *NVIDIA Cluster and Storage Switches* page. Follow the steps on the Download page to download the correct RCF for the version of ONTAP software you are installing.

Step 2: Configure ports and cabling

Cumulus Linux 4.4.3

1. On the new switch nsw2, log in as admin and shut down all of the ports that will be connected to the node cluster interfaces (ports swp1 to swp14).

   The LIFs on the cluster nodes should have already failed over to the other cluster port for each node.

   ```
   cumulus@nsw2:~$ net add interface swp1s0-3, swp2s0-3, swp3-14 link
   down
   cumulus@nsw2:~$ net pending
   cumulus@nsw2:~$ net commit
   ```

2. Disable auto-revert on the cluster LIFs:

   ```
   network interface modify -vserver Cluster -lif * -auto-revert false
   ```

   ```
   cluster1::*> network interface modify -vserver Cluster -lif * -auto
   -revert false

   Warning: Disabling the auto-revert feature of the cluster logical
   interface may effect the availability of your cluster network. Are
   you sure you want to continue? {y|n}: y
   ```

3. Verify that all cluster LIFs have auto-revert disabled:

   ```
   net interface show -vserver Cluster -fields auto-revert
   ```

4. Shut down the ISL ports swp15 and swp16 on the SN2100 switch sw1.

   ```
   cumulus@sw1:~$ net add interface swp15-16 link down
   cumulus@sw1:~$ net pending
   cumulus@sw1:~$ net commit
   ```

5. Remove all the cables from the SN2100 sw1 switch, and then connect them to the same ports on the SN2100 nsw2 switch.
6. Bring up the ISL ports swp15 and swp16 between the sw1 and nsw2 switches.

   The following commands enable ISL ports swp15 and swp16 on switch sw1:

   ```
   cumulus@sw1:~$ net del interface swp15-16 link down
   cumulus@sw1:~$ net pending
   cumulus@sw1:~$ net commit
   ```

   The following example shows that the ISL ports are up on switch sw1:

```
cumulus@sw1:~$ net show interface

State  Name         Spd   MTU    Mode        LLDP           Summary
-----  -----------  ----  -----  ----------  -------------
----------------------
...
...
UP     swp15        100G  9216   BondMember  nsw2 (swp15)   Master:
cluster_isl(UP)
UP     swp16        100G  9216   BondMember  nsw2 (swp16)   Master:
cluster_isl(UP)
```

The following example shows that the ISL ports are up on switch nsw2:

```
cumulus@nsw2:~$ net show interface

State  Name         Spd   MTU    Mode        LLDP           Summary
-----  -----------  ----  -----  ----------  -------------
----------------------
...
...
UP     swp15        100G  9216   BondMember  sw1 (swp15)    Master:
cluster_isl(UP)
UP     swp16        100G  9216   BondMember  sw1 (swp16)    Master:
cluster_isl(UP)
```

7. Verify that port `e3b` is up on all nodes:

   `network port show -ipspace Cluster`

   The output should be similar to the following:

```
cluster1::*> network port show -ipspace Cluster

Node: node1

Ignore
                                                          Speed(Mbps)
Health   Health
Port      IPspace      Broadcast Domain Link MTU   Admin/Oper
Status   Status
--------- ------------ ---------------- ---- ----- ------------
-------- -------
e3a       Cluster      Cluster          up   9000  auto/100000
healthy  false
e3b       Cluster      Cluster          up   9000  auto/100000
healthy  false


Node: node2

Ignore
                                                          Speed(Mbps)
Health    Health
Port      IPspace      Broadcast Domain Link MTU   Admin/Oper
Status    Status
--------- ------------ ---------------- ---- ----- -----------
--------- -------
e3a       Cluster      Cluster          up   9000  auto/100000
healthy  false
e3b       Cluster      Cluster          up   9000  auto/100000
healthy  false
```

8. The cluster ports on each node are now connected to cluster switches in the following way, from the nodes' perspective:

```
cluster1::*> network device-discovery show -protocol lldp
Node/       Local  Discovered
Protocol    Port   Device (LLDP: ChassisID)  Interface     Platform
----------- ------ ------------------------- ------------
----------------
node1      /lldp
            e3a    sw1  (b8:ce:f6:19:1a:7e)   swp3          -
            e3b    nsw2 (b8:ce:f6:19:1b:b6)   swp3          -
node2      /lldp
            e3a    sw1  (b8:ce:f6:19:1a:7e)   swp4          -
            e3b    nsw2 (b8:ce:f6:19:1b:b6)   swp4          -
```

9. Verify that all node cluster ports are up:

   `net show interface`

```
cumulus@nsw2:~$ net show interface

State  Name         Spd   MTU    Mode        LLDP
Summary
-----  -----------  ----  -----  ----------  -----------------
----------------------
...
...
UP     swp3         100G  9216   Trunk/L2
Master: bridge(UP)
UP     swp4         100G  9216   Trunk/L2
Master: bridge(UP)
UP     swp15        100G  9216   BondMember  sw1 (swp15)
Master: cluster_isl(UP)
UP     swp16        100G  9216   BondMember  sw1 (swp16)
Master: cluster_isl(UP)
```

10. Verify that both nodes each have one connection to each switch:

    `net show lldp`

    The following example shows the appropriate results for both switches:

```
cumulus@sw1:~$ net show lldp

LocalPort  Speed  Mode        RemoteHost         RemotePort
---------  -----  ----------  -----------------  -----------
swp3       100G   Trunk/L2    node1              e3a
swp4       100G   Trunk/L2    node2              e3a
swp15      100G   BondMember  nsw2               swp15
swp16      100G   BondMember  nsw2               swp16


cumulus@nsw2:~$ net show lldp

LocalPort  Speed  Mode        RemoteHost         RemotePort
---------  -----  ----------  -----------------  -----------
swp3       100G   Trunk/L2    node1                e3b
swp4       100G   Trunk/L2    node2                e3b
swp15      100G   BondMember  sw1                swp15
swp16      100G   BondMember  sw1                swp16
```

11. Enable auto-revert on the cluster LIFs:

    ```
    cluster1::*> network interface modify -vserver Cluster -lif * -auto-revert
    true
    ```

12. On switch nsw2, bring up the ports connected to the network ports of the nodes.

    ```
    cumulus@nsw2:~$ net del interface swp1-14 link down
    cumulus@nsw2:~$ net pending
    cumulus@nsw2:~$ net commit
    ```

13. Display information about the nodes in a cluster:

    ```
    cluster show
    ```

    This example shows that the node health for node1 and node2 in this cluster is true:

    ```
    cluster1::*> cluster show

    Node          Health  Eligibility
    ------------- ------- ------------
    node1         true    true
    node2         true    true
    ```

14. Verify that all physical cluster ports are up:

```
network port show ipspace Cluster
```

```
cluster1::*> network port show -ipspace Cluster

Node node1
Ignore
                                                  Speed(Mbps)
Health   Health
Port      IPspace     Broadcast Domain  Link  MTU   Admin/Oper
Status   Status
--------- ----------- ----------------- ----- ----- -----------
-------- ------
e3a       Cluster     Cluster           up    9000  auto/10000
healthy  false
e3b       Cluster     Cluster           up    9000  auto/10000
healthy  false

Node: node2

Ignore
                                                  Speed(Mbps)
Health   Health
Port      IPspace      Broadcast Domain Link  MTU   Admin/Oper
Status   Status
--------- ------------ ---------------- ----- ----- -----------
-------- ------
e3a       Cluster      Cluster          up    9000  auto/10000
healthy  false
e3b       Cluster      Cluster          up    9000  auto/10000
healthy  false
```

Cumulus Linux 5.x

1. On the new switch nsw2, log in as admin and shut down all of the ports that will be connected to the node cluster interfaces (ports swp1 to swp14).

   The LIFs on the cluster nodes should have already failed over to the other cluster port for each node.

   ```
   cumulus@nsw2:~$ nv set interface swp15-16 link state down
   cumulus@nsw2:~$ nv config apply
   ```

2. Disable auto-revert on the cluster LIFs:

   ```
   network interface modify -vserver Cluster -lif * -auto-revert false
   ```

```
cluster1::*> network interface modify -vserver Cluster -lif * -auto
-revert false

Warning: Disabling the auto-revert feature of the cluster logical
interface may effect the availability of your cluster network. Are
you sure you want to continue? {y|n}: y
```

3. Verify that all cluster LIFs have auto-revert disabled:

   ```
   network interface show -vserver Cluster -fields auto-revert
   ```

4. Shut down the ISL ports swp15 and swp16 on the SN2100 switch sw1.

   ```
   cumulus@sw1:~$ nv set interface swp15-16 link state down
   cumulus@sw1:~$ nv config apply
   ```

5. Remove all the cables from the SN2100 sw1 switch, and then connect them to the same ports on the SN2100 nsw2 switch.
6. Bring up the ISL ports swp15 and swp16 between the sw1 and nsw2 switches.

   The following commands enable ISL ports swp15 and swp16 on switch sw1:

   ```
   cumulus@sw1:~$ nv set interface swp15-16 link state down
   cumulus@sw1:~$ nv config apply
   ```

   The following example shows that the ISL ports are up on switch sw1:

   ```
   cumulus@sw1:~$ nv show interface

   State  Name         Spd   MTU    Mode        LLDP            Summary
   -----  -----------  ----  -----  ----------  --------------
   ----------------------
   ...
   ...
   UP     swp15        100G  9216   BondMember  nsw2 (swp15)    Master:
   cluster_isl(UP)
   UP     swp16        100G  9216   BondMember  nsw2 (swp16)    Master:
   cluster_isl(UP)
   ```

   The following example shows that the ISL ports are up on switch nsw2:

```
cumulus@nsw2:~$ nv show interface

State  Name          Spd   MTU    Mode         LLDP            Summary
-----  ------------  ----  -----  ----------  -------------
-----------------------
...
...
UP     swp15         100G  9216   BondMember  sw1 (swp15)     Master:
cluster_isl(UP)
UP     swp16         100G  9216   BondMember  sw1 (swp16)     Master:
cluster_isl(UP)
```

7. Verify that port `e3b` is up on all nodes:

   `network port show -ipspace Cluster`

   The output should be similar to the following:

```
cluster1::*> network port show -ipspace Cluster

Node: node1

Ignore
                                                          Speed(Mbps)
Health   Health
Port      IPspace      Broadcast Domain Link MTU   Admin/Oper
Status   Status
--------- ------------ ---------------- ---- ----- ------------
-------- -------
e3a       Cluster      Cluster          up   9000  auto/100000
healthy  false
e3b       Cluster      Cluster          up   9000  auto/100000
healthy  false


Node: node2

Ignore
                                                          Speed(Mbps)
Health    Health
Port      IPspace      Broadcast Domain Link MTU   Admin/Oper
Status    Status
--------- ------------ ---------------- ---- ----- -----------
--------- -------
e3a       Cluster      Cluster          up   9000  auto/100000
healthy  false
e3b       Cluster      Cluster          up   9000  auto/100000
healthy  false
```

8. The cluster ports on each node are now connected to cluster switches in the following way, from the nodes' perspective:

```
cluster1::*> network device-discovery show -protocol lldp
Node/       Local  Discovered
Protocol    Port   Device (LLDP: ChassisID)  Interface     Platform
----------- ------ ------------------------- ------------
----------------
node1      /lldp
            e3a    sw1  (b8:ce:f6:19:1a:7e)   swp3          -
            e3b    nsw2 (b8:ce:f6:19:1b:b6)   swp3          -
node2      /lldp
            e3a    sw1  (b8:ce:f6:19:1a:7e)   swp4          -
            e3b    nsw2 (b8:ce:f6:19:1b:b6)   swp4          -
```

9. Verify that all node cluster ports are up:

   `nv show interface`

```
cumulus@nsw2:~$ nv show interface

State  Name          Spd   MTU    Mode        LLDP
Summary
-----  ------------  ----  -----  ----------  -----------------
----------------------
...
...
UP     swp3          100G  9216   Trunk/L2
Master: bridge(UP)
UP     swp4          100G  9216   Trunk/L2
Master: bridge(UP)
UP     swp15         100G  9216   BondMember  sw1 (swp15)
Master: cluster_isl(UP)
UP     swp16         100G  9216   BondMember  sw1 (swp16)
Master: cluster_isl(UP)
```

10. Verify that both nodes each have one connection to each switch:

    `nv show interface lldp`

    The following example shows the appropriate results for both switches:

```
cumulus@sw1:~$ nv show interface lldp

LocalPort  Speed  Mode        RemoteHost         RemotePort
---------  -----  ----------  -----------------  -----------
swp3       100G   Trunk/L2    node1              e3a
swp4       100G   Trunk/L2    node2              e3a
swp15      100G   BondMember  nsw2               swp15
swp16      100G   BondMember  nsw2               swp16


cumulus@nsw2:~$ nv show interface lldp

LocalPort  Speed  Mode        RemoteHost         RemotePort
---------  -----  ----------  -----------------  -----------
swp3       100G   Trunk/L2    node1                e3b
swp4       100G   Trunk/L2    node2                e3b
swp15      100G   BondMember  sw1                swp15
swp16      100G   BondMember  sw1                swp16
```

11. Enable auto-revert on the cluster LIFs:

    ```
    cluster1::*> network interface modify -vserver Cluster -lif * -auto-revert
    true
    ```

12. On switch nsw2, bring up the ports connected to the network ports of the nodes.

    ```
    cumulus@nsw2:~$ nv set interface swp1-14 link state up
    cumulus@nsw2:~$ nv config apply
    ```

13. Display information about the nodes in a cluster:

    ```
    cluster show
    ```

    This example shows that the node health for node1 and node2 in this cluster is true:

    ```
    cluster1::*> cluster show

    Node           Health  Eligibility
    -------------- ------- ------------
    node1          true    true
    node2          true    true
    ```

14. Verify that all physical cluster ports are up:

    ```
    network port show ipspace Cluster
    ```

```
cluster1::*> network port show -ipspace Cluster

Node node1
Ignore
                                                        Speed(Mbps)
Health   Health
Port      IPspace     Broadcast Domain  Link  MTU   Admin/Oper
Status   Status
--------- ----------- ----------------- ----- ----- -----------
-------- ------
e3a       Cluster     Cluster           up    9000  auto/10000
healthy  false
e3b       Cluster     Cluster           up    9000  auto/10000
healthy  false

Node: node2

Ignore
                                                        Speed(Mbps)
Health   Health
Port      IPspace      Broadcast Domain Link  MTU   Admin/Oper
Status   Status
--------- ------------ ---------------- ----- ----- -----------
-------- ------
e3a       Cluster      Cluster          up    9000  auto/10000
healthy  false
e3b       Cluster      Cluster          up    9000  auto/10000
healthy  false
```

Step 3: Verify the configuration

Cumulus Linux 4.4.3

1. Verify that the cluster network is healthy.

```
cumulus@sw1:~$ net show lldp

LocalPort  Speed  Mode        RemoteHost      RemotePort
---------  -----  ----------  --------------  -----------
swp3       100G   Trunk/L2    node1           e3a
swp4       100G   Trunk/L2    node2           e3a
swp15      100G   BondMember  nsw2            swp15
swp16      100G   BondMember  nsw2            swp16
```

Cumulus Linux 5.x

1. Verify that the cluster network is healthy.

```
cumulus@sw1:~$ nv show interface lldp

LocalPort  Speed  Mode        RemoteHost      RemotePort
---------  -----  ----------  --------------  -----------
swp3       100G   Trunk/L2    node1           e3a
swp4       100G   Trunk/L2    node2           e3a
swp15      100G   BondMember  nsw2            swp15
swp16      100G   BondMember  nsw2            swp16
```

2. Change the privilege level back to admin:

```
set -privilege admin
```

3. If you suppressed automatic case creation, re-enable it by invoking an AutoSupport message:

```
system node autosupport invoke -node * -type all -message MAINT=END
```

What's next?

After you've replaced your switches, you can configure switch health monitoring.

Replace NVIDIA SN2100 cluster switches with switchless connections

You can migrate from a cluster with a switched cluster network to one where two nodes are directly connected for ONTAP 9.3 and later.

Review requirements

Guidelines

Review the following guidelines:

- Migrating to a two-node switchless cluster configuration is a nondisruptive operation. Most systems have two dedicated cluster interconnect ports on each node, but you can also use this procedure for systems with a larger number of dedicated cluster interconnect ports on each node, such as four, six or eight.
- You cannot use the switchless cluster interconnect feature with more than two nodes.
- If you have an existing two-node cluster that uses cluster interconnect switches and is running ONTAP 9.3 or later, you can replace the switches with direct, back-to-back connections between the nodes.

Before you begin

Make sure you have the following:

- A healthy cluster that consists of two nodes connected by cluster switches. The nodes must be running the same ONTAP release.
- Each node with the required number of dedicated cluster ports, which provide redundant cluster interconnect connections to support your system configuration. For example, there are two redundant ports for a system with two dedicated cluster interconnect ports on each node.

Migrate the switches

About this task

The following procedure removes the cluster switches in a two-node cluster and replaces each connection to the switch with a direct connection to the partner node.

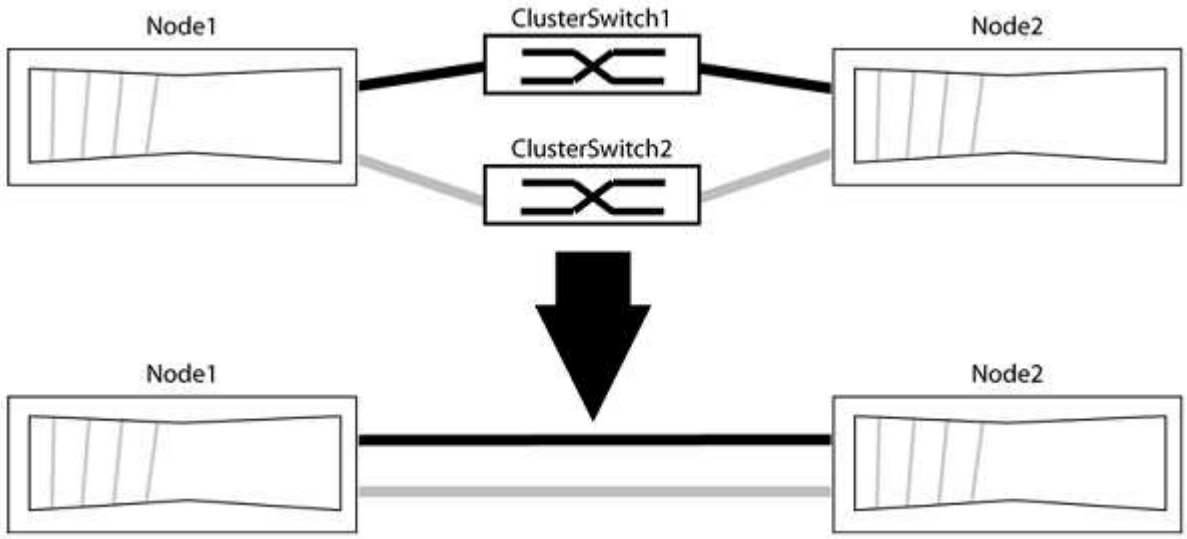

About the examples

The examples in the following procedure show nodes that are using "e0a" and "e0b" as cluster ports. Your nodes might be using different cluster ports as they vary by system.

Step 1: Prepare for migration

1. Change the privilege level to advanced, entering `y` when prompted to continue:

   ```
   set -privilege advanced
   ```

   The advanced prompt `*>` appears.

2. ONTAP 9.3 and later supports automatic detection of switchless clusters, which is enabled by default.

You can verify that detection of switchless clusters is enabled by running the advanced privilege command:

`network options detect-switchless-cluster show`

Show example

The following example output shows if the option is enabled.

```
cluster::*> network options detect-switchless-cluster show
   (network options detect-switchless-cluster show)
Enable Switchless Cluster Detection: true
```

If "Enable Switchless Cluster Detection" is `false`, contact NetApp support.

3. If AutoSupport is enabled on this cluster, suppress automatic case creation by invoking an AutoSupport message:

   `system node autosupport invoke -node * -type all -message MAINT=<number_of_hours>h`

   where `h` is the duration of the maintenance window in hours. The message notifies technical support of this maintenance task so that they can suppress automatic case creation during the maintenance window.

   In the following example, the command suppresses automatic case creation for two hours:

   Show example

   ```
   cluster::*> system node autosupport invoke -node * -type all
   -message MAINT=2h
   ```

Step 2: Configure ports and cabling

1. Organize the cluster ports on each switch into groups so that the cluster ports in group1 go to cluster switch1 and the cluster ports in group2 go to cluster switch2. These groups are required later in the procedure.
2. Identify the cluster ports and verify link status and health:

   `network port show -ipspace Cluster`

   In the following example for nodes with cluster ports "e0a" and "e0b", one group is identified as “node1:e0a” and “node2:e0a” and the other group as “node1:e0b” and “node2:e0b”. Your nodes might be using different cluster ports because they vary by system.

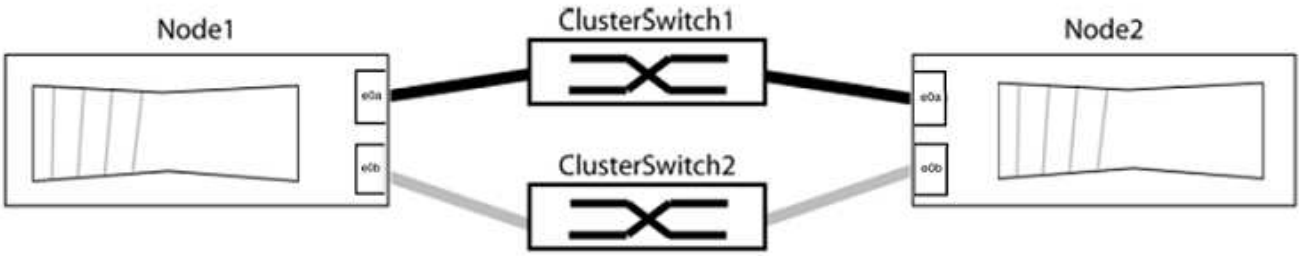

Verify that the ports have a value of `up` for the “Link” column and a value of `healthy` for the “Health Status” column.

Show example

```
cluster::> network port show -ipspace Cluster
Node: node1

Ignore
                                                  Speed(Mbps) Health
Health
Port  IPspace   Broadcast Domain Link  MTU   Admin/Oper  Status
Status
----- --------- ---------------- ----- ----- ----------- -------
-------
e0a   Cluster   Cluster          up    9000  auto/10000  healthy
false
e0b   Cluster   Cluster          up    9000  auto/10000  healthy
false

Node: node2

Ignore
                                                  Speed(Mbps) Health
Health
Port  IPspace   Broadcast Domain Link  MTU   Admin/Oper  Status
Status
----- --------- ---------------- ----- ----- ----------- -------
-------
e0a   Cluster   Cluster          up    9000  auto/10000  healthy
false
e0b   Cluster   Cluster          up    9000  auto/10000  healthy
false
4 entries were displayed.
```

3. Confirm that all the cluster LIFs are on their home ports.

Verify that the “is-home” column is `true` for each of the cluster LIFs:

```
network interface show -vserver Cluster -fields is-home
```

Show example

```
cluster::*> net int show -vserver Cluster -fields is-home
(network interface show)
vserver  lif          is-home
-------- ------------ --------
Cluster  node1_clus1  true
Cluster  node1_clus2  true
Cluster  node2_clus1  true
Cluster  node2_clus2  true
4 entries were displayed.
```

If there are cluster LIFs that are not on their home ports, revert those LIFs to their home ports:

```
network interface revert -vserver Cluster -lif *
```

4. Disable auto-revert for the cluster LIFs:

   ```
   network interface modify -vserver Cluster -lif * -auto-revert false
   ```

5. Verify that all ports listed in the previous step are connected to a network switch:

   ```
   network device-discovery show -port cluster_port
   ```

   The “Discovered Device” column should be the name of the cluster switch that the port is connected to.

Show example

The following example shows that cluster ports "e0a" and "e0b" are correctly connected to cluster switches "cs1" and "cs2".

```
cluster::> network device-discovery show -port e0a|e0b
  (network device-discovery show)
Node/     Local  Discovered
Protocol  Port   Device (LLDP: ChassisID)  Interface  Platform
--------- ------ ------------------------- ---------- ----------
node1/cdp
          e0a    cs1                       0/11       BES-53248
          e0b    cs2                       0/12       BES-53248
node2/cdp
          e0a    cs1                       0/9        BES-53248
          e0b    cs2                       0/9        BES-53248
4 entries were displayed.
```

6. Verify the connectivity of the remote cluster interfaces:

ONTAP 9.9.1 and later

You can use the `network interface check cluster-connectivity` command to start an accessibility check for cluster connectivity and then display the details:

`network interface check cluster-connectivity start` and `network interface check cluster-connectivity show`

```
cluster1::*> network interface check cluster-connectivity start
```

NOTE: Wait for a number of seconds before running the `show` command to display the details.

```
cluster1::*> network interface check cluster-connectivity show
                                  Source           Destination
Packet
Node   Date                       LIF              LIF
Loss
------ -------------------------- ---------------- ----------------
-----------
node1
       3/5/2022 19:21:18 -06:00   node1_clus2      node2-clus1
none
       3/5/2022 19:21:20 -06:00   node1_clus2      node2_clus2
none
node2
       3/5/2022 19:21:18 -06:00   node2_clus2      node1_clus1
none
       3/5/2022 19:21:20 -06:00   node2_clus2      node1_clus2
none
```

All ONTAP releases

For all ONTAP releases, you can also use the `cluster ping-cluster -node <name>` command to check the connectivity:

```
cluster ping-cluster -node <name>
```

```
cluster1::*> cluster ping-cluster -node local
Host is node2
Getting addresses from network interface table...
Cluster node1_clus1 169.254.209.69 node1 e0a
Cluster node1_clus2 169.254.49.125 node1 e0b
Cluster node2_clus1 169.254.47.194 node2 e0a
Cluster node2_clus2 169.254.19.183 node2 e0b
Local = 169.254.47.194 169.254.19.183
Remote = 169.254.209.69 169.254.49.125
Cluster Vserver Id = 4294967293
Ping status:

Basic connectivity succeeds on 4 path(s)
Basic connectivity fails on 0 path(s)

Detected 9000 byte MTU on 4 path(s):
Local 169.254.47.194 to Remote 169.254.209.69
Local 169.254.47.194 to Remote 169.254.49.125
Local 169.254.19.183 to Remote 169.254.209.69
Local 169.254.19.183 to Remote 169.254.49.125
Larger than PMTU communication succeeds on 4 path(s)
RPC status:
2 paths up, 0 paths down (tcp check)
2 paths up, 0 paths down (udp check)
```

7. Verify that the cluster is healthy:

   ```
   cluster ring show
   ```

   All units must be either master or secondary.

8. Set up the switchless configuration for the ports in group 1.

   To avoid potential networking issues, you must disconnect the ports from group1 and reconnect them back-to-back as quickly as possible, for example, **in less than 20 seconds**.

   a. Disconnect all the cables from the ports in group1 at the same time.

      In the following example, the cables are disconnected from port "e0a" on each node, and cluster traffic continues through the switch and port "e0b" on each node:

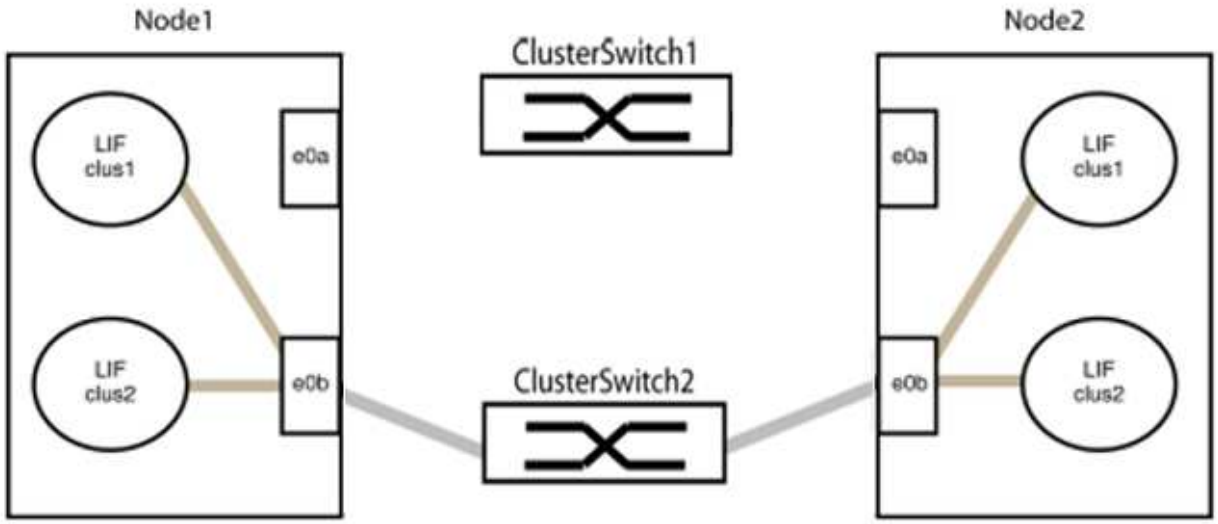

b. Cable the ports in group1 back-to-back.

In the following example, "e0a" on node1 is connected to "e0a" on node2:

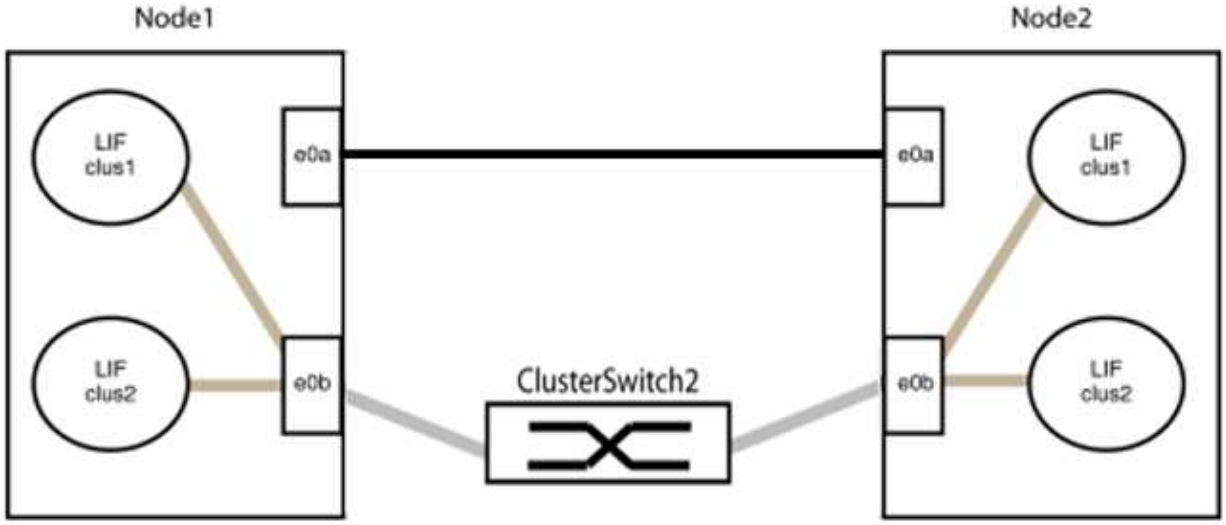

9. The switchless cluster network option transitions from `false` to `true`. This might take up to 45 seconds. Confirm that the switchless option is set to `true`:

```
network options switchless-cluster show
```

The following example shows that the switchless cluster is enabled:

```
cluster::*> network options switchless-cluster show
Enable Switchless Cluster: true
```

10. Verify the connectivity of the remote cluster interfaces:

ONTAP 9.9.1 and later

You can use the `network interface check cluster-connectivity` command to start an accessibility check for cluster connectivity and then display the details:

`network interface check cluster-connectivity start` and `network interface check cluster-connectivity show`

```
cluster1::*> network interface check cluster-connectivity start
```

NOTE: Wait for a number of seconds before running the `show` command to display the details.

```
cluster1::*> network interface check cluster-connectivity show
                                  Source           Destination
Packet
Node   Date                       LIF              LIF
Loss
------ -------------------------- ---------------- ----------------
-----------
node1
       3/5/2022 19:21:18 -06:00   node1_clus2      node2-clus1
none
       3/5/2022 19:21:20 -06:00   node1_clus2      node2_clus2
none
node2
       3/5/2022 19:21:18 -06:00   node2_clus2      node1_clus1
none
       3/5/2022 19:21:20 -06:00   node2_clus2      node1_clus2
none
```

All ONTAP releases

For all ONTAP releases, you can also use the `cluster ping-cluster -node <name>` command to check the connectivity:

```
cluster ping-cluster -node <name>
```

```
cluster1::*> cluster ping-cluster -node local
Host is node2
Getting addresses from network interface table...
Cluster node1_clus1 169.254.209.69 node1 e0a
Cluster node1_clus2 169.254.49.125 node1 e0b
Cluster node2_clus1 169.254.47.194 node2 e0a
Cluster node2_clus2 169.254.19.183 node2 e0b
Local = 169.254.47.194 169.254.19.183
Remote = 169.254.209.69 169.254.49.125
Cluster Vserver Id = 4294967293
Ping status:

Basic connectivity succeeds on 4 path(s)
Basic connectivity fails on 0 path(s)

Detected 9000 byte MTU on 4 path(s):
Local 169.254.47.194 to Remote 169.254.209.69
Local 169.254.47.194 to Remote 169.254.49.125
Local 169.254.19.183 to Remote 169.254.209.69
Local 169.254.19.183 to Remote 169.254.49.125
Larger than PMTU communication succeeds on 4 path(s)
RPC status:
2 paths up, 0 paths down (tcp check)
2 paths up, 0 paths down (udp check)
```

Before proceeding to the next step, you must wait at least two minutes to confirm a working back-to-back connection on group 1.

11. Set up the switchless configuration for the ports in group 2.

To avoid potential networking issues, you must disconnect the ports from group2 and reconnect them back-to-back as quickly as possible, for example, **in less than 20 seconds**.

a. Disconnect all the cables from the ports in group2 at the same time.

In the following example, the cables are disconnected from port "e0b" on each node, and cluster traffic continues through the direct connection between the "e0a" ports:

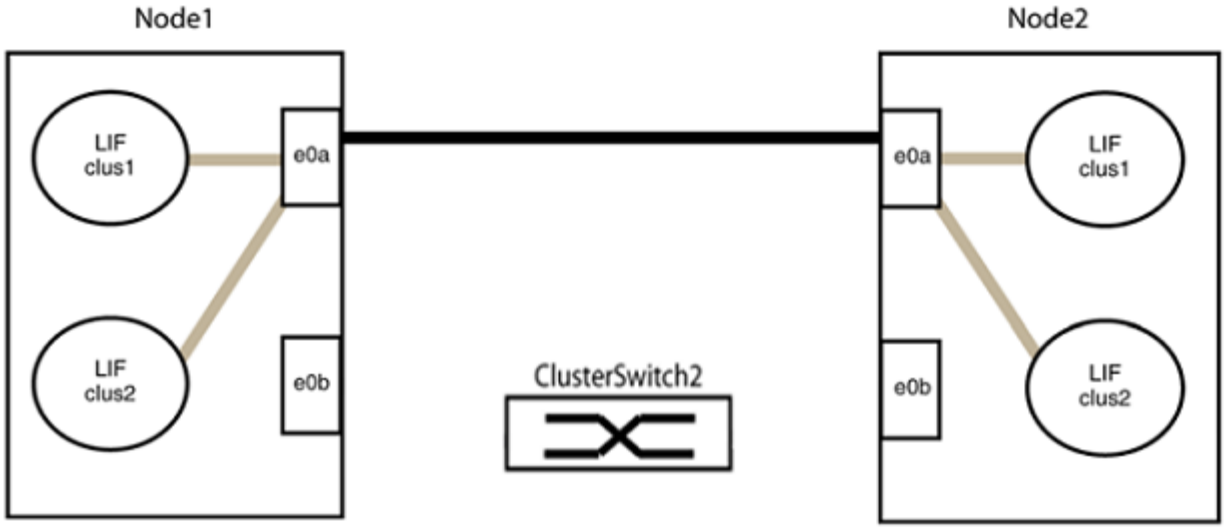

b. Cable the ports in group2 back-to-back.

   In the following example, "e0a" on node1 is connected to "e0a" on node2 and "e0b" on node1 is connected to "e0b" on node2:

Step 3: Verify the configuration

1. Verify that the ports on both nodes are correctly connected:

   `network device-discovery show -port` *`cluster_port`*

Show example

The following example shows that cluster ports "e0a" and "e0b" are correctly connected to the corresponding port on the cluster partner:

```
cluster::> net device-discovery show -port e0a|e0b
  (network device-discovery show)
Node/      Local  Discovered
Protocol   Port   Device (LLDP: ChassisID)  Interface  Platform
---------- ------ ------------------------- ---------- ----------
node1/cdp
           e0a    node2                     e0a        AFF-A300
           e0b    node2                     e0b        AFF-A300
node1/lldp
           e0a    node2 (00:a0:98:da:16:44) e0a        -
           e0b    node2 (00:a0:98:da:16:44) e0b        -
node2/cdp
           e0a    node1                     e0a        AFF-A300
           e0b    node1                     e0b        AFF-A300
node2/lldp
           e0a    node1 (00:a0:98:da:87:49) e0a        -
           e0b    node1 (00:a0:98:da:87:49) e0b        -
8 entries were displayed.
```

2. Re-enable auto-revert for the cluster LIFs:

   `network interface modify -vserver Cluster -lif * -auto-revert true`

3. Verify that all LIFs are home. This might take a few seconds.

   `network interface show -vserver Cluster -lif` *`lif_name`*

Show example

The LIFs have been reverted if the “Is Home” column is `true`, as shown for `node1_clus2` and `node2_clus2` in the following example:

```
cluster::> network interface show -vserver Cluster -fields curr-
port,is-home
vserver  lif           curr-port is-home
-------- ------------- --------- -------
Cluster  node1_clus1   e0a       true
Cluster  node1_clus2   e0b       true
Cluster  node2_clus1   e0a       true
Cluster  node2_clus2   e0b       true
4 entries were displayed.
```

If any cluster LIFS have not returned to their home ports, revert them manually from the local node:

`network interface revert -vserver Cluster -lif` *`lif_name`*

4. Check the cluster status of the nodes from the system console of either node:

   `cluster show`

   Show example

   The following example shows epsilon on both nodes to be `false`:

   ```
   Node  Health  Eligibility Epsilon
   ----- ------- ----------- --------
   node1 true    true        false
   node2 true    true        false
   2 entries were displayed.
   ```

5. Verify the connectivity of the remote cluster interfaces:

ONTAP 9.9.1 and later

You can use the `network interface check cluster-connectivity` command to start an accessibility check for cluster connectivity and then display the details:

`network interface check cluster-connectivity start` and `network interface check cluster-connectivity show`

```
cluster1::*> network interface check cluster-connectivity start
```

NOTE: Wait for a number of seconds before running the `show` command to display the details.

```
cluster1::*> network interface check cluster-connectivity show
                                  Source           Destination
Packet
Node   Date                       LIF              LIF
Loss
------ -------------------------- ---------------- ----------------
-----------
node1
       3/5/2022 19:21:18 -06:00   node1_clus2      node2-clus1
none
       3/5/2022 19:21:20 -06:00   node1_clus2      node2_clus2
none
node2
       3/5/2022 19:21:18 -06:00   node2_clus2      node1_clus1
none
       3/5/2022 19:21:20 -06:00   node2_clus2      node1_clus2
none
```

All ONTAP releases

For all ONTAP releases, you can also use the `cluster ping-cluster -node <name>` command to check the connectivity:

```
cluster ping-cluster -node <name>
```

```
cluster1::*> cluster ping-cluster -node local
Host is node2
Getting addresses from network interface table...
Cluster node1_clus1 169.254.209.69 node1 e0a
Cluster node1_clus2 169.254.49.125 node1 e0b
Cluster node2_clus1 169.254.47.194 node2 e0a
Cluster node2_clus2 169.254.19.183 node2 e0b
Local = 169.254.47.194 169.254.19.183
Remote = 169.254.209.69 169.254.49.125
Cluster Vserver Id = 4294967293
Ping status:

Basic connectivity succeeds on 4 path(s)
Basic connectivity fails on 0 path(s)

Detected 9000 byte MTU on 4 path(s):
Local 169.254.47.194 to Remote 169.254.209.69
Local 169.254.47.194 to Remote 169.254.49.125
Local 169.254.19.183 to Remote 169.254.209.69
Local 169.254.19.183 to Remote 169.254.49.125
Larger than PMTU communication succeeds on 4 path(s)
RPC status:
2 paths up, 0 paths down (tcp check)
2 paths up, 0 paths down (udp check)
```

6. If you suppressed automatic case creation, reenable it by invoking an AutoSupport message:

   ```
   system node autosupport invoke -node * -type all -message MAINT=END
   ```

   For more information, see NetApp KB Article 1010449: How to suppress automatic case creation during scheduled maintenance windows.

7. Change the privilege level back to admin:

   ```
   set -privilege admin
   ```

What's next?

After you've replaced your switches, you can configure switch health monitoring.

Storage switches

Cisco Nexus 9336C-FX2 or 9336C-FX2-T

Get started

Installation and setup workflow for Cisco Nexus 9336C-FX2 9336C-FX2-T storage switches

The Cisco Nexus 9336C-FX2 and 9336C-FX2-T switches are part of the Cisco Nexus 9000 platform and can be installed in a NetApp system cabinet.

Cisco Nexus 9336C-FX2 (36 ports) is high-port density cluster/storage/data switch. Cisco Nexus 9336C-FX2-T (12 ports) is a low-port-density, high performance switch that supports 10/25/40/100GbE configurations.

Follow these workflow steps to install and setup your to Cisco 9336C-FX2 and 9336C-FX2-T switches.

Review the configuration requirements

Review the configuration requirements for the 9336C-FX2 and 9336C-FX2-T storage switches.

Review the components and part numbers

Review the components and part numbers for the 9336C-FX2 and 9336C-FX2-T storage switches.

Review the required documentation

Review specific switch and controller documentation to set up your 9336C-FX2 and 9336C-FX2-T switches and the ONTAP cluster.

Review the Smart Call Home requirements

Review the requirements for the Cisco Smart Call Home feature, used to monitor the hardware and software components on your network.

Install the hardware

Install the switch hardware.

Configure the software

Configure the switch software.

Configuration requirements for Cisco Nexus 9336C-FX2 and 9336C-FX2-T storage switches

For Cisco Nexus 9336C-FX2 and 9336C-FX2-T switches installation and maintenance, make sure to review configuration and network requirements.

ONTAP support

ONTAP 9.9.1 and later

From ONTAP 9.9.1, you can use Cisco Nexus 9336C-FX2 switches to combine storage and cluster functionality into a shared switch configuration.

If you want to build ONTAP clusters with more than two nodes, you need two supported network switches.

> Ethernet switch health monitor does not support ONTAP 9.13.1P8 and earlier and 9.14.1P3 and earlier or NX-OS version 10.3(4a)(M).

ONTAP 9.10.1 and later

In addition, beginning with ONTAP 9.10.1, you can use Cisco Nexus 9336C-FX2-T switches to combine storage and cluster functionality into a shared switch configuration.

If you want to build ONTAP clusters with more than two nodes, you need two supported network switches.

Configuration requirements

For configuration, you need the appropriate number and type of cables and cable connectors for your switches.

Depending on the type of switch you are initially configuring, you need to connect to the switch console port with the included console cable; you also need to provide specific network information.

Network requirements

You need the following network information for all switch configurations.

- IP subnet for management network traffic
- Host names and IP addresses for each of the storage system controllers and all applicable switches
- Most storage system controllers are managed through the e0M interface by connecting to the Ethernet service port (wrench icon). On AFF A800 and AFF A700s systems, the e0M interface uses a dedicated Ethernet port.
- Refer to the Hardware Universe for the latest information.

For more information about the initial configuration of your switch, see the following guide: Cisco Nexus 9336C-FX2 Installation and Upgrade Guide.

What's next

After you've reviewed the configuration requirements, you can confirm your components and part numbers.

Components and part numbers for Cisco Nexus 9336C-FX2 and 9336C-FX2-T storage switches

For Cisco Nexus 9336C-FX2 and 9336C-FX2-T storage switch installation and maintenance, be sure to review the list of components and part numbers.

The following table lists the part number and description for the 9336C-FX2 and 9336C-FX2-T storage switches, fans, and power supplies:

Part number	Description
X190200-CS-PE	Cluster Switch, N9336C 36Pt PTSX 10/25/40/100G
X190200-CS-PI	Cluster Switch, N9336C 36Pt PSIN 10/25/40/100G
X190212-CS-PE	Cluster Switch, N9336C 12Pt (9336C-FX2-T) PTSX 10/25/40/100G
X190212-CS-PI	Cluster Switch, N9336C 12Pt (9336C-FX2-T) PSIN 10/25/40/100G
SW-N9K-FX2-24P-UPG	SW, Cisco 9336CFX2 24-Port POD License
X190210-FE-PE	N9K-9336C, FTE, PTSX, 36PT 10/25/40/100GQSFP28
X190210-FE-PI	N9K-9336C, FTE, PSIN, 36PT 10/25/40/100GQSFP28
X190002	Accessory Kit X190001/X190003
X-NXA-PAC-1100W-PE2	N9K-9336C AC 1100W PSU - Port side exhaust airflow
X-NXA-PAC-1100W-PI2	N9K-9336C AC 1100W PSU - Port side Intake airflow
X-NXA-FAN-65CFM-PE	N9K-9336C 65CFM, Port side exhaust airflow
X-NXA-FAN-65CFM-PI	N9K-9336C 65CFM, Port side intake airflow

Cisco Smart licenses for 9336C-FX2-T ports only

In order to activate more than 12 ports on your Cisco Nexus 9336C-FX-T storage switch, you must purchase a Cisco Smart license. Cisco Smart licenses are managed through Cisco Smart accounts.

1. Create a new Smart account, if required. See Create a new Smart account for details.
2. Request access to an existing Smart account. See Request access to an existing Smart account for details.

> Once you have purchased your Smart license, install the appropriate RCF to enable and configure all 36 available ports for use.

What's next

After you've confirmed your components and part numbers, you can review the required documentation.

Documentation requirements for Cisco Nexus 9336C-FX2 and 9336C-FX2-T storage switches

For Cisco Nexus 9336C-FX2 and 9336C-FX2-T switch installation and maintenance, make sure to review specific switch and controller documentation to set up your Cisco 9336-FX2 switches and ONTAP cluster.

Switch documentation

To set up the Cisco Nexus 9336C-FX2 switches, you need the following documentation from the Cisco Nexus 9000 Series Switches Support page:

Document title	Description
Nexus 9000 Series Hardware Installation Guide	Provides detailed information about site requirements, switch hardware details, and installation options.
Cisco Nexus 9000 Series Switch Software Configuration Guides (choose the guide for the NX-OS release installed on your switches)	Provides initial switch configuration information that you need before you can configure the switch for ONTAP operation.
Cisco Nexus 9000 Series NX-OS Software Upgrade and Downgrade Guide (choose the guide for the NX-OS release installed on your switches)	Provides information on how to downgrade the switch to ONTAP supported switch software, if necessary.
Cisco Nexus 9000 Series NX-OS Command Reference Master Index	Provides links to the various command references provided by Cisco.
Cisco Nexus 9000 MIBs Reference	Describes the Management Information Base (MIB) files for the Nexus 9000 switches.
Nexus 9000 Series NX-OS System Message Reference	Describes the system messages for Cisco Nexus 9000 series switches, those that are informational, and others that might help diagnose problems with links, internal hardware, or the system software.
Cisco Nexus 9000 Series NX-OS Release Notes (choose the notes for the NX-OS release installed on your switches)	Describes the features, bugs, and limitations for the Cisco Nexus 9000 Series.
Regulatory Compliance and Safety Information for Cisco Nexus 9000 Series	Provides international agency compliance, safety, and statutory information for the Nexus 9000 series switches.

ONTAP systems documentation

To set up an ONTAP system, you need the following documents for your version of the operating system from ONTAP 9.

Name	Description
Controller-specific *Installation and Setup Instructions*	Describes how to install NetApp hardware.

Name	Description
ONTAP documentation	Provides detailed information about all aspects of the ONTAP releases.
Hardware Universe	Provides NetApp hardware configuration and compatibility information.

Rail kit and cabinet documentation

To install a Cisco 9336-FX2 switch in a NetApp cabinet, see the following hardware documentation.

Name	Description
42U System Cabinet, Deep Guide	Describes the FRUs associated with the 42U system cabinet, and provides maintenance and FRU replacement instructions.
Install a Cisco 9336-FX2 switch in a NetApp Cabinet	Describes how to install a Cisco Nexus 9336C-FX2 switch in a four-post NetApp cabinet.

Smart Call Home requirements

To use Smart Call Home, you must configure a cluster network switch to communicate using email with the Smart Call Home system. In addition, you can optionally set up your cluster network switch to take advantage of Cisco's embedded Smart Call Home support feature.

Smart Call Home monitors the hardware and software components on your network. When a critical system configuration occurs, it generates an email-based notification and raises an alert to all the recipients that are configured in your destination profile.

Smart Call Home monitors the hardware and software components on your network. When a critical system configuration occurs, it generates an email-based notification and raises an alert to all the recipients that are configured in your destination profile.

Before you can use Smart Call Home, be aware of the following requirements:

- An email server must be in place.
- The switch must have IP connectivity to the email server.
- The contact name (SNMP server contact), phone number, and street address information must be configured. This is required to determine the origin of messages received.
- A CCO ID must be associated with an appropriate Cisco SMARTnet Service contract for your company.
- Cisco SMARTnet Service must be in place for the device to be registered.

The Cisco support site contains information about the commands to configure Smart Call Home.

Install the hardware

Hardware install workflow for Cisco Nexus 9336C-FX2 and 9336C-FX2-T storage switches

To install and configure the hardware for 9336C-FX2 and 9336C-FX2-T storage switches,

follow these steps:

1. **Complete the cabling worksheet**

The sample cabling worksheet provides examples of recommended port assignments from the switches to the controllers. The blank worksheet provides a template that you can use in setting up your cluster.

2. **Install the switch**

Install the 9336C-FX2 and 9336C-FX2-T storage switches.

3. **Install the switch in a NetApp cabinet**

Install the 9336C-FX2 and 9336C-FX2-T switches and pass-through panel in a NetApp cabinet as required.

Complete the Cisco Nexus 9336C-FX2 or 9336C-FX2-T cabling worksheet

If you want to document the supported platforms, download a PDF of this page and complete the cabling worksheet.

The sample cabling worksheet provides examples of recommended port assignments from the switches to the controllers. The blank worksheet provides a template that you can use in setting up your cluster.

- 9336C-FX2 sample cabling worksheet
- 9336C-FX2 blank cabling worksheet
- 9336C-FX2-T sample cabling worksheet (12-port)
- 9336C-FX2-T blank cabling worksheet (12-port)

9336C-FX2 sample cabling worksheet

The sample port definition on each pair of switches is as follows:

Cluster switch A		Cluster switch B	
Switch port	Node and port usage	Switch port	Node and port usage
1	4x100GbE node 1	1	4x100GbE node 1
2	4x100GbE node 2	2	4x100GbE node 2
3	4x100GbE node 3	3	4x100GbE node 3
4	4x100GbE node 4	4	4x100GbE node 4
5	4x100GbE node 5	5	4x100GbE node 5
6	4x100GbE node 6	6	4x100GbE node 6

Cluster switch A		Cluster switch B	
7	4x100GbE node 7	7	4x100GbE node 7
8	4x100GbE node 8	8	4x100GbE node 8
9	4x100GbE node 9	9	4x100GbE node 9
10	4x100GbE node 10	10	4x100GbE node 10
11	4x100GbE node 11	11	4x100GbE node 11
12	4x100GbE node 12	12	4x100GbE node 12
13	4x100GbE node 13	13	4x100GbE node 13
14	4x100GbE node 14	14	4x100GbE node 14
15	4x100GbE node 15	15	4x100GbE node 15
16	4x100GbE node 16	16	4x100GbE node 16
17	4x100GbE node 17	17	4x100GbE node 17
18	4x100GbE node 18	18	4x100GbE node 18
19	4x100GbE node 19	19	4x100GbE node 19
20	4x100GbE node 20	20	4x100GbE node 20
21	4x100GbE node 21	21	4x100GbE node 21
22	4x100GbE node 22	22	4x100GbE node 22
23	4x100GbE node 23	23	4x100GbE node 23
24	4x100GbE node 24	24	4x100GbE node 24
25	4x100GbE node 25	25	4x100GbE node 25
26	4x100GbE node 26	26	4x100GbE node 26
27	4x100GbE node 27	27	4x100GbE node 27
28	4x100GbE node 28	28	4x100GbE node 28

Cluster switch A		Cluster switch B	
29	4x100GbE node 29	29	4x100GbE node 29
30	4x100GbE node 30	30	4x100GbE node 30
31	4x100GbE node 31	31	4x100GbE node 31
32	4x100GbE node 32	32	4x100GbE node 32
33	4x100GbE node 33	33	4x100GbE node 33
30	4x100GbE node 30	30	4x100GbE node 33
34	4x100GbE node 34	34	4x100GbE node 34
35	4x100GbE node 35	35	4x100GbE node 35
36	4x100GbE node 36	36	4x100GbE node 36

9336C-FX2 blank cabling worksheet

You can use the blank cabling worksheet to document the platforms that are supported as nodes in a cluster. The *Supported Cluster Connections* section of the Hardware Universe defines the cluster ports used by the platform.

Cluster switch A		Cluster switch B	
1		1	
2		2	
3		3	
4		4	
5		5	
6		6	
7		7	
8		8	
9		9	

Cluster switch A		Cluster switch B	
10		10	
11		11	
12		12	
13		13	
14		14	
15		15	
16		16	
17		17	
18		18	
19		19	
20		20	
21		21	
22		22	
23		23	
24		24	
25		25	
26		26	
27		27	
28		28	
29		29	
30		30	
31		31	

Cluster switch A		Cluster switch B	
32		32	
33		33	
34		34	
35		35	
36		36	

9336C-FX2-T sample cabling worksheet (12-port)

The sample port definition on each pair of switches is as follows:

Cluster switch A		Cluster switch B	
Switch port	Node and port usage	Switch port	Node and port usage
1	4x100GbE node 1	1	4x100GbE node 1
2	4x100GbE node 2	2	4x100GbE node 2
3	4x100GbE node 3	3	4x100GbE node 3
4	4x100GbE node 4	4	4x100GbE node 4
5	4x100GbE node 5	5	4x100GbE node 5
6	4x100GbE node 6	6	4x100GbE node 6
7	4x100GbE node 7	7	4x100GbE node 7
8	4x100GbE node 8	8	4x100GbE node 8
9	4x100GbE node 9	9	4x100GbE node 9
10	4x100GbE node 10	10	4x100GbE node 10
11 though 36	Requires license	11 through 36	Requires license

9336C-FX2-T blank cabling worksheet (12-port)

You can use the blank cabling worksheet to document the platforms that are supported as nodes in a cluster.

Cluster switch A		Cluster switch B	
1		1	
2		2	
3		3	
4		4	
5		5	
6		6	
7		7	
8		8	
9		9	
10		10	
11 through 36	Requires license	11 through 36	Requires license

See the Hardware Universe for more information on switch ports.

What's next

After you've completed your cabling worksheets, you can install the switch.

Install the 9336C-FX2 and 9336C-FX2-T storage switches

Follow this procedure to install Cisco Nexus 9336C-FX2 and 9336C-FX2-T storage switches.

Before you begin

Make sure you have the following:

- Access to an HTTP, FTP or TFTP server at the installation site to download the applicable NX-OS and reference configuration file (RCF) releases.
- Applicable NX-OS version, downloaded from the Cisco Software Download page.
- Applicable licenses, network and configuration information, and cables.
- Completed cabling worksheets.
- Applicable NetApp cluster network and management network RCFs downloaded from the NetApp Support Site at mysupport.netapp.com. All Cisco cluster network and management network switches arrive with the standard Cisco factory-default configuration. These switches also have the current version of the NX-OS software but do not have the RCFs loaded.

- Required switch documentation. See Required documentation for more information.

Steps

1. Rack the cluster network and management network switches and controllers.

If you are installing your…	Then…
Cisco Nexus 9336C-FX2 in a NetApp system cabinet	See Install switch in NetApp cabinet for instructions to install the switch in a NetApp cabinet.
Equipment in a Telco rack	See the procedures provided in the switch hardware installation guides and the NetApp installation and setup instructions.

2. Cable the cluster network and management network switches to the controllers using the completed cabling worksheets.
3. Power on the cluster network and management network switches and controllers.

What's next?

Optionally, you can install a Cisco Nexus 9336C-FX2 switch in a NetApp cabinet. Otherwise, go to configure the switch.

Install Cisco Nexus 9336C-FX2 and 9336C-FX2-T switches in a NetApp cabinet

Depending on your configuration, you might need to install the Cisco Nexus 9336C-FX2 9336C-FX2-T switches and pass-through panel in a NetApp cabinet. Standard brackets are included with the switch.

Before you begin

Make sure you have the following:

- For each switch, you must supply the eight 10-32 or 12-24 screws and clip nuts to mount the brackets and slider rails to the front and rear cabinet posts.
- You must use the Cisco standard rail kit to install the switch in a NetApp cabinet.

The jumper cords are not included with the pass-through kit and should be included with your switches. If they were not shipped with the switches, you can order them from NetApp (part number X1558A-R6).

Required documentation

Review the initial preparation requirements, kit contents, and safety precautions in the Cisco Nexus 9000 Series Hardware Installation Guide.

Steps

1. Install the pass-through blanking panel in the NetApp cabinet.

   The pass-through panel kit is available from NetApp (part number X8784-R6).

   The NetApp pass-through panel kit contains the following hardware:

   - One pass-through blanking panel

- Four 10-32 x .75 screws
- Four 10-32 clip nuts

a. Determine the vertical location of the switches and blanking panel in the cabinet.

   In this procedure, the blanking panel will be installed in U40.

b. Install two clip nuts on each side in the appropriate square holes for front cabinet rails.

c. Center the panel vertically to prevent intrusion into adjacent rack space, and then tighten the screws.

d. Insert the female connectors of both 48-inch jumper cords from the rear of the panel and through the brush assembly.

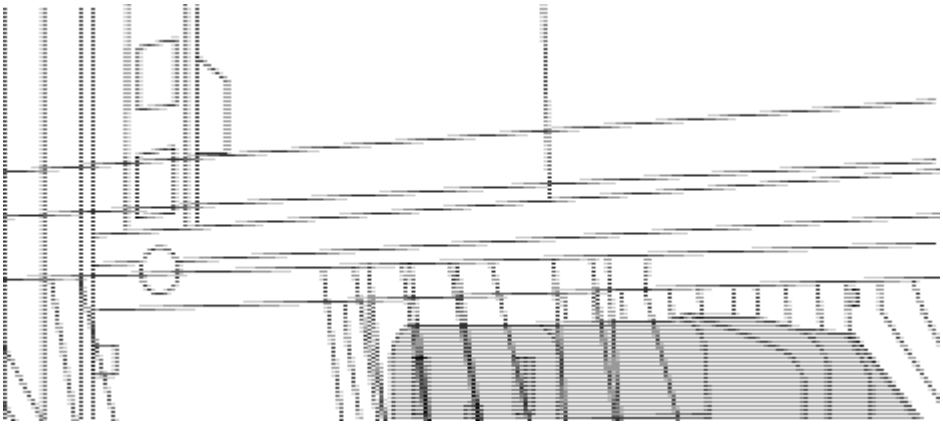

(1) Female connector of the jumper cord.

2. Install the rack-mount brackets on the Nexus 9336C-FX2 switch chassis.

a. Position a front rack-mount bracket on one side of the switch chassis so that the mounting ear is aligned with the chassis faceplate (on the PSU or fan side), and then use four M4 screws to attach the bracket to the chassis.

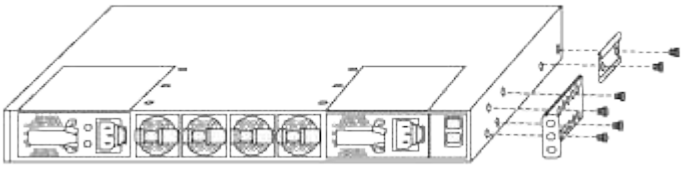

b. Repeat step 2a with the other front rack-mount bracket on the other side of the switch.

c. Install the rear rack-mount bracket on the switch chassis.

d. Repeat step 2c with the other rear rack-mount bracket on the other side of the switch.

3. Install the clip nuts in the square hole locations for all four IEA posts.

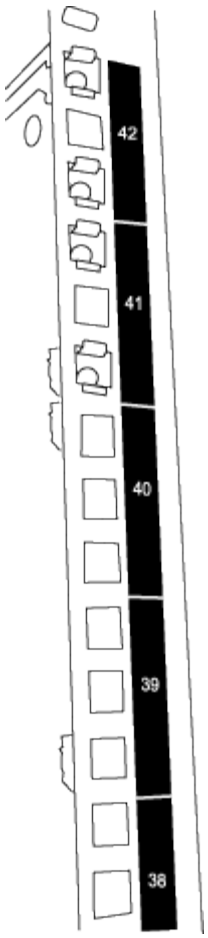

The two 9336C-FX2 switches will always be mounted in the top 2U of the cabinet RU41 and 42.

4. Install the slider rails in the cabinet.
   a. Position the first slider rail at the RU42 mark on the back side of the rear left post, insert screws with the matching thread type, and then tighten the screws with your fingers.

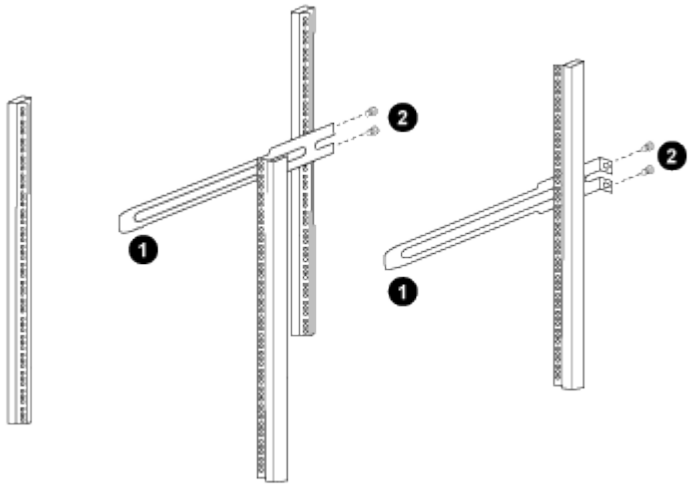

(1) As you gently slide the slider rail, align it to the screw holes in the rack.

(2) Tighten the screws of the slider rails to the cabinet posts.

   b. Repeat step 4a for the right side rear post.

c. Repeat steps 4a and 4b at the RU41 locations on the cabinet.

5. Install the switch in the cabinet.

> This step requires two people: one person to support the switch from the front and another to guide the switch into the rear slider rails.

a. Position the back of the switch at RU41.

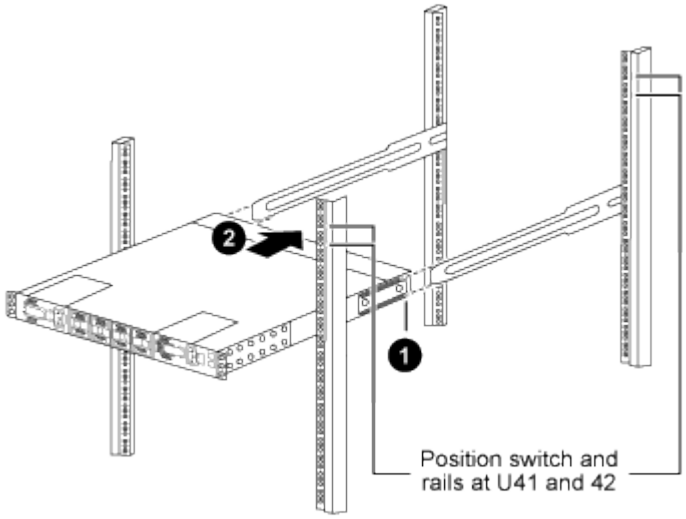

(1) As the chassis is pushed toward the rear posts, align the two rear rack-mount guides with the slider rails.

(2) Gently slide the switch until the front rack-mount brackets are flush with the front posts.

b. Attach the switch to the cabinet.

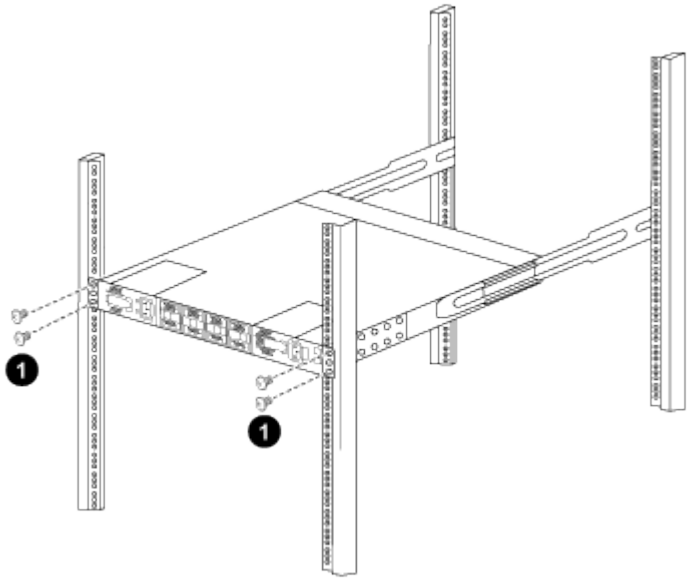

(1) With one person holding the front of the chassis level, the other person should fully tighten the four rear screws to the cabinet posts.

c. With the chassis now supported without assistance, fully tighten the front screws to the posts.

d. Repeat steps 5a through 5c for the second switch at the RU42 location.

> By using the fully installed switch as a support, it is not necessary to hold the front of the second switch during the installation process.

6. When the switches are installed, connect the jumper cords to the switch power inlets.
7. Connect the male plugs of both jumper cords to the closest available PDU outlets.

> To maintain redundancy, the two cords must be connected to different PDUs.

8. Connect the management port on each 9336C-FX2 switch to either of the management switches (if ordered) or connect them directly to your management network.

   The management port is the upper-right port located on the PSU side of the switch. The CAT6 cable for each switch needs to be routed through the pass-through panel after the switches are installed to connect to the management switches or management network.

What's next

After you've installed the switches in the NetApp cabinet, you can configure the Cisco Nexus 9336C-FX2 and 9336C-FX2-T switches.

Configure the software

Software install workflow for Cisco Nexus 9336C-FX2 and 9336C-FX2-T storage switches

To install and configure software for Cisco Nexus 9336C-FX2 and 9336C-FX2-T storage switches, follow these steps:

1. **Configure the switch**

Configure the 9336C-FX2 and 9336C-FX2-T storage switches.

2. **Prepare to install the NX-OS software and RCF**

The Cisco NX-OS software and reference configuration files (RCFs) must be installed on Cisco 9336C-FX2 and 9336C-FX2-T storage switches.

3. **Install or upgrade the NX-OS software**

Download and install or upgrade the NX-OS software on the Cisco 9336C-FX2 and 9336C-FX2-T storage switches.

4. **Install or upgrade the RCF**

Install or upgrade the RCF after setting up the Cisco 9336C-FX2 and 9336C-FX2-T switches for the first time. You can also use this procedure to upgrade your RCF version.

5 Verify SSH configuration

Verify that SSH is enabled on the switches to use the Ethernet Switch Health Monitor (CSHM) and log collection features.

6 Reset the switch to factory defaults

Erase the 9336C-FX2 and 9336C-FX2-T storage switches settings.

Configure the 9336C-FX2 and 9336C-FX2-T storage switches

Follow this procedure to configure the Cisco Nexus 9336C-FX2 and 9336C-FX2-T switches.

Before you begin

Make sure you have the following:

- Access to an HTTP, FTP or TFTP server at the installation site to download the applicable NX-OS and reference configuration file (RCF) releases.
- Applicable NX-OS version, downloaded from the Cisco software download page.
- Applicable licenses, network and configuration information, and cables.
- Completed cabling worksheets.
- Applicable NetApp cluster network and management network RCFs downloaded from the NetApp Support Site at mysupport.netapp.com. All Cisco cluster network and management network switches arrive with the standard Cisco factory-default configuration. These switches also have the current version of the NX-OS software but do not have the RCFs loaded.
- Required switch documentation. See Required documentation for more information.

Steps

1. Perform an initial configuration of the cluster network switches.

   Provide applicable responses to the following initial setup questions when you first boot the switch. Your site's security policy defines the responses and services to enable.

Prompt	Response
Abort Auto Provisioning and continue with normal setup? (yes/no)	Respond with **yes**. The default is no.
Do you want to enforce secure password standard? (yes/no)	Respond with **yes**. The default is yes.
Enter the password for admin.	The default password is "admin"; you must create a new, strong password. A weak password can be rejected.

Prompt	Response
Would you like to enter the basic configuration dialog? (yes/no)	Respond with **yes** at the initial configuration of the switch.
Create another login account? (yes/no)	Your answer depends on your site's policies on alternate administrators. The default is **no**.
Configure read-only SNMP community string? (yes/no)	Respond with **no**. The default is no.
Configure read-write SNMP community string? (yes/no)	Respond with **no**. The default is no.
Enter the switch name.	The switch name is limited to 63 alphanumeric characters.
Continue with Out-of-band (mgmt0) management configuration? (yes/no)	Respond with **yes** (the default) at that prompt. At the mgmt0 IPv4 address: prompt, enter your IP address: ip_address.
Configure the default-gateway? (yes/no)	Respond with **yes**. At the IPv4 address of the default-gateway: prompt, enter your default_gateway.
Configure advanced IP options? (yes/no)	Respond with **no**. The default is no.
Enable the telnet service? (yes/no)	Respond with **no**. The default is no.
Enabled SSH service? (yes/no)	Respond with **yes**. The default is yes. SSH is recommended when using Ethernet Switch Health Monitor (CSHM) for its log collection features. SSHv2 is also recommended for enhanced security.
Enter the type of SSH key you want to generate (dsa/rsa/rsa1).	The default is **rsa**.
Enter the number of key bits (1024-2048).	Enter the number of key bits from 1024 to 2048.
Configure the NTP server? (yes/no)	Respond with **no**. The default is no.
Configure default interface layer (L3/L2)	Respond with **L2**. The default is L2.

Prompt	Response
Configure default switch port interface state (shut/noshut)	Respond with **noshut**. The default is noshut.
Configure CoPP system profile (strict/moderate/lenient/dense)	Respond with **strict**. The default is strict.
Would you like to edit the configuration? (yes/no)	You should see the new configuration at this point. Review and make any necessary changes to the configuration you just entered. Respond with **no** at the prompt if you are satisfied with the configuration. Respond with **yes** if you want to edit your configuration settings.
Use this configuration and save it? (yes/no)	Respond with **yes** to save the configuration. This automatically updates the kickstart and system images. If you do not save the configuration at this stage, none of the changes will be in effect the next time you reboot the switch.

2. Verify the configuration choices you made in the display that appears at the end of the setup, and make sure that you save the configuration.
3. Check the version on the cluster network switches, and if necessary, download the NetApp-supported version of the software to the switches from the Cisco software download page.

What's next?

After you've configured your switches, you can prepare to install the NX-OS software and RCF.

Prepare to install or upgrade NX-OS software and RCF

Before you install the NX-OS software and the Reference Configuration File (RCF), follow this procedure.

About the examples

The examples in this procedure use the following switch and node nomenclature:

- The names of the two Cisco switches are cs1 and cs2.
- The node names are cluster1-01 and cluster1-02.
- The cluster LIF names are cluster1-01_clus1 and cluster1-01_clus2 for cluster1-01 and cluster1-02_clus1 and cluster1-02_clus2 for cluster1-02.
- The `cluster1::*>` prompt indicates the name of the cluster.

About this task

The procedure requires the use of both ONTAP commands and Cisco Nexus 9000 Series Switches commands; ONTAP commands are used unless otherwise indicated.

Steps

1. If AutoSupport is enabled on this cluster, suppress automatic case creation by invoking an AutoSupport message: `system node autosupport invoke -node * -type all -message MAINT=x h`

   where x is the duration of the maintenance window in hours.

   > The AutoSupport message notifies technical support of this maintenance task so that automatic case creation is suppressed during the maintenance window.

2. Change the privilege level to advanced, entering **y** when prompted to continue:

   ```
   set -privilege advanced
   ```

   The advanced prompt (`*>`) appears.

3. Display how many cluster interconnect interfaces are configured in each node for each cluster interconnect switch:

   ```
   network device-discovery show -protocol lldp
   ```

   Show example

   ```
   cluster1::*> network device-discovery show -protocol lldp

   Node/       Local  Discovered
   Protocol    Port   Device (LLDP: ChassisID)  Interface
   Platform
   ----------- ------ ------------------------- -----------------
   --------
   cluster1-02/lldp
               e0a    cs1                       Eth1/2            N9K-
   C9336C
               e0b    cs2                       Eth1/2            N9K-
   C9336C
   cluster1-01/lldp
               e0a    cs1                       Eth1/1            N9K-
   C9336C
               e0b    cs2                       Eth1/1            N9K-
   C9336C

   4 entries were displayed.
   ```

4. Check the administrative or operational status of each cluster interface.

   a. Display the network port attributes:

```
network port show -ipspace Cluster
```

Show example

```
cluster1::*> network port show -ipspace Cluster

Node: cluster1-02

Ignore
                                                  Speed(Mbps)
Health  Health
Port      IPspace      Broadcast Domain Link MTU  Admin/Oper
Status  Status
--------- ------------ ---------------- ---- ---- ------------
------- ------
e0a       Cluster      Cluster          up   9000  auto/100000
healthy false
e0b       Cluster      Cluster          up   9000  auto/100000
healthy false

Node: cluster1-01

Ignore
                                                  Speed(Mbps)
Health  Health
Port      IPspace      Broadcast Domain Link MTU  Admin/Oper
Status  Status
--------- ------------ ---------------- ---- ---- ------------
------- ------
e0a       Cluster      Cluster          up   9000  auto/100000
healthy false
e0b       Cluster      Cluster          up   9000  auto/100000
healthy false

4 entries were displayed.
```

b. Display information about the LIFs:

```
network interface show -vserver Cluster
```

Show example

```
cluster1::*> network interface show -vserver Cluster

            Logical            Status     Network
Current       Current Is
Vserver     Interface          Admin/Oper Address/Mask       Node
Port    Home
----------- ------------------ ---------- ------------------
------------ ------- ----
Cluster
            cluster1-01_clus1  up/up      169.254.209.69/16
cluster1-01   e0a     true
            cluster1-01_clus2  up/up      169.254.49.125/16
cluster1-01   e0b     true
            cluster1-02_clus1  up/up      169.254.47.194/16
cluster1-02   e0a     true
            cluster1-02_clus2  up/up      169.254.19.183/16
cluster1-02   e0b     true

4 entries were displayed.
```

5. Verify the connectivity of the remote cluster interfaces:

ONTAP 9.9.1 and later

You can use the `network interface check cluster-connectivity` command to start an accessibility check for cluster connectivity and then display the details:

`network interface check cluster-connectivity start` and `network interface check cluster-connectivity show`

```
cluster1::*> network interface check cluster-connectivity start
```

NOTE: Wait for a number of seconds before running the `show` command to display the details.

```
cluster1::*> network interface check cluster-connectivity show
                                  Source               Destination
Packet
Node   Date                       LIF                  LIF
Loss
------ -------------------------- -------------------
------------------ -----------
node1
       3/5/2024 19:21:18 -06:00   cluster1-01_clus2    cluster1-02-
clus1   none
       3/5/2024 19:21:20 -06:00   cluster1-01_clus2    cluster1-
02_clus2   none
node2
       3/5/2024 19:21:18 -06:00   cluster1-02_clus2    cluster1-
01_clus1   none
       3/5/2024 19:21:20 -06:00   cluster1-02_clus2    cluster1-
01_clus2   none
```

All ONTAP releases

For all ONTAP releases, you can also use the `cluster ping-cluster -node <name>` command to check the connectivity:

```
cluster ping-cluster -node <name>
```

```
cluster1::*> cluster ping-cluster -node local
Host is cluster1-02
Getting addresses from network interface table...
Cluster cluster1-01_clus1 169.254.209.69 cluster1-01     e0a
Cluster cluster1-01_clus2 169.254.49.125 cluster1-01     e0b
Cluster cluster1-02_clus1 169.254.47.194 cluster1-02     e0a
Cluster cluster1-02_clus2 169.254.19.183 cluster1-02     e0b
Local = 169.254.47.194 169.254.19.183
Remote = 169.254.209.69 169.254.49.125
Cluster Vserver Id = 4294967293
Ping status:

Basic connectivity succeeds on 4 path(s)
Basic connectivity fails on 0 path(s)

Detected 9000 byte MTU on 4 path(s):
    Local 169.254.19.183 to Remote 169.254.209.69
    Local 169.254.19.183 to Remote 169.254.49.125
    Local 169.254.47.194 to Remote 169.254.209.69
    Local 169.254.47.194 to Remote 169.254.49.125
Larger than PMTU communication succeeds on 4 path(s)
RPC status:
2 paths up, 0 paths down (tcp check)
2 paths up, 0 paths down (udp check)
```

6. Verify that the auto-revert command is enabled on all cluster LIFs:

```
network interface show -vserver Cluster -fields auto-revert
```

Show example

```
cluster1::*> network interface show -vserver Cluster -fields auto-
revert

          Logical
Vserver   Interface           Auto-revert
--------- ------------------- ------------
Cluster
          cluster1-01_clus1   true
          cluster1-01_clus2   true
          cluster1-02_clus1   true
          cluster1-02_clus2   true
4 entries were displayed.
```

What's next?

After you've prepared to install the NX-OS software and RCF, you can install or upgrade the NX-OS software.

Install or upgrade the NX-OS software

Follow this procedure to install the NX-OS software on the Nexus 9336C-FX2 and 9336C-FX2-T switches.

Before you begin, complete the procedure in Prepare to install NX-OS and RCF.

Review requirements

Before you begin

Make sure you do the following:

- Run the `show install all impact nxos bootflash:<image_name>.bin` command on the switch to review the impact of installing or upgrading the new NX-OS software image. It verifies the image integrity, checks for necessary reboots, evaluates hardware compatibility, and confirms sufficient space.
- Review the release notes for the target NX-OS software version to check for any specific requirements.
- Verify that you have a current backup of the switch configuration.
- Verify that you have a fully functioning cluster (no errors in the logs or similar issues).

Suggested documentation

- Cisco Ethernet switch page

  Consult the switch compatibility table for the supported ONTAP and NX-OS versions.

- Software Upgrade and downgrade guides

  Refer to the appropriate software and upgrade guides available on the Cisco website for complete documentation on the Cisco switch upgrade and downgrade procedures.

- Cisco Nexus 9000 and 3000 Upgrade and ISSU Matrix

  Provides information on Disruptive Upgrade/Downgrade for Cisco NX-OS software on Nexus 9000 Series Switches
  based on your current and target releases.

  On the page, select **Disruptive Upgrade** and select your current release and target release from the dropdown list.

About the examples

The examples in this procedure use the following switch and node nomenclature:

- The names of the two Cisco switches are cs1 and cs2.
- The node names are cluster1-01, cluster1-02, cluster1-03, and cluster1-04.
- The cluster LIF names are cluster1-01_clus1, cluster1-01_clus2, cluster1-02_clus1, cluster1-02_clus2 , cluster1-03_clus1, cluster1-03_clus2, cluster1-04_clus1, and cluster1-04_clus2.
- The `cluster1::*>` prompt indicates the name of the cluster.

Install the software

The procedure requires the use of both ONTAP commands and Cisco Nexus 9000 Series Switches commands; ONTAP commands are used unless otherwise indicated.

Steps

1. Connect the cluster switch to the management network.
2. Use the ping command to verify connectivity to the server hosting the NX-OS software and the RCF.

   Show example

   This example verifies that the switch can reach the server at IP address 172.19.2.1:

   ```
   cs2# ping 172.19.2.1 VRF management
   Pinging 172.19.2.1 with 0 bytes of data:

   Reply From 172.19.2.1: icmp_seq = 0. time= 5910 usec.
   ```

3. Display the cluster ports on each node that are connected to the cluster switches:

   ```
   network device-discovery show
   ```

Show example

```
cluster1::*> network device-discovery show
Node/       Local  Discovered
Protocol    Port   Device (LLDP: ChassisID)  Interface
Platform
----------- ------ ------------------------- ----------------
--------------
cluster1-01/cdp
            e0a    cs1                       Ethernet1/7       N9K-
C9336C-FX2
            e0b    cs2                       Ethernet1/7       N9K-
C9336C-FX2
cluster1-02/cdp
            e0a    cs1                       Ethernet1/8       N9K-
C9336C-FX2
            e0b    cs2                       Ethernet1/8       N9K-
C9336C-FX2
cluster1-03/cdp
            e0a    cs1                       Ethernet1/1/1     N9K-
C9336C-FX2
            e0b    cs2                       Ethernet1/1/1     N9K-
C9336C-FX2
cluster1-04/cdp
            e0a    cs1                       Ethernet1/1/2     N9K-
C9336C-FX2
            e0b    cs2                       Ethernet1/1/2     N9K-
C9336C-FX2
cluster1::*>
```

4. Check the administrative and operational status of each cluster port.
   a. Verify that all the cluster ports are **up** with a healthy status:

      ```
      network port show -ipspace Cluster
      ```

Show example

```
cluster1::*> network port show -ipspace Cluster

Node: cluster1-01

Ignore
                                                  Speed(Mbps)
Health   Health
Port      IPspace      Broadcast Domain Link MTU  Admin/Oper
Status   Status
--------- ------------ ---------------- ---- ---- -----------
-------- ------
e0a       Cluster      Cluster          up   9000  auto/100000
healthy false
e0b       Cluster      Cluster          up   9000  auto/100000
healthy false

Node: cluster1-02

Ignore
                                                  Speed(Mbps)
Health   Health
Port      IPspace      Broadcast Domain Link MTU  Admin/Oper
Status   Status
--------- ------------ ---------------- ---- ---- -----------
-------- ------
e0a       Cluster      Cluster          up   9000  auto/100000
healthy false
e0b       Cluster      Cluster          up   9000  auto/100000
healthy false
8 entries were displayed.

Node: cluster1-03

   Ignore
                                                  Speed(Mbps)
Health   Health
Port      IPspace      Broadcast Domain Link MTU  Admin/Oper
Status   Status
--------- ------------ ---------------- ---- ---- -----------
-------- ------
e0a       Cluster      Cluster          up   9000  auto/10000
healthy  false
e0b       Cluster      Cluster          up   9000  auto/10000
healthy  false
```

```
Node: cluster1-04

Ignore
                                                          Speed(Mbps)
Health   Health
Port      IPspace      Broadcast Domain Link MTU  Admin/Oper
Status   Status
--------- ------------ ---------------- ---- ---- -----------
-------- ------
e0a       Cluster      Cluster          up   9000  auto/10000
healthy  false
e0b       Cluster      Cluster          up   9000  auto/10000
healthy  false
cluster1::*>
```

b. Verify that all the cluster interfaces (LIFs) are on the home port:

```
network interface show -vserver Cluster
```

Show example

```
cluster1::*> network interface show -vserver Cluster
            Logical            Status     Network
Current      Current Is
Vserver     Interface          Admin/Oper Address/Mask      Node
Port    Home
----------- ------------------ ---------- -----------------
------------ ------- ----
Cluster
            cluster1-01_clus1  up/up     169.254.3.4/23
cluster1-01  e0a     true
            cluster1-01_clus2  up/up     169.254.3.5/23
cluster1-01  e0b     true
            cluster1-02_clus1  up/up     169.254.3.8/23
cluster1-02  e0a     true
            cluster1-02_clus2  up/up     169.254.3.9/23
cluster1-02  e0b     true
            cluster1-03_clus1  up/up     169.254.1.3/23
cluster1-03  e0a     true
            cluster1-03_clus2  up/up     169.254.1.1/23
cluster1-03  e0b     true
            cluster1-04_clus1  up/up     169.254.1.6/23
cluster1-04  e0a     true
            cluster1-04_clus2  up/up     169.254.1.7/23
cluster1-04  e0b     true
8 entries were displayed.
cluster1::*>
```

c. Verify that the cluster displays information for both cluster switches:

`system cluster-switch show -is-monitoring-enabled-operational true`

Show example

```
cluster1::*> system cluster-switch show -is-monitoring-enabled
-operational true
Switch                      Type               Address
Model
--------------------------- ------------------ ----------------
--------------
cs1                         cluster-network    10.233.205.90
N9K-C9336C-FX2
     Serial Number: FOCXXXXXXGD
      Is Monitored: true
            Reason: None
  Software Version: Cisco Nexus Operating System (NX-OS)
Software, Version
                    9.3(5)
    Version Source: CDP

cs2                         cluster-network    10.233.205.91
N9K-C9336C-FX2
     Serial Number: FOCXXXXXXGS
      Is Monitored: true
            Reason: None
  Software Version: Cisco Nexus Operating System (NX-OS)
Software, Version
                    9.3(5)
    Version Source: CDP
cluster1::*>
```

5. Disable auto-revert on the cluster LIFs. The cluster LIFs fail over to the partner cluster switch and remain there as you perform the upgrade procedure on the targeted switch:

   ```
   network interface modify -vserver Cluster -lif * -auto-revert false
   ```

6. Copy the NX-OS software and EPLD images to the Nexus 9336C-FX2 switch.

Show example

```
cs2# copy sftp: bootflash: vrf management
Enter source filename: /code/nxos.9.3.5.bin
Enter hostname for the sftp server: 172.19.2.1
Enter username: user1

Outbound-ReKey for 172.19.2.1:22
Inbound-ReKey for 172.19.2.1:22
user1@172.19.2.1's password:
sftp> progress
Progress meter enabled
sftp> get   /code/nxos.9.3.5.bin  /bootflash/nxos.9.3.5.bin
/code/nxos.9.3.5.bin  100% 1261MB   9.3MB/s   02:15
sftp> exit
Copy complete, now saving to disk (please wait)...
Copy complete.


cs2# copy sftp: bootflash: vrf management
Enter source filename: /code/n9000-epld.9.3.5.img
Enter hostname for the sftp server: 172.19.2.1
Enter username: user1

Outbound-ReKey for 172.19.2.1:22
Inbound-ReKey for 172.19.2.1:22
user1@172.19.2.1's password:
sftp> progress
Progress meter enabled
sftp> get   /code/n9000-epld.9.3.5.img  /bootflash/n9000-
epld.9.3.5.img
/code/n9000-epld.9.3.5.img  100%  161MB   9.5MB/s   00:16
sftp> exit
Copy complete, now saving to disk (please wait)...
Copy complete.
```

7. Verify the running version of the NX-OS software:

   ```
   show version
   ```

Show example

```
cs2# show version
Cisco Nexus Operating System (NX-OS) Software
TAC support: http://www.cisco.com/tac
Copyright (C) 2002-2020, Cisco and/or its affiliates.
All rights reserved.
The copyrights to certain works contained in this software are
owned by other third parties and used and distributed under their
own
licenses, such as open source.  This software is provided "as is,"
and unless
otherwise stated, there is no warranty, express or implied,
including but not
limited to warranties of merchantability and fitness for a
particular purpose.
Certain components of this software are licensed under
the GNU General Public License (GPL) version 2.0 or
GNU General Public License (GPL) version 3.0  or the GNU
Lesser General Public License (LGPL) Version 2.1 or
Lesser General Public License (LGPL) Version 2.0.
A copy of each such license is available at
http://www.opensource.org/licenses/gpl-2.0.php and
http://opensource.org/licenses/gpl-3.0.html and
http://www.opensource.org/licenses/lgpl-2.1.php and
http://www.gnu.org/licenses/old-licenses/library.txt.

Software
  BIOS: version 08.38
  NXOS: version 9.3(4)
  BIOS compile time:  05/29/2020
  NXOS image file is: bootflash:///nxos.9.3.4.bin
  NXOS compile time:  4/28/2020 21:00:00 [04/29/2020 02:28:31]


Hardware
  cisco Nexus9000 C9336C-FX2 Chassis
  Intel(R) Xeon(R) CPU E5-2403 v2 @ 1.80GHz with 8154432 kB of
memory.
  Processor Board ID FOC20291J6K

  Device name: cs2
  bootflash:   53298520 kB
Kernel uptime is 0 day(s), 0 hour(s), 3 minute(s), 42 second(s)
```

```
Last reset at 157524 usecs after Mon Nov  2 18:32:06 2020
  Reason: Reset Requested by CLI command reload
  System version: 9.3(4)
  Service:

plugin
  Core Plugin, Ethernet Plugin

Active Package(s):


cs2#
```

8. Install the NX-OS image.

   Installing the image file causes it to be loaded every time the switch is rebooted.

Show example

```
cs2# install all nxos bootflash:nxos.9.3.5.bin

Installer will perform compatibility check first. Please wait.
Installer is forced disruptive

Verifying image bootflash:/nxos.9.3.5.bin for boot variable "nxos".
[] 100% -- SUCCESS

Verifying image type.
[] 100% -- SUCCESS

Preparing "nxos" version info using image bootflash:/nxos.9.3.5.bin.
[] 100% -- SUCCESS

Preparing "bios" version info using image bootflash:/nxos.9.3.5.bin.
[] 100% -- SUCCESS

Performing module support checks.
[] 100% -- SUCCESS

Notifying services about system upgrade.
[] 100% -- SUCCESS



Compatibility check is done:
Module  Bootable  Impact          Install-type  Reason
------  --------  --------------- ------------  ---------
  1     yes       Disruptive      Reset         Default upgrade is
not hitless



Images will be upgraded according to following table:

Module   Image    Running-Version(pri:alt)                New-
Version         Upg-Required
-------  -------- ----------------------------------------
-------------------- ------------
  1      nxos     9.3(4)                                  9.3(5)
yes
  1      bios     v08.37(01/28/2020):v08.23(09/23/2015)
v08.38(05/29/2020)      yes
```

```
Switch will be reloaded for disruptive upgrade.

Do you want to continue with the installation (y/n)? [n] y

Install is in progress, please wait.

Performing runtime checks.
[] 100% -- SUCCESS

Setting boot variables.
[] 100% -- SUCCESS

Performing configuration copy.
[] 100% -- SUCCESS

Module 1: Refreshing compact flash and upgrading
bios/loader/bootrom.
Warning: please do not remove or power off the module at this time.
[] 100% -- SUCCESS

Finishing the upgrade, switch will reboot in 10 seconds.
```

9. Verify the new version of NX-OS software after the switch has rebooted:

   ```
   show version
   ```

Show example

```
cs2# show version

Cisco Nexus Operating System (NX-OS) Software
TAC support: http://www.cisco.com/tac
Copyright (C) 2002-2020, Cisco and/or its affiliates.
All rights reserved.
The copyrights to certain works contained in this software are
owned by other third parties and used and distributed under their
own
licenses, such as open source.  This software is provided "as is,"
and unless
otherwise stated, there is no warranty, express or implied,
including but not
limited to warranties of merchantability and fitness for a
particular purpose.
Certain components of this software are licensed under
the GNU General Public License (GPL) version 2.0 or
GNU General Public License (GPL) version 3.0  or the GNU
Lesser General Public License (LGPL) Version 2.1 or
Lesser General Public License (LGPL) Version 2.0.
A copy of each such license is available at
http://www.opensource.org/licenses/gpl-2.0.php and
http://opensource.org/licenses/gpl-3.0.html and
http://www.opensource.org/licenses/lgpl-2.1.php and
http://www.gnu.org/licenses/old-licenses/library.txt.

Software
  BIOS: version 05.33
  NXOS: version 9.3(5)
  BIOS compile time:  09/08/2018
  NXOS image file is: bootflash:///nxos.9.3.5.bin
  NXOS compile time:  11/4/2018 21:00:00 [11/05/2018 06:11:06]


Hardware
  cisco Nexus9000 C9336C-FX2 Chassis
  Intel(R) Xeon(R) CPU E5-2403 v2 @ 1.80GHz with 8154432 kB of
memory.
  Processor Board ID FOC20291J6K

  Device name: cs2
  bootflash:   53298520 kB
Kernel uptime is 0 day(s), 0 hour(s), 3 minute(s), 42 second(s)
```

```
Last reset at 277524 usecs after Mon Nov  2 22:45:12 2020
  Reason: Reset due to upgrade
  System version: 9.3(4)
  Service:

plugin
  Core Plugin, Ethernet Plugin

Active Package(s):
```

10. Upgrade the EPLD image and reboot the switch.

Show example

```
cs2# show version module 1 epld

EPLD Device                          Version
---------------------------------------
MI   FPGA                             0x7
IO   FPGA                             0x17
MI   FPGA2                            0x2
GEM  FPGA                             0x2
GEM  FPGA                             0x2
GEM  FPGA                             0x2
GEM  FPGA                             0x2

cs2# install epld bootflash:n9000-epld.9.3.5.img module all
Compatibility check:
Module        Type         Upgradable        Impact    Reason
------  ------------------ ----------------- --------- -----------
     1         SUP         Yes       disruptive  Module Upgradable

Retrieving EPLD versions.... Please wait.
Images will be upgraded according to following table:
Module  Type   EPLD              Running-Version   New-Version  Upg-
Required
------- ------ ----------------- ----------------- ------------
------------
     1  SUP    MI FPGA           0x07              0x07         No
     1  SUP    IO FPGA           0x17              0x19         Yes
     1  SUP    MI FPGA2          0x02              0x02         No
The above modules require upgrade.
The switch will be reloaded at the end of the upgrade
Do you want to continue (y/n) ?  [n] y

Proceeding to upgrade Modules.

Starting Module 1 EPLD Upgrade

Module 1 : IO FPGA [Programming] : 100.00% (     64 of      64
sectors)
Module 1 EPLD upgrade is successful.
Module   Type  Upgrade-Result
-------- ----- --------------
     1   SUP   Success

EPLDs upgraded.

Module 1 EPLD upgrade is successful.
```

11. After the switch reboot, log in again and verify that the new version of EPLD loaded successfully.

Show example

```
cs2# show version module 1 epld

EPLD Device                          Version
--------------------------------------
MI   FPGA                             0x7
IO   FPGA                             0x19
MI   FPGA2                            0x2
GEM  FPGA                             0x2
GEM  FPGA                             0x2
GEM  FPGA                             0x2
GEM  FPGA                             0x2
```

12. Verify the health of cluster ports on the cluster.
    a. Verify that cluster ports are up and healthy across all nodes in the cluster:

    ```
    network port show -ipspace Cluster
    ```

Show example

```
cluster1::*> network port show -ipspace Cluster

Node: cluster1-01

Ignore
                                                  Speed(Mbps)
Health   Health
Port      IPspace      Broadcast Domain Link MTU  Admin/Oper
Status   Status
--------- ------------ ---------------- ---- ---- -----------
-------- ------
e0a       Cluster      Cluster          up   9000  auto/10000
healthy  false
e0b       Cluster      Cluster          up   9000  auto/10000
healthy  false

Node: cluster1-02

Ignore
                                                  Speed(Mbps)
Health   Health
Port      IPspace      Broadcast Domain Link MTU  Admin/Oper
Status   Status
--------- ------------ ---------------- ---- ---- -----------
-------- ------
e0a       Cluster      Cluster          up   9000  auto/10000
healthy  false
e0b       Cluster      Cluster          up   9000  auto/10000
healthy  false

Node: cluster1-03

Ignore
                                                  Speed(Mbps)
Health   Health
Port      IPspace      Broadcast Domain Link MTU  Admin/Oper
Status   Status
--------- ------------ ---------------- ---- ---- -----------
-------- ------
e0a       Cluster      Cluster          up   9000  auto/100000
healthy false
e0b       Cluster      Cluster          up   9000  auto/100000
healthy false
```

```
Node: cluster1-04

Ignore
                                                          Speed(Mbps)
Health   Health
Port      IPspace      Broadcast Domain Link MTU  Admin/Oper
Status   Status
--------- ------------ ---------------- ---- ---- -----------
-------- ------
e0a       Cluster      Cluster          up   9000  auto/100000
healthy false
e0b       Cluster      Cluster          up   9000  auto/100000
healthy false
8 entries were displayed.
```

b. Verify the switch health from the cluster.

```
network device-discovery show -protocol cdp
```

Show example

```
cluster1::*> network device-discovery show -protocol cdp
Node/       Local  Discovered
Protocol    Port   Device (LLDP: ChassisID)  Interface
Platform
----------- ------ ------------------------- -----------------
--------------
cluster1-01/cdp
            e0a    cs1                       Ethernet1/7
N9K-C9336C-FX2
            e0b    cs2                       Ethernet1/7
N9K-C9336C-FX2
cluster01-2/cdp
            e0a    cs1                       Ethernet1/8
N9K-C9336C-FX2
            e0b    cs2                       Ethernet1/8
N9K-C9336C-FX2
cluster01-3/cdp
            e0a    cs1                       Ethernet1/1/1
N9K-C9336C-FX2
            e0b    cs2                       Ethernet1/1/1
N9K-C9336C-FX2
cluster1-04/cdp
            e0a    cs1                       Ethernet1/1/2
N9K-C9336C-FX2
            e0b    cs2                       Ethernet1/1/2
N9K-C9336C-FX2

cluster1::*> system cluster-switch show -is-monitoring-enabled
-operational true
Switch                      Type               Address
Model
--------------------------- ------------------ ----------------
--------------
cs1                         cluster-network    10.233.205.90
N9K-C9336C-FX2
     Serial Number: FOCXXXXXXGD
      Is Monitored: true
            Reason: None
  Software Version: Cisco Nexus Operating System (NX-OS)
Software, Version
                    9.3(5)
    Version Source: CDP

cs2                         cluster-network    10.233.205.91
```

```
N9K-C9336C-FX2
     Serial Number: FOCXXXXXXGS
      Is Monitored: true
            Reason: None
  Software Version: Cisco Nexus Operating System (NX-OS)
Software, Version
                    9.3(5)
    Version Source: CDP

2 entries were displayed.
```

You might observe the following output on the cs1 switch console depending on the RCF version previously loaded on the switch:

```
2020 Nov 17 16:07:18 cs1 %$ VDC-1 %$ %STP-2-UNBLOCK_CONSIST_PORT:
Unblocking port port-channel1 on VLAN0092. Port consistency
restored.
2020 Nov 17 16:07:23 cs1 %$ VDC-1 %$ %STP-2-BLOCK_PVID_PEER:
Blocking port-channel1 on VLAN0001. Inconsistent peer vlan.
2020 Nov 17 16:07:23 cs1 %$ VDC-1 %$ %STP-2-BLOCK_PVID_LOCAL:
Blocking port-channel1 on VLAN0092. Inconsistent local vlan.
```

13. Verify that the cluster is healthy:

    `cluster show`

    Show example

```
cluster1::*> cluster show
Node                 Health   Eligibility   Epsilon
-------------------- -------- ------------- -------
cluster1-01          true     true          false
cluster1-02          true     true          false
cluster1-03          true     true          true
cluster1-04          true     true          false
4 entries were displayed.
cluster1::*>
```

14. Repeat steps 6 to 13 to install the NX-OS software on switch cs1.
15. Verify the connectivity of the remote cluster interfaces before enabling auto-revert on the cluster LIFs:

ONTAP 9.9.1 and later

You can use the `network interface check cluster-connectivity` command to start an accessibility check for cluster connectivity and then display the details:

`network interface check cluster-connectivity start` and `network interface check cluster-connectivity show`

```
cluster1::*> network interface check cluster-connectivity start
```

NOTE: Wait for a number of seconds before running the `show` command to display the details.

```
cluster1::*> network interface check cluster-connectivity show
                                  Source               Destination
Packet
Node   Date                       LIF                  LIF
Loss
------ -------------------------- -------------------
------------------ -----------
cluster1-01
       3/5/2022 19:21:18 -06:00   cluster1-01_clus2    cluster1-02-
clus1   none
       3/5/2022 19:21:20 -06:00   cluster1-01_clus2    cluster1-
02_clus2   none
cluster1-02
       3/5/2022 19:21:18 -06:00   cluster1-02_clus2    cluster1-
01_clus1   none
       3/5/2022 19:21:20 -06:00   cluster1-02_clus2    cluster1-
01_clus2   none
```

All ONTAP releases

For all ONTAP releases, you can also use the `cluster ping-cluster -node <name>` command to check the connectivity:

```
cluster ping-cluster -node <name>
```

```
cluster1::*> cluster ping-cluster -node local
Host is cluster1-02
Getting addresses from network interface table...
Cluster cluster1-01_clus1 169.254.209.69 cluster1-01     e0a
Cluster cluster1-01_clus2 169.254.49.125 cluster1-01     e0b
Cluster cluster1-02_clus1 169.254.47.194 cluster1-02     e0a
Cluster cluster1-02_clus2 169.254.19.183 cluster1-02     e0b
Local = 169.254.47.194 169.254.19.183
Remote = 169.254.209.69 169.254.49.125
Cluster Vserver Id = 4294967293
Ping status:

Basic connectivity succeeds on 4 path(s)
Basic connectivity fails on 0 path(s)

Detected 9000 byte MTU on 4 path(s):
    Local 169.254.19.183 to Remote 169.254.209.69
    Local 169.254.19.183 to Remote 169.254.49.125
    Local 169.254.47.194 to Remote 169.254.209.69
    Local 169.254.47.194 to Remote 169.254.49.125
Larger than PMTU communication succeeds on 4 path(s)
RPC status:
2 paths up, 0 paths down (tcp check)
2 paths up, 0 paths down (udp check)
```

16. Enable auto-revert on the cluster LIFs.

    network interface modify -vserver Cluster -lif * -auto-revert true

17. Verify that the cluster LIFs have reverted to their home port:

    network interface show -vserver Cluster

Show example

```
cluster1::*> network interface show -vserver Cluster
            Logical              Status     Network            Current
Current Is
Vserver     Interface            Admin/Oper Address/Mask       Node
Port    Home
----------- ------------------ ---------- ------------------
------------------- ------- ----
Cluster
            cluster1-01_clus1  up/up      169.254.3.4/23
cluster1-01         e0b     true
            cluster1-01_clus2  up/up      169.254.3.5/23
cluster1-01         e0b     true
            cluster1-02_clus1  up/up      169.254.3.8/23
cluster1-02         e0b     true
            cluster1-02_clus2  up/up      169.254.3.9/23
cluster1-02         e0b     true
            cluster1-03_clus1  up/up      169.254.1.3/23
cluster1-03         e0b     true
            cluster1-03_clus2  up/up      169.254.1.1/23
cluster1-03         e0b     true
            cluster1-04_clus1  up/up      169.254.1.6/23
cluster1-04         e0b     true
            cluster1-04_clus2  up/up      169.254.1.7/23
cluster1-04         e0b     true
8 entries were displayed.
cluster1::*>
```

If any cluster LIFs have not returned to their home ports, revert them manually from the local node:

```
network interface revert -vserver Cluster -lif <lif_name>
```

What's next?

After you've installed or upgraded the NX-OS software, you can install or upgrade the RCF.

Install or upgrade the RCF

Install or upgrade the Reference Configuration File (RCF) overview

You install the Reference Configuration File (RCF) after setting up the Nexus 9336C-FX2 storage switch for the first time. You upgrade your RCF version when you have an existing version of the RCF file installed on your switch.

See the Knowledge Base article How to clear configuration on a Cisco interconnect switch while retaining remote connectivity for further information when installing or upgrading your RCF.

Available RCF configurations

The following table describes the RCFs available for different configurations. Choose the RCF applicable to your configuration. See Cisco Ethernet Switches for more information.

For specific port and VLAN usage details, refer to the banner and important notes section in your RCF.

RCF name	Description
2-Cluster-HA-Breakout	Supports two ONTAP clusters with at least eight nodes, including nodes that use shared Cluster+HA ports.
4-Cluster-HA-Breakout	Supports four ONTAP clusters with at least four nodes, including nodes that use shared Cluster+HA ports.
1-Cluster-HA	All ports are configured for 40/100GbE. Supports shared cluster/HA traffic on ports. Required for AFF A320, AFF A250, and FAS500f systems. Additionally, all ports can be used as dedicated cluster ports.
1-Cluster-HA-Breakout	Ports are configured for 4x10GbE breakout, 4x25GbE breakout (RCF 1.6+ on 100GbE switches), and 40/100GbE. Supports shared cluster/HA traffic on ports for nodes that use shared cluster/HA ports: AFF A320, AFF A250, and FAS500f systems. Additionally, all ports can be used as dedicated cluster ports.
Cluster-HA-Storage	Ports are configured for 40/100GbE for Cluster+HA, 4x10GbE breakout for Cluster and 4x25GbE breakout for Cluster+HA, and 100GbE for each storage HA pair.
Cluster	Two flavors of RCF with different allocations of 4x10GbE ports (breakout) and 40/100GbE ports. All FAS and AFF nodes are supported, except for AFF A320, AFF A250, and FAS500f systems.
Storage	All ports are configured for 100GbE NVMe storage connections.

Available RCFs

The following table lists the available RCFs for 9336C-FX2 and 9336C-FX2-T switches. Choose the applicable RCF version for your configuration. See Cisco Ethernet Switches for more information.

RCF name
Cluster-HA-Breakout RCF 1.*xx*
Cluster-HA-Storage RCF 1.*xx*
Storage RCF 1.*xx*
MultiCluster-HA RCF 1.*xx*

Suggested documentation

- Cisco Ethernet Switches

  Consult the switch compatibility table for the supported ONTAP and RCF versions on the NetApp Support Site. Note that there can be command dependencies between the command syntax in the RCF and the syntax found in specific versions of NX-OS.

- Cisco Nexus 9000 Series Switches

  Refer to the appropriate software and upgrade guides available on the Cisco website for complete documentation on the Cisco switch upgrade and downgrade procedures.

About the examples

The examples in this procedure use the following switch and node nomenclature:

- The names of the two Cisco switches are cs1 and cs2.
- The node names are node1-01, node1-02, node1-03, and node1-04.
- The cluster LIF names are node1-01_clus1, node1-01_clus2, node1-02_clus1, node1-02_clus2, node1-03_clus1, node1-03_clus2, node1-04_clus1, and node1-04_clus2.
- The `cluster1::*>` prompt indicates the name of the cluster.

See the Hardware Universe to verify the correct ports on your platform.

The command outputs might vary depending on different releases of ONTAP.

Commands used

The procedure requires the use of both ONTAP commands and Cisco Nexus 9000 Series Switches commands; ONTAP commands are used unless otherwise indicated.

What's next?

After you've reviewed the install RCF or upgrade RCF procedure, you can install the RCF or upgrade your RCF as needed.

Install the Reference Configuration File

You install the Reference Configuration File (RCF) after setting up the Nexus 9336C-FX2 and 9336C-FX2-T storage switches for the first time.

See the Knowledge Base article How to clear configuration on a Cisco interconnect switch while retaining remote connectivity for further information when installing your RCF.

Before you begin

Verify the following installations and connections:

- A console connection to the switch. The console connection is optional if you have remote access to the switch.
- Switch cs1 and switch cs2 are powered up and the initial switch setup is complete (the Management IP address and SSH is set up).
- The desired NX-OS version has been installed.
- ONTAP node cluster ports are not connected.

Step 1: Install the RCF on the switches

1. Login to switch cs1 using SSH or by using a serial console.
2. Copy the RCF to the bootflash of switch cs1 using one of the following transfer protocols: FTP, TFTP, SFTP, or SCP.

   For more information on Cisco commands, see the appropriate guide in the Cisco Nexus 9000 Series NX-OS Command Reference.

   Show example

   This example shows TFTP being used to copy an RCF to the bootflash on switch cs1:

   ```
   cs1# copy tftp: bootflash: vrf management
   Enter source filename: Nexus_9336C_RCF_v1.6-Storage.txt
   Enter hostname for the tftp server: 172.22.201.50
   Trying to connect to tftp server......Connection to Server
   Established.
   TFTP get operation was successful
   Copy complete, now saving to disk (please wait)...
   ```

3. Apply the RCF previously downloaded to the bootflash.

   For more information on Cisco commands, see the appropriate guide in the Cisco Nexus 9000 Series NX-OS Command Reference.

   Show example

   This example shows the RCF `Nexus_9336C_RCF_v1.6-Storage.txt` being installed on switch cs1:

   ```
   cs1# copy Nexus_9336C_RCF_v1.6-Storage.txt running-config echo-
   commands
   ```

4. Examine the banner output from the `show banner motd` command. You must read and follow these instructions to ensure the correct configuration and operation of the switch.

Show example

```
cs1# show banner motd

*****************************************************************
**********
* NetApp Reference Configuration File (RCF)
*
* Switch    : Nexus N9K-C9336C-FX2
* Filename  : Nexus_9336C_RCF_v1.6-Storage.txt
* Date      : 10-23-2020
* Version   : v1.6
*
* Port Usage : Storage configuration
* Ports  1-36: 100GbE Controller and Shelf Storage Ports
*****************************************************************
**********
```

5. Verify that the RCF is the correct newer version:

   `show running-config`

   When you check the output to verify you have the correct RCF, make sure that the following information is correct:

   - The RCF banner
   - The node and port settings
   - Customizations

     The output varies according to your site configuration. Check the port settings and refer to the release notes for any changes specific to the RCF that you have installed.

6. Record any custom additions between the current `running-config` file and the RCF file in use.
7. After you verify that the RCF versions and switch settings are correct, copy the `running-config` file to the `startup-config` file.

```
cs1# copy running-config startup-config
[########################################] 100% Copy complete
```

8. Save basic configuration details to the `write_erase.cfg` file on the bootflash.

   `cs1# show run | i "username admin password" > bootflash:write_erase.cfg`

   `cs1# show run | section "vrf context management" >> bootflash:write_erase.cfg`

```
cs1# show run | section "interface mgmt0" >> bootflash:write_erase.cfg

cs1# show run | section "switchname" >> bootflash:write_erase.cfg
```

9. When installing RCF version 1.12 and later, run the following commands:

```
cs1# echo "hardware access-list tcam region ing-racl 1024" >>
bootflash:write_erase.cfg

cs1# echo "hardware access-list tcam region egr-racl 1024" >>
bootflash:write_erase.cfg

cs1# echo "hardware access-list tcam region ing-l2-qos 1280" >>
bootflash:write_erase.cfg
```

   See the Knowledge Base article How to clear configuration on a Cisco interconnect switch while retaining remote connectivity for further details.

10. Verify that the `write_erase.cfg` file is populated as expected:

```
show file bootflash:write_erase.cfg
```

11. Issue the `write erase` command to erase the current saved configuration:

```
cs1# write erase

Warning: This command will erase the startup-configuration.

Do you wish to proceed anyway? (y/n) [n] y
```

12. Copy the previously saved basic configuration into the startup configuration.

```
cs1# copy bootflash:write_erase.cfg startup-config
```

13. Reboot switch cs1.

```
cs1# reload

This command will reboot the system. (y/n)? [n] y
```

14. Repeat steps 1 through 13 on switch cs2.
15. Connect the cluster ports of all nodes in the ONTAP cluster to switches cs1 and cs2.

Step 2: Verify the switch connections

1. Verify that the switch ports connected to the cluster ports are **up**.

```
show interface brief
```

Show example

```
cs1# show interface brief | grep up
mgmt0  --           up     <mgmt ip address>
1000    1500
Eth1/11         1       eth  trunk  up      none
100G(D) --
Eth1/12         1       eth  trunk  up      none
100G(D) --
Eth1/13         1       eth  trunk  up      none
100G(D) --
Eth1/14         1       eth  trunk  up      none
100G(D) --
Eth1/15         1       eth  trunk  up      none
100G(D) --
Eth1/16         1       eth  trunk  up      none
100G(D) --
Eth1/17         1       eth  trunk  up      none
100G(D) --
Eth1/18         1       eth  trunk  up      none
100G(D) --
Eth1/23         1       eth  trunk  up      none
100G(D) --
Eth1/24         1       eth  trunk  up      none
100G(D) --
Eth1/25         1       eth  trunk  up      none
100G(D) --
Eth1/26         1       eth  trunk  up      none
100G(D) --
Eth1/27         1       eth  trunk  up      none
100G(D) --
Eth1/28         1       eth  trunk  up      none
100G(D) --
Eth1/29         1       eth  trunk  up      none
100G(D) --
Eth1/30         1       eth  trunk  up      none
100G(D) --
```

2. Verify that the cluster nodes are in their correct cluster VLANs using the following commands:

   `show vlan brief`

   `show interface trunk`

Show example

```
cs1# show vlan brief

VLAN Name                              Status    Ports
---- --------------------------------- ---------
------------------------------
1    default                           active    Po999
30   VLAN0030                          active    Eth1/1, Eth1/2,
Eth1/3, Eth1/4
                                                 Eth1/5, Eth1/6,
Eth1/7, Eth1/8
                                                 Eth1/9, Eth1/10,
Eth1/11
                                                 Eth1/12, Eth1/13,
Eth1/14
                                                 Eth1/15, Eth1/16,
Eth1/17
                                                 Eth1/18, Eth1/19,
Eth1/20
                                                 Eth1/21, Eth1/22,
Eth1/23
                                                 Eth1/24, Eth1/25,
Eth1/26
                                                 Eth1/27, Eth1/28,
Eth1/29
                                                 Eth1/30, Eth1/31,
Eth1/32
                                                 Eth1/33, Eth1/34,
Eth1/35
                                                 Eth1/36

cs1# show interface trunk

--------------------------------------------------------
Port          Native  Status        Port
              Vlan                  Channel
--------------------------------------------------------
Eth1/1        1       trunking      --
Eth1/2        1       trunking      --
Eth1/3        1       trunking      --
Eth1/4        1       trunking      --
Eth1/5        1       trunking      --
Eth1/6        1       trunking      --
Eth1/7        1       trunking      --
Eth1/8        1       trunking      --
```

```
Eth1/9        1       trunking      --
Eth1/10       1       trunking      --
Eth1/11       1       trunking      --
Eth1/12       1       trunking      --
Eth1/13       1       trunking      --
Eth1/14       1       trunking      --
Eth1/15       1       trunking      --
Eth1/16       1       trunking      --
Eth1/17       1       trunking      --
Eth1/18       1       trunking      --
Eth1/19       1       trunking      --
Eth1/20       1       trunking      --
Eth1/21       1       trunking      --
Eth1/22       1       trunking      --
Eth1/23       1       trunking      --
Eth1/24       1       trunking      --
Eth1/25       1       trunking      --
Eth1/26       1       trunking      --
Eth1/27       1       trunking      --
Eth1/28       1       trunking      --
Eth1/29       1       trunking      --
Eth1/30       1       trunking      --
Eth1/31       1       trunking      --
Eth1/32       1       trunking      --
Eth1/33       1       trunking      --
Eth1/34       1       trunking      --
Eth1/35       1       trunking      --
Eth1/36       1       trunking      --

--------------------------------------------------------------------------
------------
Port          Vlans Allowed on Trunk
--------------------------------------------------------------------------
------------
Eth1/1        30
Eth1/2        30
Eth1/3        30
Eth1/4        30
Eth1/5        30
Eth1/6        30
Eth1/7        30
Eth1/8        30
Eth1/9        30
Eth1/10       30
Eth1/11       30
Eth1/12       30
```

```
Eth1/13       30
Eth1/14       30
Eth1/15       30
Eth1/16       30
Eth1/17       30
Eth1/18       30
Eth1/19       30
Eth1/20       30
Eth1/21       30
Eth1/22       30
Eth1/23       30
Eth1/24       30
Eth1/25       30
Eth1/26       30
Eth1/27       30
Eth1/28       30
Eth1/29       30
Eth1/30       30
Eth1/31       30
Eth1/32       30
Eth1/33       30
Eth1/34       30
Eth1/35       30
Eth1/36       30

--------------------------------------------------------------------------
------------
Port          Vlans Err-disabled on Trunk
--------------------------------------------------------------------------
------------
Eth1/1        none
Eth1/2        none
Eth1/3        none
Eth1/4        none
Eth1/5        none
Eth1/6        none
Eth1/7        none
Eth1/8        none
Eth1/9        none
Eth1/10       none
Eth1/11       none
Eth1/12       none
Eth1/13       none
Eth1/14       none
Eth1/15       none
Eth1/16       none
```

```
Eth1/17       none
Eth1/18       none
Eth1/19       none
Eth1/20       none
Eth1/21       none
Eth1/22       none
Eth1/23       none
Eth1/24       none
Eth1/25       none
Eth1/26       none
Eth1/27       none
Eth1/28       none
Eth1/29       none
Eth1/30       none
Eth1/31       none
Eth1/32       none
Eth1/33       none
Eth1/34       none
Eth1/35       none
Eth1/36       none

--------------------------------------------------------------------------
------------
Port          STP Forwarding
--------------------------------------------------------------------------
------------
Eth1/1        none
Eth1/2        none
Eth1/3        none
Eth1/4        none
Eth1/5        none
Eth1/6        none
Eth1/7        none
Eth1/8        none
Eth1/9        none
Eth1/10       none
Eth1/11       30
Eth1/12       30
Eth1/13       30
Eth1/14       30
Eth1/15       30
Eth1/16       30
Eth1/17       30
Eth1/18       30
Eth1/19       none
Eth1/20       none
```

```
Eth1/21       none
Eth1/22       none
Eth1/23       30
Eth1/24       30
Eth1/25       30
Eth1/26       30
Eth1/27       30
Eth1/28       30
Eth1/29       30
Eth1/30       30
Eth1/31       none
Eth1/32       none
Eth1/33       none
Eth1/34       none
Eth1/35       none
Eth1/36       none

--------------------------------------------------------------------------
------------
Port          Vlans in spanning tree forwarding state and not pruned
--------------------------------------------------------------------------
------------
Eth1/1        Feature VTP is not enabled
none
Eth1/2        Feature VTP is not enabled
none
Eth1/3        Feature VTP is not enabled
none
Eth1/4        Feature VTP is not enabled
none
Eth1/5        Feature VTP is not enabled
none
Eth1/6        Feature VTP is not enabled
none
Eth1/7        Feature VTP is not enabled
none
Eth1/8        Feature VTP is not enabled
none
Eth1/9        Feature VTP is not enabled
none
Eth1/10       Feature VTP is not enabled
none
Eth1/11       Feature VTP is not enabled
30
Eth1/12       Feature VTP is not enabled
30
```

```
Eth1/13       Feature VTP is not enabled
30
Eth1/14       Feature VTP is not enabled
30
Eth1/15       Feature VTP is not enabled
30
Eth1/16       Feature VTP is not enabled
30
Eth1/17       Feature VTP is not enabled
30
Eth1/18       Feature VTP is not enabled
30
Eth1/19       Feature VTP is not enabled
none
Eth1/20       Feature VTP is not enabled
none
Eth1/21       Feature VTP is not enabled
none
Eth1/22       Feature VTP is not enabled
none
Eth1/23       Feature VTP is not enabled
30
Eth1/24       Feature VTP is not enabled
30
Eth1/25       Feature VTP is not enabled
30
Eth1/26       Feature VTP is not enabled
30
Eth1/27       Feature VTP is not enabled
30
Eth1/28       Feature VTP is not enabled
30
Eth1/29       Feature VTP is not enabled
30
Eth1/30       Feature VTP is not enabled
30
Eth1/31       Feature VTP is not enabled
none
Eth1/32       Feature VTP is not enabled
none
Eth1/33       Feature VTP is not enabled
none
Eth1/34       Feature VTP is not enabled
none
Eth1/35       Feature VTP is not enabled
none
```

```
Eth1/36       Feature VTP is not enabled
none
```

For specific port and VLAN usage details, refer to the banner and important notes section in your RCF.

Step 3: Set up your ONTAP cluster

NetApp recommends that you use System Manager to set up new clusters.

System Manager provides a simple and easy workflow for cluster setup and configuration including assigning a node management IP address, initializing the cluster, creating a local tier, configuring protocols and provisioning initial storage.

Go to Configure ONTAP on a new cluster with System Manager for setup instructions.

What's next?

After you've installed your RCF, you can verify the SSH configuration

Upgrade your Reference Configuration File (RCF)

You upgrade your RCF version when you have an existing version of the RCF file installed on your operational switches.

Before you begin

Make sure you have the following:

- A current backup of the switch configuration.
- A fully functioning cluster (no errors in the logs or similar issues).
- The current RCF.
- If you are updating your RCF version, you need a boot configuration in the RCF that reflects the desired boot images.

  If you need to change the boot configuration to reflect the current boot images, you must do so before reapplying the RCF so that the correct version is instantiated on future reboots.

No operational inter-switch link (ISL) is needed during this procedure. This is by design because RCF version changes can affect ISL connectivity temporarily. To ensure non-disruptive cluster operations, the following procedure migrates all of the cluster LIFs to the operational partner switch while performing the steps on the target switch.

Before installing a new switch software version and RCFs, you must erase the switch settings and perform basic configuration. You must be connected to the switch using the serial console or have preserved basic configuration information before erasing the switch settings.

Step 1: Prepare for the upgrade

1. If AutoSupport is enabled on this cluster, suppress automatic case creation by invoking an AutoSupport message:

   ```
   system node autosupport invoke -node * -type all -message MAINT=xh
   ```

   Where *x* is the duration of the maintenance window in hours.

2. Change the privilege level to advanced, entering **y** when prompted to continue:

   ```
   set -privilege advanced
   ```

   The advanced prompt (*>) appears.

3. Display the ports on each node that are connected to the switches:

   ```
   network device-discovery show
   ```

   Show example

   ```
   cluster1::*> network device-discovery show
   Node/       Local  Discovered
   Protocol    Port   Device (LLDP: ChassisID) Interface       Platform
   ----------- ------ ------------------------ ---------------
   ---------
   node1-01/cdp
               e3a    cs1                      Ethernet1/7     N9K-
   C9336C
               e3b    cs2                      Ethernet1/7     N9K-
   C9336C
   node1-02/cdp
               e3a    cs1                      Ethernet1/8     N9K-
   C9336C
               e3b    cs2                      Ethernet1/8     N9K-
   C9336C
   .
   .
   .
   ```

4. Verify that all the storage ports are up with a healthy status:

   ```
   storage port show -port-type ENET
   ```

Show example

```
cluster1::*> storage port show -port-type ENET


                                      Speed
Node                Port Type  Mode    (Gb/s) State    Status
------------------ ---- ----- ------- ------ -------- -----------
node1-01
                    e3a ENET  -         100   enabled  online
                    e3b ENET  -         100   enabled  online
                    e7a ENET  -         100   enabled  online
                    e7b ENET  -         100   enabled  online
node1-02
                    e3a ENET  -         100   enabled  online
                    e3b ENET  -         100   enabled  online
                    e7a ENET  -         100   enabled  online
                    e7b ENET  -         100   enabled  online
.
.
.
```

5. Disable auto-revert on the cluster LIFs.

```
network interface modify -vserver Cluster -lif * -auto-revert false
```

Step 2: Configure ports

1. On switch cs1, shut down the ports connected to all the ports of the nodes.

```
cs1> enable
cs1# configure
cs1(config)# interface eth1/1/1-2,eth1/7-8
cs1(config-if-range)# shutdown
cs1(config-if-range)# exit
cs1(config)# exit
```

Make sure to shutdown **all** connected ports to avoid any network connection issues. See the Knowledge Base article Node out of quorum when migrating cluster LIF during switch OS upgrade for further details.

2. Verify that the cluster LIFs have failed over to the ports hosted on switch cs1. This might take a few seconds.

```
network interface show -role cluster
```

Show example

```
cluster1::*> network interface show -role cluster

            Logical         Status     Network             Current
Current Is
Vserver     Interface       Admin/Oper Address/Mask        Node
Port    Home
----------- --------------- ---------- ------------------
----------- ------- ----
Cluster
            node1-01_clus1  up/up      169.254.36.44/16    node1-01
e7a     true
            node1-01_clus2  up/up      169.254.7.5/16      node1-01
e7b     true
            node1-02_clus1  up/up      169.254.197.206/16 node1-02
e7a     true
            node1-02_clus2  up/up      169.254.195.186/16 node1-02
e7b     true
            node1-03_clus1  up/up      169.254.192.49/16   node1-03
e7a     true
            node1-03_clus2  up/up      169.254.182.76/16   node1-03
e7b     true
            node1-04_clus1  up/up      169.254.59.49/16    node1-04
e7a     true
            node1-04_clus2  up/up      169.254.62.244/16   node1-04
e7b     true

8 entries were displayed.
```

3. Verify that the cluster is healthy:

```
cluster show
```

Show example

```
cluster1::*> cluster show
Node                 Health  Eligibility   Epsilon
-------------------- ------- ------------  -------
node1-01             true    true          false
node1-02             true    true          false
node1-03             true    true          true
node1-04             true    true          false

4 entries were displayed.
```

4. If you have not already done so, save a copy of the current switch configuration by copying the output of the following command to a text file:

   `show running-config`

   a. Record any custom additions between the current `running-config` and the RCF file in use (such as an SNMP configuration for your organization).

   b. For NX-OS 10.2 and later, use the `show diff running-config` command to compare with the saved RCF file in the bootflash. Otherwise, use a third-party diff or compare tool.

5. Save basic configuration details to the `write_erase.cfg` file on the bootflash.

   Make sure to configure the following:

   - Username and password
   - Management IP address
   - Default gateway
   - Switch name

```
cs1# show run | i "username admin password" > bootflash:write_erase.cfg

cs1# show run | section "vrf context management" >> bootflash:write_erase.cfg

cs1# show run | section "interface mgmt0" >> bootflash:write_erase.cfg

cs1# show run | section "switchname" >> bootflash:write_erase.cfg
```

6. When upgrading to RCF version 1.12 and later, run the following commands:

```
cs1# echo "hardware access-list tcam region ing-racl 1024" >>
bootflash:write_erase.cfg

cs1# echo "hardware access-list tcam region egr-racl 1024" >>
bootflash:write_erase.cfg

cs1# echo "hardware access-list tcam region ing-l2-qos 1280 >>
```

`bootflash:write_erase.cfg`

See the Knowledge Base article How to clear configuration on a Cisco interconnect switch while retaining remote connectivity for further details.

7. Verify that the `write_erase.cfg` file is populated as expected:

   `show file bootflash:write_erase.cfg`

8. Issue the `write erase` command to erase the current saved configuration:

   ```
   cs1# write erase

   Warning: This command will erase the startup-configuration.

   Do you wish to proceed anyway? (y/n) [n] y
   ```

9. Copy the previously saved basic configuration into the startup configuration.

   ```
   cs1# copy bootflash:write_erase.cfg startup-config
   ```

10. Reboot the switch:

    ```
    cs1# reload

    This command will reboot the system. (y/n)? [n] y
    ```

11. After the management IP address is reachable again, log in to the switch through SSH.

    You might need to update host file entries related to the SSH keys.

12. Copy the RCF to the bootflash of switch cs1 using one of the following transfer protocols: FTP, TFTP, SFTP, or SCP.

    For more information on Cisco commands, see the appropriate guide in the Cisco Nexus 9000 Series NX-OS Command Reference guides.

    Show example

    This example shows TFTP being used to copy an RCF to the bootflash on switch cs1:

    ```
    cs1# copy tftp: bootflash: vrf management
    Enter source filename: Nexus_9336C_RCF_v1.6-Storage.txt
    Enter hostname for the tftp server: 172.22.201.50
    Trying to connect to tftp server......Connection to Server
    Established.
    TFTP get operation was successful
    Copy complete, now saving to disk (please wait)...
    ```

13. Apply the RCF previously downloaded to the bootflash.

For more information on Cisco commands, see the appropriate guide in the Cisco Nexus 9000 Series NX-OS Command Reference guides.

This example shows the RCF file `NX9336C-FX2-RCF-v1.13-1-Storage.txt` being installed on switch cs1:

```
cs1# copy Nexus_9336C_RCF_v1.6-Storage.txt running-config echo-commands
```

Make sure to thoroughly read the **Installation notes**, **Important Notes**, and **banner** sections of your RCF. You must read and follow these instructions to ensure the proper configuration and operation of the switch.

14. Verify that the RCF file is the correct newer version:

    `show running-config`

    When you check the output to verify you have the correct RCF, make sure that the following information is correct:

    - The RCF banner
    - The node and port settings
    - Customizations

      The output varies according to your site configuration. Check the port settings and refer to the release notes for any changes specific to the RCF that you have installed.

15. Reapply any previous customizations to the switch configuration.
16. After you verify the RCF versions, custom additions, and switch settings are correct, copy the `running-config` file to the `startup-config` file.

    For more information on Cisco commands, see the appropriate guide in the Cisco Nexus 9000 Series NX-OS Command Reference guides.

    ```
    cs1# copy running-config startup-config

    [] 100% Copy complete
    ```

17. Reboot switch cs1. You can ignore the “cluster switch health monitor” alerts and “cluster ports down” events reported on the nodes while the switch reboots.

    ```
    cs1# reload

    This command will reboot the system. (y/n)? [n] y
    ```

18. Verify that all the storage ports are up with a healthy status:

    ```
    storage port show -port-type ENET
    ```

Show example

```
cluster1::*> storage port show -port-type ENET


                                    Speed
Node               Port Type  Mode    (Gb/s) State    Status
------------------ ---- ----- ------- ------ -------- -----------
node1-01
                   e3a  ENET  -          100 enabled  online
                   e3b  ENET  -          100 enabled  online
                   e7a  ENET  -          100 enabled  online
                   e7b  ENET  -          100 enabled  online
node1-02
                   e3a  ENET  -          100 enabled  online
                   e3b  ENET  -          100 enabled  online
                   e7a  ENET  -          100 enabled  online
                   e7b  ENET  -          100 enabled  online
.
.
.
```

19. Verify that the cluster is healthy:

    `cluster show`

    Show example

```
cluster1::*> cluster show
Node               Health   Eligibility   Epsilon
------------------ -------- ------------- -------
node1-01           true     true          false
node1-02           true     true          false
node1-03           true     true          true
node1-04           true     true          false

4 entries were displayed.
```

20. Repeat steps 4 to 19 on switch cs2.
21. Enable auto-revert on the cluster LIFs.

    `network interface modify -vserver Cluster -lif * -auto-revert true`

Step 3: Verify the cluster network configuration and cluster health

1. Verify that the switch ports connected to the cluster ports are **up**.

```
show interface brief
```

2. Verify that the expected nodes are still connected:

```
show cdp neighbors
```

3. Verify that the cluster nodes are in their correct cluster VLANs using the following commands:

```
show vlan brief
```

```
show interface trunk
```

4. Verify that the cluster LIFs have reverted to their home port:

```
network interface show -role cluster
```

   If any cluster LIFs have not returned to their home ports, revert them manually from the local node:

   `network interface revert -vserver vserver_name -lif <lif-name>`

5. Verify that the cluster is healthy:

```
cluster show
```

6. Verify the connectivity of the remote cluster interfaces:

   a. You can use the `network interface check cluster-connectivity show` command to display the details of an accessibility check for cluster connectivity:

```
network interface check cluster-connectivity show
```

   b. Alternatively, you can use the `cluster ping-cluster -node <node-name>` command to check the connectivity:

```
cluster ping-cluster -node <node-name>
```

What's next?

After you've upgraded your RCF, you can verify the SSH configuration.

Verify your SSH configuration

If you are using the Ethernet Switch Health Monitor (CSHM) and log collection features, verify that SSH and SSH keys are enabled on the cluster switches.

Steps

1. Verify that SSH is enabled:

```
(switch) show ssh server
ssh version 2 is enabled
```

2. Verify that the SSH keys are enabled:

```
show ssh key
```

Show example

```
(switch)# show ssh key

rsa Keys generated:Fri Jun 28 02:16:00 2024

ssh-rsa
AAAAB3NzaC1yc2EAAAADAQABAAAAgQDiNrD52Q586wTGJjFAbjBlFaA23EpDrZ2sDCew
l7nwlioC6HBejxluIObAH8hrW8kR+gj0ZAfPpNeLGTg3APj/yiPTBoIZZxbWRShywAM5
PqyxWwRb7kp9Zt1YHzVuHYpSO82KUDowKrL6lox/YtpKoZUDZjrZjAp8hTv3JZsPgQ==

bitcount:1024
fingerprint:
SHA256:aHwhpzo7+YCDSrp3isJv2uVGz+mjMMokqdMeXVVXfdo

could not retrieve dsa key information

ecdsa Keys generated:Fri Jun 28 02:30:56 2024

ecdsa-sha2-nistp521
AAAAE2VjZHNhLXNoYTItbmlzdHA1MjEAAAAIbmlzdHA1MjEAAACFBABJ+ZX5SFKhS57e
vkE273e0VoqZi4/32dt+f14fBuKv80MjMsmLfjKtCWy1wgVt1Zi+C5TIBbugpzez529z
kFSF0ADb8JaGCoaAYe2HvWR/f6QLbKbqVIewCdqWgxzrIY5BPP5GBdxQJMBiOwEdnHg1
u/9Pzh/Vz9cHDcCW9qGE780QHA==

bitcount:521
fingerprint:
SHA256:TFGe2hXn6QIpcs/vyHzftHJ7Dceg0vQaULYRAlZeHwQ

(switch)# show feature | include scpServer
scpServer             1          enabled
(switch)# show feature | include ssh
sshServer             1          enabled
(switch)#
```

When enabling FIPS, you must change the bitcount to 256 on the switch using the command `ssh key ecdsa 256 force`. See Configure network security using FIPS for more details.

What's next?

After you've verified your SSH configuration, you configure switch health monitoring.

Reset the 9336C-FX2 and 9336C-FX2-T storage switches to factory defaults

To reset the 9336C-FX2 and 9336C-FX2-T storage switches to factory defaults, you must erase the 9336C-FX2 and 9336C-FX2-T switch settings.

About this task

- You must be connected to the switch using the serial console.
- This task resets the configuration of the management network.

Steps

1. Erase the existing configuration:

   `write erase`

   ```
   (cs2)# write erase

   Warning: This command will erase the startup-configuration.
   Do you wish to proceed anyway? (y/n) [n] y
   ```

2. Reload the switch software:

   `reload`

   ```
   (cs2)# reload

   This command will reboot the system. (y/n)? [n] y
   ```

   The system reboots and enters the configuration wizard. During the boot, if you receive the prompt “Abort Auto Provisioning and continue with normal setup? (yes/no)[n]”, you should respond **yes** to proceed.

What’s next

After you’ve reset your switches, you can reconfigure them as needed.

Replace Cisco Nexus 9336C-FX2 and 9336C-FX2-T storage switches

You can replace defective Nexus 9336C-FX2 and 9336C-FX2-T switches in a cluster network. This is a nondisruptive procedure.

Before you begin

Before installing the NX-OS software and RCFs on Cisco Nexus 9336C-FX2 and 9336C-FX2-T storage switches, ensure that:

- Your system can support Cisco Nexus 9336C-FX2 and 9336C-FX2-T storage switches.
- You have consulted the switch compatibility table on the Cisco Ethernet Switch page for the supported ONTAP, NX-OS, and RCF versions.
- You have referred to the appropriate software and upgrade guides available on the Cisco web site.

Cisco Nexus 3000 Series Switches:

- You have downloaded the applicable RCFs.
- The existing network configuration has the following characteristics:
  - The Cisco Ethernet Switches page has the latest RCF and NX-OS versions on your switches.
  - Management connectivity must exist on both switches.
- The replacement Cisco Nexus 9336C-FX2 switch has the following characteristics:
  - Management network connectivity is functional.
  - Console access to the replacement switch is in place.
  - The appropriate RCF and NX-OS operating system image is loaded onto the switch.
  - Initial confiugration of the switch is complete.

About this task

This procedure replaces the second Nexus 9336C-FX2 storage switch S2 with the new 9336C-FX switch NS2. The two nodes are node1 and node2.

Steps to complete:

- Confirm the switch to be replaced is S2.
- Disconnect the cables from switch S2.
- Reconnect the cables to switch NS2.
- Verify all device configurations on switch NS2.

There can be dependencies between command syntax in the RCF and NX-OS versions.

Steps

1. If AutoSupport is enabled on this cluster, suppress automatic case creation by invoking an AutoSupport message:

   ```
   system node autosupport invoke -node * -type all - message MAINT=xh
   ```

   x is the duration of the maintenance window in hours.

2. Check on the health status of the storage node ports to make sure that there is connection to storage switch S1:

   ```
   storage port show -port-type ENET
   ```

Show example

```
storage::*> storage port show -port-type ENET
                                  Speed                       VLAN
Node           Port Type  Mode    (Gb/s) State    Status       ID
-------------- ---- ----- ------- ------ -------- --------- ----
node1
               e3a  ENET  storage 100    enabled  online       30
               e3b  ENET  storage   0    enabled  offline      30
               e7a  ENET  storage   0    enabled  offline      30
               e7b  ENET  storage   0    enabled  offline      30
node2
               e3a  ENET  storage 100    enabled  online       30
               e3b  ENET  storage   0    enabled  offline      30
               e7a  ENET  storage   0    enabled  offline      30
               e7b  ENET  storage   0    enabled  offline      30
storage::*>
```

3. Verify that storage switch S1 is available:

   `network device-discovery show`

Show example

```
storage::*> network device-discovery show
Node/      Local Discovered
Protocol   Port  Device (LLDP: ChassisID)  Interface  Platform
--------   ----  ----------------------   ---------   ---------
node1/cdp
           e3a   S1                       Ethernet1/1 NX9336C
           e4a   node2                    e4a         AFF-A700
           e4e   node2                    e4e         AFF-A700
node1/lldp
           e3a   S1                       Ethernet1/1 -
           e4a   node2                    e4a         -
           e4e   node2                    e4e         -
node2/cdp
           e3a   S1                       Ethernet1/2 NX9336C
           e4a   node1                    e4a         AFF-A700
           e4e   node1                    e4e         AFF-A700
node2/lldp
           e3a   S1                       Ethernet1/2 -
           e4a   node1                    e4a         -
           e4e   node1                    e4e         -
storage::*>
```

4. Run the show `lldp neighbors` command on the working switch to confirm that you can see both nodes and all shelves:

   `show lldp neighbors`

Show example

```
S1# show lldp neighbors
Capability codes:
   (R) Router, (B) Bridge, (T) Telephone, (C) DOCSIS Cable Device
   (W) WLAN Access Point, (P) Repeater, (S) Station, (O) Other
Device ID        Local Intf   Hold-time    Capability    Port ID
node1            Eth1/1       121          S             e3a
node2            Eth1/2       121          S             e3a
SHFGD2008000011  Eth1/5       121          S             e0a
SHFGD2008000011  Eth1/6       120          S             e0a
SHFGD2008000022  Eth1/7       120          S             e0a
SHFGD2008000022  Eth1/8       120          S             e0a
```

5. Verify the shelf ports in the storage system:

   ```
   storage shelf port show -fields remote-device,remote-port
   ```

   Show example

   ```
   storage::*> storage shelf port show -fields remote-device,remote-
   port
   shelf   id  remote-port   remote-device
   -----   --  -----------   -------------
   3.20    0   Ethernet1/5   S1
   3.20    1   -             -
   3.20    2   Ethernet1/6   S1
   3.20    3   -             -
   3.30    0   Ethernet1/7   S1
   3.20    1   -             -
   3.30    2   Ethernet1/8   S1
   3.20    3   -             -
   storage::*>
   ```

6. Remove all cables attached to storage switch S2.
7. Reconnect all cables to the replacement switch NS2.
8. Recheck the health status of the storage node ports:

   ```
   storage port show -port-type ENET
   ```

   Show example

   ```
   storage::*> storage port show -port-type ENET
                                       Speed                       VLAN
   Node              Port Type  Mode    (Gb/s) State    Status       ID
   ----------------- ---- ----- ------- ------ -------- --------- ----
   node1
                     e3a  ENET  storage 100    enabled  online      30
                     e3b  ENET  storage   0    enabled  offline     30
                     e7a  ENET  storage   0    enabled  offline     30
                     e7b  ENET  storage   0    enabled  offline     30
   node2
                     e3a  ENET  storage 100    enabled  online      30
                     e3b  ENET  storage   0    enabled  offline     30
                     e7a  ENET  storage   0    enabled  offline     30
                     e7b  ENET  storage   0    enabled  offline     30
   storage::*>
   ```

9. Verify that both switches are available:

   ```
   network device-discovery show
   ```

   Show example

   ```
   storage::*> network device-discovery show
   Node/     Local Discovered
   Protocol  Port  Device (LLDP: ChassisID)  Interface   Platform
   --------  ----  -----------------------   ---------   ---------
   node1/cdp
             e3a  S1                         Ethernet1/1 NX9336C
             e4a  node2                      e4a         AFF-A700
             e4e  node2                      e4e         AFF-A700
             e7b   NS2                       Ethernet1/1 NX9336C
   node1/lldp
             e3a  S1                         Ethernet1/1 -
             e4a  node2                      e4a         -
             e4e  node2                      e4e         -
             e7b  NS2                        Ethernet1/1 -
   node2/cdp
             e3a  S1                         Ethernet1/2 NX9336C
             e4a  node1                      e4a         AFF-A700
             e4e  node1                      e4e         AFF-A700
             e7b  NS2                        Ethernet1/2 NX9336C
   node2/lldp
             e3a  S1                         Ethernet1/2 -
             e4a  node1                      e4a         -
             e4e  node1                      e4e         -
             e7b  NS2                        Ethernet1/2 -
   storage::*>
   ```

10. Verify the shelf ports in the storage system:

    ```
    storage shelf port show -fields remote-device,remote-port
    ```

Show example

```
storage::*> storage shelf port show -fields remote-device,remote-
port
shelf   id    remote-port     remote-device
-----   --    -----------     -------------
3.20    0     Ethernet1/5     S1
3.20    1     Ethernet1/5     NS2
3.20    2     Ethernet1/6     S1
3.20    3     Ethernet1/6     NS2
3.30    0     Ethernet1/7     S1
3.20    1     Ethernet1/7     NS2
3.30    2     Ethernet1/8     S1
3.20    3     Ethernet1/8     NS2
storage::*>
```

11. If you suppressed automatic case creation, re-enable it by invoking an AutoSupport message:

```
system node autosupport invoke -node * -type all -message MAINT=END
```

What's next?

After you've replaced your switches, you can configure switch health monitoring.

Cisco Nexus 3232C

Get started

Installation and setup workflow for Cisco Nexus 3232C storage switches

The Cisco Nexus 3232C switches are part of the Cisco Nexus 9000 platform and can be installed in a NetApp system cabinet.

Follow these workflow steps to install and setup your to Cisco 3232C switches.

1. **Review the configuration requirements**

Review the configuration requirements for the 3232C storage switches.

2. **Review the required documentation**

Review specific switch and controller documentation to set up your 3232C switches and the ONTAP cluster.

3. **Review the Smart Call Home requirements**

Review the requirements for the Cisco Smart Call Home feature, used to monitor the hardware and software components on your network.

4 Install the hardware

Install the switch hardware.

5 Configure the software

Configure the switch software.

Configuration requirements for Cisco Nexus 3232C storage switches

For Cisco Nexus 3232C switch installation and maintenance, be sure to review configuration and network requirements.

Configuration requirements

You need the appropriate number and type of cables and cable connectors for your switches. Depending on the type of switch you are initially configuring, you need to connect to the switch console port with the included console cable; you also need to provide specific network information.

Network requirements

You need the following network information for all switch configurations:

- IP subnet for management network traffic
- Host names and IP addresses for each of the storage system controllers and all applicable switches
- Most storage system controllers are managed through the e0M interface by connecting to the Ethernet service port (wrench icon). On AFF A800 and AFF A700 systems, the e0M interface uses a dedicated Ethernet port.

Refer to the Hardware Universe for the latest information. See What additional information do I need to install my equipment that is not in HWU? for more information about switch installation requirements.

What's next

After you've confirmed your configuration requirements, you can review the required documentation.

Documentation requirements for Cisco Nexus 3232C storage switches

For Cisco Nexus 3232C switch installation and maintenance, be sure to review all recommended documentation.

Switch documentation

To set up the Cisco Nexus 3232C switches, you need the following documentation from the Cisco Nexus 3000 Series Switches Support page.

Document title	Description
Nexus 3000 Series Hardware Installation Guide	Provides detailed information about site requirements, switch hardware details, and installation options.
Cisco Nexus 3000 Series Switch Software Configuration Guides (choose the guide for the NX-OS release installed on your switches)	Provides initial switch configuration information that you need before you can configure the switch for ONTAP operation.
Cisco Nexus 3000 Series NX-OS Software Upgrade and Downgrade Guide (choose the guide for the NX-OS release installed on your switches)	Provides information on how to downgrade the switch to ONTAP supported switch software, if necessary.
Cisco Nexus 3000 Series NX-OS Command Reference Master Index	Provides links to the various command references provided by Cisco.
Cisco Nexus 3000 MIBs Reference	Describes the Management Information Base (MIB) files for the Nexus 3000 switches.
Nexus 3000 Series NX-OS System Message Reference	Describes the system messages for Cisco Nexus 3000 series switches, those that are informational, and others that might help diagnose problems with links, internal hardware, or the system software.
Cisco Nexus 3000 Series NX-OS Release Notes (choose the notes for the NX-OS release installed on your switches)	Describes the features, bugs, and limitations for the Cisco Nexus 3000 Series.
Regulatory, Compliance, and Safety Information for the Cisco Nexus 6000, Cisco Nexus 5000 Series, Cisco Nexus 3000 Series, and Cisco Nexus 2000 Series	Provides international agency compliance, safety, and statutory information for the Nexus 3000 series switches.

ONTAP systems documentation

To set up an ONTAP system, you need the following documents for your version of the operating system from ONTAP 9.

Name	Description
Controller-specific *Installation and Setup Instructions*	Describes how to install NetApp hardware.
ONTAP documentation	Provides detailed information about all aspects of the ONTAP releases.

Name	Description
Hardware Universe	Provides NetApp hardware configuration and compatibility information.

Rail kit and cabinet documentation

To install a 3232C Cisco switch in a NetApp cabinet, see the following hardware documentation.

Name	Description
42U System Cabinet, Deep Guide	Describes the FRUs associated with the 42U system cabinet, and provides maintenance and FRU replacement instructions.
Install a Cisco Nexus 3232C switch in a NetApp Cabinet	Describes how to install a Cisco Nexus 3232C switch in a four-post NetApp cabinet.

Smart Call Home requirements

To use Smart Call Home, you must configure a cluster network switch to communicate using email with the Smart Call Home system. In addition, you can optionally set up your cluster network switch to take advantage of Cisco's embedded Smart Call Home support feature.

Smart Call Home monitors the hardware and software components on your network. When a critical system configuration occurs, it generates an email-based notification and raises an alert to all the recipients that are configured in your destination profile.

Smart Call Home monitors the hardware and software components on your network. When a critical system configuration occurs, it generates an email-based notification and raises an alert to all the recipients that are configured in your destination profile.

Before you can use Smart Call Home, be aware of the following requirements:

- An email server must be in place.
- The switch must have IP connectivity to the email server.
- The contact name (SNMP server contact), phone number, and street address information must be configured. This is required to determine the origin of messages received.
- A CCO ID must be associated with an appropriate Cisco SMARTnet Service contract for your company.
- Cisco SMARTnet Service must be in place for the device to be registered.

The Cisco support site contains information about the commands to configure Smart Call Home.

Install hardware

Hardware install workflow for Cisco Nexus 3232C switches

To install and configure the hardware for a 3232C storage switch, follow these steps:

1 Install the switch

Install the 3232C storage switch.

2 Install the switch in a NetApp cabinet

Install the 3232C storage switch and pass-through panel in a NetApp cabinet as required.

Install the 3232C storage switch

Follow this procedure to set up and configure the Cisco Nexus 3232C storage switch.

Before you begin

Make sure you have the following:

- Access to an HTTP, FTP, or TFTP server at the installation site to download the applicable NX-OS and Reference Configuration File (RCF) releases.
- Applicable NX-OS version, downloaded from the Cisco Software Download page.
- Applicable licenses, network and configuration information, and cables.
- Applicable NetApp cluster network and management network RCFs downloaded from the NetApp Support Site at mysupport.netapp.com. All Cisco cluster network and management network switches arrive with the standard Cisco factory-default configuration. These switches also have the current version of the NX-OS software but do not have the RCFs loaded.
- Required switch and ONTAP documentation.

Steps

1. Rack the cluster network and management network switches and controllers.

If you are installing the…	Then…
Cisco Nexus 3232C in a NetApp system cabinet	See the *Installing a Cisco Nexus 3232C cluster switch and pass-through panel in a NetApp cabinet* guide for instructions to install the switch in a NetApp cabinet.
Equipment in a Telco rack	See the procedures provided in the switch hardware installation guides and the NetApp installation and setup instructions.

2. Cable the cluster network and management network switches to the controllers using the completed cabling worksheets.
3. Power on the cluster network and management network switches and controllers.

What's next?

After you've installed the 3232C storage switch, you can then install the switch in a NetApp cabinet.

Install a Cisco Nexus 3232C storage switch in a NetApp cabinet

Depending on your configuration, you might need to install the Cisco Nexus 3232C storage switch and pass-through panel in a NetApp cabinet with the standard brackets

that are included with the switch.

Before you begin

Verify that you have the following:
* The initial preparation requirements, kit contents, and safety precautions in the Cisco Nexus 3000 Series Hardware Installation Guide.
* For each switch, the eight 10-32 or 12-24 screws and clip nuts to mount the brackets and slider rails to the front and rear cabinet posts.
* Cisco standard rail kit to install the switch in a NetApp cabinet.

> The jumper cords are not included with the pass-through kit and should be included with your switches. If they were not shipped with the switches, you can order them from NetApp (part number X1558A-R6).

Steps

1. Install the pass-through blanking panel in the NetApp cabinet.

   The pass-through panel kit is available from NetApp (part number X8784-R6).

   The NetApp pass-through panel kit contains the following hardware:

   - One pass-through blanking panel
   - Four 10-32 x .75 screws
   - Four 10-32 clip nuts

   a. Determine the vertical location of the switches and blanking panel in the cabinet.

      In this procedure, the blanking panel will be installed in U40.

   b. Install two clip nuts on each side in the appropriate square holes for front cabinet rails.

   c. Center the panel vertically to prevent intrusion into adjacent rack space, and then tighten the screws.

   d. Insert the female connectors of both 48-inch jumper cords from the rear of the panel and through the brush assembly.

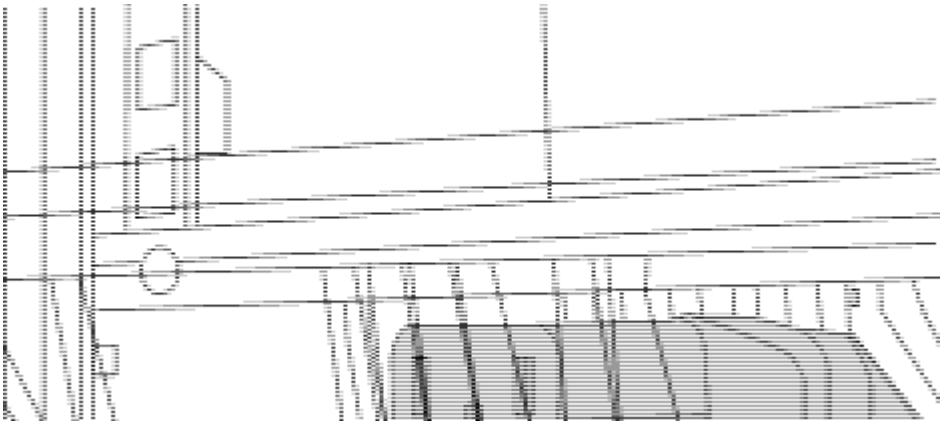

(1) Female connector of the jumper cord.

1. Install the rack-mount brackets on the Nexus 3232C storage switch chassis.

a. Position a front rack-mount bracket on one side of the switch chassis so that the mounting ear is aligned with the chassis faceplate (on the PSU or fan side), and then use four M4 screws to attach the bracket to the chassis.

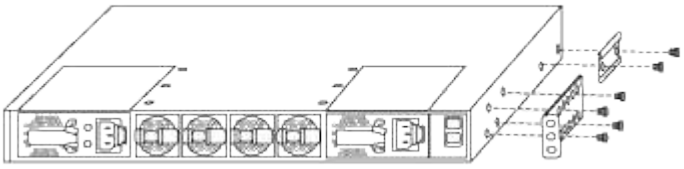

b. Repeat step 2a with the other front rack-mount bracket on the other side of the switch.

c. Install the rear rack-mount bracket on the switch chassis.

d. Repeat step 2c with the other rear rack-mount bracket on the other side of the switch.

2. Install the clip nuts in the square hole locations for all four IEA posts.

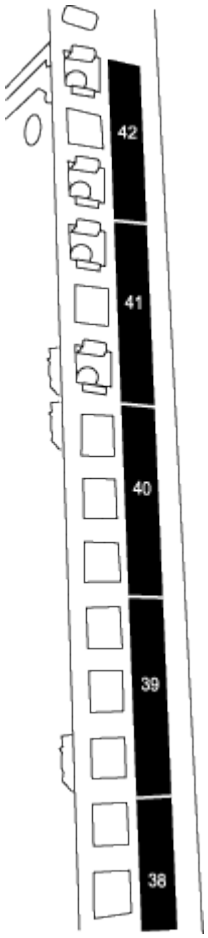

The two 3232C switches will always be mounted in the top 2U of the cabinet RU41 and 42.

3. Install the slider rails in the cabinet.

a. Position the first slider rail at the RU42 mark on the back side of the rear left post, insert screws with the matching thread type, and then tighten the screws with your fingers.

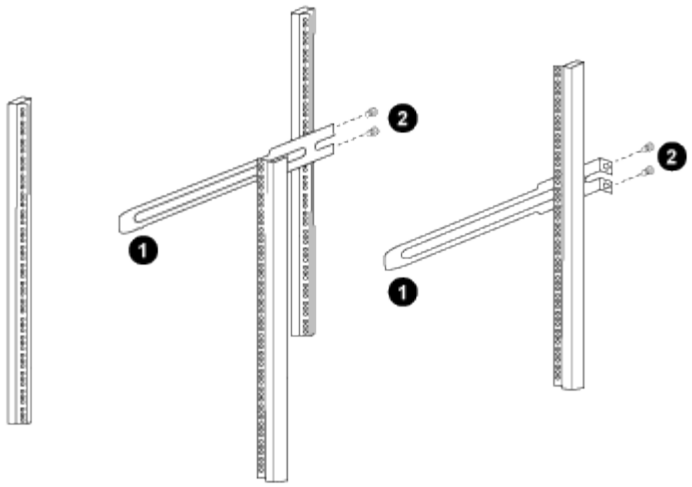

(1) As you gently slide the slider rail, align it to the screw holes in the rack.

(2) Tighten the screws of the slider rails to the cabinet posts.

b. Repeat step 4a for the right side rear post.

c. Repeat steps 4a and 4b at the RU41 locations on the cabinet.

4. Install the switch in the cabinet.

> This step requires two people: one person to support the switch from the front and another to guide the switch into the rear slider rails.

a. Position the back of the switch at RU41.

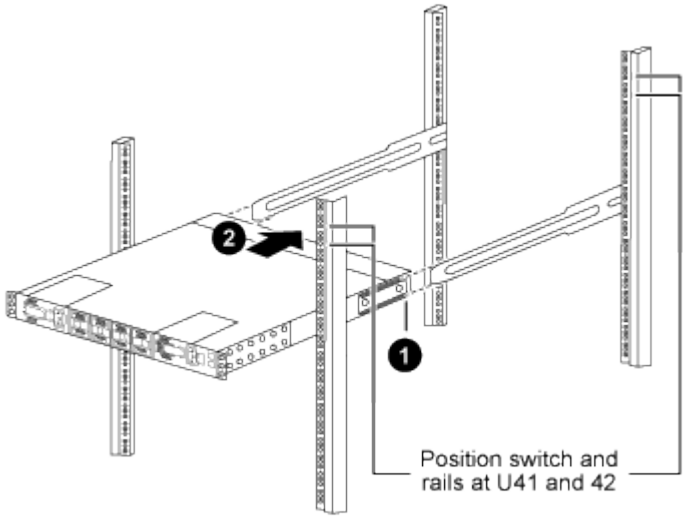

(1) As the chassis is pushed toward the rear posts, align the two rear rack-mount guides with the slider rails.

(2) Gently slide the switch until the front rack-mount brackets are flush with the front posts.

b. Attach the switch to the cabinet.

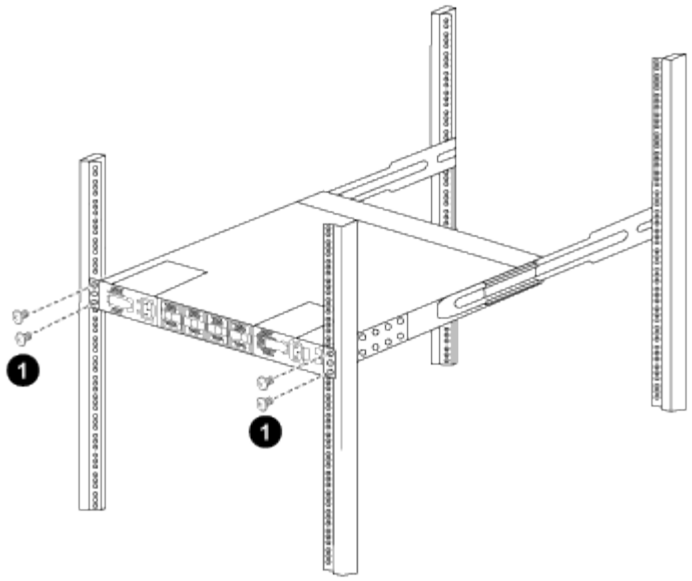

(1) With one person holding the front of the chassis level, the other person should fully tighten the four rear screws to the cabinet posts.

c. With the chassis now supported without assistance, fully tighten the front screws to the posts.

d. Repeat steps 5a through 5c for the second switch at the RU42 location.

> By using the fully installed switch as a support, it is not necessary to hold the front of the second switch during the installation process.

5. When the switches are installed, connect the jumper cords to the switch power inlets.
6. Connect the male plugs of both jumper cords to the closest available PDU outlets.

> To maintain redundancy, the two cords must be connected to different PDUs.

7. Connect the management port on each 3232C switch to either of the management switches (if ordered) or connect them directly to your management network.

   The management port is the upper-right port located on the PSU side of the switch. The CAT6 cable for each switch needs to be routed through the pass-through panel after the switches are installed to connect to the management switches or management network.

Configure software

Software install workflow for Cisco Nexus 3232C storage switches

To install and configure the software for a Cisco Nexus 3232C switch and install or upgrade the Reference Configuration File (RCF), follow these steps:

1. **Configure the switch**

Configure the 3232C storage switch.

2 Prepare to install the NX-OS software and RCF

The Cisco NX-OS software and reference configuration files (RCFs) must be installed on Cisco 3232C storage switches.

3 Install the NX-OS software

Download and install or upgrade the NX-OS software on the Cisco 3232C storage switch.

4 Install the RCF

Install the RCF after setting up the Cisco 3232C storage switch for the first time.

5 Verify SSH configuration

Verify that SSH is enabled on the switches to use the Ethernet Switch Health Monitor (CSHM) and log collection features.

6 Reset the switch to factory defaults

Erase the 3232C storage switch settings.

Configure the 3232C storage switch

Follow this procedure to set up and configure the Cisco Nexus 3232C switch.

Before you begin

- Access to an HTTP, FTP or TFTP server at the installation site to download the applicable NX-OS and reference configuration file (RCF) releases.
- Applicable NX-OS version, downloaded from the Cisco software download page.
- Required cluster network and management network switch documentation.

  See Required documentation for more information.

- Required controller documentation and ONTAP documentation.

  NetApp documentation

- Applicable licenses, network and configuration information, and cables.
- Completed cabling worksheets.
- Applicable NetApp cluster network and management network RCFs, downloaded from the NetApp Support Site at mysupport.netapp.com for the switches that you receive. All Cisco cluster network and management network switches arrive with the standard Cisco factory-default configuration. These switches also have the current version of the NX-OS software, but do not have the RCFs loaded.

Steps

1. Rack the cluster network and management network switches and controllers.

If you are installing your…	Then…
Cisco Nexus 3232C in a NetApp system cabinet	See the *Installing a Cisco Nexus 3232C switch and pass-through panel in a NetApp cabinet* guide for instructions to install the switch in a NetApp cabinet.
Equipment in a Telco rack	See the procedures provided in the switch hardware installation guides and the NetApp installation and setup instructions.

2. Cable the cluster network and management network switches to the controllers using the completed cabling worksheets.
3. Power on the cluster network and management network switches and controllers.
4. Perform an initial configuration of the cluster network switches.

   Provide applicable responses to the following initial setup questions when you first boot the switch. Your site's security policy defines the responses and services to enable.

Prompt	Response
Abort Auto Provisioning and continue with normal setup? (yes/no)	Respond with **yes**. The default is no.
Do you want to enforce secure password standard? (yes/no)	Respond with **yes**. The default is yes.
Enter the password for admin.	The default password is "admin"; you must create a new, strong password. A weak password can be rejected.
Would you like to enter the basic configuration dialog? (yes/no)	Respond with **yes** at the initial configuration of the switch.
Create another login account? (yes/no)	Your answer depends on your site's policies on alternate administrators. The default is **no**.
Configure read-only SNMP community string? (yes/no)	Respond with **no**. The default is no.
Configure read-write SNMP community string? (yes/no)	Respond with **no**. The default is no.
Enter the switch name.	The switch name is limited to 63 alphanumeric characters.
Continue with Out-of-band (mgmt0) management configuration? (yes/no)	Respond with **yes** (the default) at that prompt. At the mgmt0 IPv4 address: prompt, enter your IP address: ip_address.

Prompt	Response
Configure the default-gateway? (yes/no)	Respond with **yes**. At the IPv4 address of the default-gateway: prompt, enter your default_gateway.
Configure advanced IP options? (yes/no)	Respond with **no**. The default is no.
Enable the telnet service? (yes/no)	Respond with **no**. The default is no.
Enabled SSH service? (yes/no)	Respond with **yes**. The default is yes. SSH is recommended when using Ethernet Switch Health Monitor (CSHM) for its log collection features. SSHv2 is also recommended for enhanced security.
Enter the type of SSH key you want to generate (dsa/rsa/rsa1).	The default is **rsa**.
Enter the number of key bits (1024-2048).	Enter the number of key bits from 1024-2048.
Configure the NTP server? (yes/no)	Respond with **no**. The default is no.
Configure default interface layer (L3/L2):	Respond with **L2**. The default is L2.
Configure default switch port interface state (shut/noshut):	Respond with **noshut**. The default is noshut.
Configure CoPP system profile (strict/moderate/lenient/dense):	Respond with **strict**. The default is strict.
Would you like to edit the configuration? (yes/no)	You should see the new configuration at this point. Review and make any necessary changes to the configuration you just entered. Respond with **no** at the prompt if you are satisfied with the configuration. Respond with **yes** if you want to edit your configuration settings.
Use this configuration and save it? (yes/no)	Respond with **yes** to save the configuration. This automatically updates the kickstart and system images. If you do not save the configuration at this stage, none of the changes will be in effect the next time you reboot the switch.

5. Verify the configuration choices you made in the display that appears at the end of the setup, and make sure that you save the configuration.
6. Check the version on the cluster network switches, and if necessary, download the NetApp-supported version of the software to the switches from the Cisco software download page.

What's next?

After you've configured your switches, you can prepare to install the NX-OS and RCF.

Prepare to install NX-OS software and Reference Configuration File (RCF)

Before you install the NX-OS software and the Reference Configuration File (RCF), follow this procedure.

About the examples

The examples in this procedure use two nodes. These nodes use two 10GbE cluster interconnect ports `e0a` and `e0b`.

See the Hardware Universe to verify the correct cluster ports on your platforms. See What additional information do I need to install my equipment that is not in HWU? for more information about switch installation requirements.

> The command outputs might vary depending on different releases of ONTAP.

Switch and node nomenclature

The examples in this procedure use the following switch and node nomenclature:

- The names of the two Cisco switches are `cs1` and `cs2`.
- The node names are `cluster1-01` and `cluster1-02`.
- The cluster LIF names are `cluster1-01_clus1` and `cluster1-01_clus2` for cluster1-01 and `cluster1-02_clus1` and `cluster1-02_clus2` for cluster1-02.
- The `cluster1::*>` prompt indicates the name of the cluster.

About this task

The procedure requires the use of both ONTAP commands and Cisco Nexus 3000 Series Switches commands; ONTAP commands are used unless otherwise indicated.

Steps

1. If AutoSupport is enabled on this cluster, suppress automatic case creation by invoking an AutoSupport message:
   `system node autosupport invoke -node * -type all -message MAINT=x h`

   where *x* is the duration of the maintenance window in hours.

   > The AutoSupport message notifies technical support of this maintenance task so that automatic case creation is suppressed during the maintenance window.

2. Change the privilege level to advanced, entering **y** when prompted to continue:

   `set -privilege advanced`

The advanced prompt (`*>`) appears.

3. Display how many cluster interconnect interfaces are configured in each node for each cluster interconnect switch:

   ```
   network device-discovery show -protocol cdp
   ```

   Show example

   ```
   cluster1::*> network device-discovery show -protocol cdp

   Node/       Local  Discovered
   Protocol    Port   Device (LLDP: ChassisID)  Interface
   Platform
   ----------- ------ ------------------------- -----------------
   --------
   cluster1-02/cdp
               e0a    cs1                       Eth1/2            N3K-
   C3232C
               e0b    cs2                       Eth1/2            N3K-
   C3232C
   cluster1-01/cdp
               e0a    cs1                       Eth1/1            N3K-
   C3232C
               e0b    cs2                       Eth1/1            N3K-
   C3232C

   4 entries were displayed.
   ```

4. Check the administrative or operational status of each cluster interface.

   a. Display the network port attributes:

      ```
      network port show -ipspace Cluster
      ```

Show example

```
cluster1::*> network port show -ipspace Cluster

Node: cluster1-02
                                                  Speed(Mbps)
Health
Port      IPspace      Broadcast Domain Link MTU  Admin/Oper
Status
--------- ------------ ---------------- ---- ---- -----------
------
e0a       Cluster      Cluster          up   9000  auto/10000
healthy
e0b       Cluster      Cluster          up   9000  auto/10000
healthy

Node: cluster1-01
                                                  Speed(Mbps)
Health
Port      IPspace      Broadcast Domain Link MTU  Admin/Oper
Status
--------- ------------ ---------------- ---- ---- -----------
------
e0a       Cluster      Cluster          up   9000  auto/10000
healthy
e0b       Cluster      Cluster          up   9000  auto/10000
healthy

4 entries were displayed.
```

b. Display information about the LIFs:
`network interface show -vserver Cluster`

Show example

```
cluster1::*> network interface show -vserver Cluster

            Logical            Status     Network
Current       Current Is
Vserver     Interface          Admin/Oper Address/Mask       Node
Port    Home
----------- ------------------ ---------- ------------------
------------ ------- ----
Cluster
            cluster1-01_clus1  up/up      169.254.209.69/16
cluster1-01   e0a     true
            cluster1-01_clus2  up/up      169.254.49.125/16
cluster1-01   e0b     true
            cluster1-02_clus1  up/up      169.254.47.194/16
cluster1-02   e0a     true
            cluster1-02_clus2  up/up      169.254.19.183/16
cluster1-02   e0b     true

4 entries were displayed.
```

5. Verify the connectivity of the remote cluster interfaces:

ONTAP 9.9.1 and later

You can use the `network interface check cluster-connectivity` command to start an accessibility check for cluster connectivity and then display the details:

`network interface check cluster-connectivity start` and `network interface check cluster-connectivity show`

```
cluster1::*> network interface check cluster-connectivity start
```

NOTE: Wait for a number of seconds before running the `show` command to display the details.

```
cluster1::*> network interface check cluster-connectivity show
                                  Source              Destination
Packet
Node   Date                       LIF                 LIF
Loss
------ -------------------------- ------------------- -------------------
------------ -----------
cluster1-01
       3/5/2022 19:21:18 -06:00   cluster1-01_clus2   cluster1-02_clus1
none
       3/5/2022 19:21:20 -06:00   cluster1-01_clus2   cluster1-02_clus2
none
.
.
cluster1-02
       3/5/2022 19:21:18 -06:00   cluster1-02_clus2   cluster1-01_clus1
none
       3/5/2022 19:21:20 -06:00   cluster1-02_clus2   cluster1-01_clus2
none
```

All ONTAP releases

For all ONTAP releases, you can also use the `cluster ping-cluster -node <name>` command to check the connectivity:

```
cluster ping-cluster -node <name>
```

```
cluster1::*> cluster ping-cluster -node local
Host is cluster1-02
Getting addresses from network interface table...
Cluster cluster1-01_clus1 169.254.209.69 cluster1-01     e0a
Cluster cluster1-01_clus2 169.254.49.125 cluster1-01     e0b
Cluster cluster1-02_clus1 169.254.47.194 cluster1-02     e0a
Cluster cluster1-02_clus2 169.254.19.183 cluster1-02     e0b
Local = 169.254.47.194 169.254.19.183
Remote = 169.254.209.69 169.254.49.125
Cluster Vserver Id = 4294967293
Ping status:....
Basic connectivity succeeds on 4 path(s)
Basic connectivity fails on 0 path(s)
................
Detected 9000 byte MTU on 4 path(s):
    Local 169.254.19.183 to Remote 169.254.209.69
    Local 169.254.19.183 to Remote 169.254.49.125
    Local 169.254.47.194 to Remote 169.254.209.69
    Local 169.254.47.194 to Remote 169.254.49.125
Larger than PMTU communication succeeds on 4 path(s)
RPC status:
2 paths up, 0 paths down (tcp check)
2 paths up, 0 paths down (udp check)
```

6. Verify that the `auto-revert` command is enabled on all cluster LIFs:
`network interface show -vserver Cluster -fields auto-revert`

Show example

```
cluster1::*> network interface show -vserver Cluster -fields auto-
revert

          Logical
Vserver   Interface           Auto-revert
--------- ------------------- ------------
Cluster
          cluster1-01_clus1   true
          cluster1-01_clus2   true
          cluster1-02_clus1   true
          cluster1-02_clus2   true
4 entries were displayed.
```

What's next?

After you've prepared to install the NX-OS software and RCF, you can install the NX-OS software.

Install the NX-OS software

You can use this procedure to install the NX-OS software on the Nexus 3232C storage switch.

Review requirements

Before you begin

Verify that you have the following:
* A current backup of the switch configuration.
* A fully functioning cluster (no errors in the logs or similar issues).
* Cisco Ethernet switch page. Consult the switch compatibility table for the supported ONTAP and NX-OS versions.
* Cisco Nexus 3000 Series Switches. Refer to the appropriate software and upgrade guides available on the Cisco web site for complete documentation on the Cisco switch upgrade and downgrade procedures.

Install the software

The procedure requires the use of both ONTAP commands and Cisco Nexus 3000 Series Switches commands; ONTAP commands are used unless otherwise indicated.

Complete the procedure in Prepare to install NX-OS and RCF, and then follow the steps below.

Steps

1. Connect the cluster switch to the management network.
2. Use the `ping` command to verify connectivity to the server hosting the NX-OS software and the RCF.

   Show example

   This example verifies that the switch can reach the server at IP address 172.19.2.1:

   ```
   cs2# ping 172.19.2.1
   Pinging 172.19.2.1 with 0 bytes of data:

   Reply From 172.19.2.1: icmp_seq = 0. time= 5910 usec.
   ```

3. Display the cluster ports on each node that are connected to the cluster switches:

   ```
   network device-discovery show
   ```

Show example

```
cluster1::*> network device-discovery show
Node/       Local  Discovered
Protocol    Port   Device (LLDP: ChassisID)  Interface
Platform
----------- ------ ------------------------- ----------------
----------
cluster1-01/cdp
            e0a    cs1                       Ethernet1/7       N3K-
C3232C
            e0d    cs2                       Ethernet1/7       N3K-
C3232C
cluster1-02/cdp
            e0a    cs1                       Ethernet1/8       N3K-
C3232C
            e0d    cs2                       Ethernet1/8       N3K-
C3232C
cluster1-03/cdp
            e0a    cs1                       Ethernet1/1/1     N3K-
C3232C
            e0b    cs2                       Ethernet1/1/1     N3K-
C3232C
cluster1-04/cdp
            e0a    cs1                       Ethernet1/1/2     N3K-
C3232C
            e0b    cs2                       Ethernet1/1/2     N3K-
C3232C
cluster1::*>
```

4. Check the administrative and operational status of each cluster port.
   a. Verify that all the cluster ports are **up** with a healthy status:

      ```
      network port show -role cluster
      ```

Show example

```
cluster1::*> network port show -role cluster

Node: cluster1-01

Ignore
                                                        Speed(Mbps)
Health   Health
Port      IPspace      Broadcast Domain Link MTU  Admin/Oper
Status   Status
--------- ------------ ---------------- ---- ---- -----------
-------- ------
e0a       Cluster      Cluster          up   9000  auto/100000
healthy false
e0d       Cluster      Cluster          up   9000  auto/100000
healthy false

Node: cluster1-02

Ignore
                                                        Speed(Mbps)
Health   Health
Port      IPspace      Broadcast Domain Link MTU  Admin/Oper
Status   Status
--------- ------------ ---------------- ---- ---- -----------
-------- ------
e0a       Cluster      Cluster          up   9000  auto/100000
healthy false
e0d       Cluster      Cluster          up   9000  auto/100000
healthy false
8 entries were displayed.

Node: cluster1-03

   Ignore
                                                        Speed(Mbps)
Health   Health
Port      IPspace      Broadcast Domain Link MTU  Admin/Oper
Status   Status
--------- ------------ ---------------- ---- ---- -----------
-------- ------
e0a       Cluster      Cluster          up   9000  auto/10000
healthy  false
e0b       Cluster      Cluster          up   9000  auto/10000
healthy  false
```

```
Node: cluster1-04

Ignore
                                                          Speed(Mbps)
Health   Health
Port      IPspace      Broadcast Domain Link MTU  Admin/Oper
Status   Status
--------- ------------ ---------------- ---- ---- -----------
-------- ------
e0a       Cluster      Cluster          up   9000  auto/10000
healthy  false
e0b       Cluster      Cluster          up   9000  auto/10000
healthy  false
cluster1::*>
```

b. Verify that all the cluster interfaces (LIFs) are on the home port:

```
network interface show -role cluster
```

Show example

```
cluster1::*> network interface show -role cluster
            Logical            Status     Network
Current      Current Is
Vserver     Interface          Admin/Oper Address/Mask      Node
Port    Home
----------- ------------------ ---------- -----------------
------------ ------- ----
Cluster
            cluster1-01_clus1  up/up     169.254.3.4/23
cluster1-01  e0a     true
            cluster1-01_clus2  up/up     169.254.3.5/23
cluster1-01  e0d     true
            cluster1-02_clus1  up/up     169.254.3.8/23
cluster1-02  e0a     true
            cluster1-02_clus2  up/up     169.254.3.9/23
cluster1-02  e0d     true
            cluster1-03_clus1  up/up     169.254.1.3/23
cluster1-03  e0a     true
            cluster1-03_clus2  up/up     169.254.1.1/23
cluster1-03  e0b     true
            cluster1-04_clus1  up/up     169.254.1.6/23
cluster1-04  e0a     true
            cluster1-04_clus2  up/up     169.254.1.7/23
cluster1-04  e0b     true
8 entries were displayed.
cluster1::*>
```

c. Verify that the cluster displays information for both cluster switches:

```
system cluster-switch show -is-monitoring-enabled-operational true
```

Show example

```
cluster1::*> system cluster-switch show -is-monitoring-enabled
-operational true
Switch                      Type               Address
Model
--------------------------- ------------------ ----------------
----------
cs1                         cluster-network    10.233.205.90
N3K-C3232C
     Serial Number: FOCXXXXXXGD
      Is Monitored: true
            Reason: None
  Software Version: Cisco Nexus Operating System (NX-OS)
Software, Version
                    9.3(5)
    Version Source: CDP

cs2                         cluster-network    10.233.205.91
N3K-C3232C
     Serial Number: FOCXXXXXXGS
      Is Monitored: true
            Reason: None
  Software Version: Cisco Nexus Operating System (NX-OS)
Software, Version
                    9.3(5)
    Version Source: CDP
cluster1::*>
```

5. Disable auto-revert on the cluster LIFs. The cluster LIFs fail over to the partner cluster switch and remain there as you perform the upgrade procedure on the targeted switch:

   ```
   network interface modify -vserver Cluster -lif * -auto-revert false
   ```

6. Copy the NX-OS software and EPLD images to the Nexus 3232C switch.

Show example

```
cs2# copy sftp: bootflash: vrf management
Enter source filename: /code/nxos.9.3.4.bin
Enter hostname for the sftp server: 172.19.2.1
Enter username: user1

Outbound-ReKey for 172.19.2.1:22
Inbound-ReKey for 172.19.2.1:22
user1@172.19.2.1's password:
sftp> progress
Progress meter enabled
sftp> get   /code/nxos.9.3.4.bin  /bootflash/nxos.9.3.4.bin
/code/nxos.9.3.4.bin  100% 1261MB   9.3MB/s   02:15
sftp> exit
Copy complete, now saving to disk (please wait)...
Copy complete.


cs2# copy sftp: bootflash: vrf management
Enter source filename: /code/n9000-epld.9.3.4.img
Enter hostname for the sftp server: 172.19.2.1
Enter username: user1

Outbound-ReKey for 172.19.2.1:22
Inbound-ReKey for 172.19.2.1:22
user1@172.19.2.1's password:
sftp> progress
Progress meter enabled
sftp> get   /code/n9000-epld.9.3.4.img  /bootflash/n9000-
epld.9.3.4.img
/code/n9000-epld.9.3.4.img  100%  161MB   9.5MB/s   00:16
sftp> exit
Copy complete, now saving to disk (please wait)...
Copy complete.
```

7. Verify the running version of the NX-OS software:

   ```
   show version
   ```

Show example

```
cs2# show version
Cisco Nexus Operating System (NX-OS) Software
TAC support: http://www.cisco.com/tac
Copyright (C) 2002-2019, Cisco and/or its affiliates.
All rights reserved.
The copyrights to certain works contained in this software are
owned by other third parties and used and distributed under their
own
licenses, such as open source.  This software is provided "as is,"
and unless
otherwise stated, there is no warranty, express or implied,
including but not
limited to warranties of merchantability and fitness for a
particular purpose.
Certain components of this software are licensed under
the GNU General Public License (GPL) version 2.0 or
GNU General Public License (GPL) version 3.0  or the GNU
Lesser General Public License (LGPL) Version 2.1 or
Lesser General Public License (LGPL) Version 2.0.
A copy of each such license is available at
http://www.opensource.org/licenses/gpl-2.0.php and
http://opensource.org/licenses/gpl-3.0.html and
http://www.opensource.org/licenses/lgpl-2.1.php and
http://www.gnu.org/licenses/old-licenses/library.txt.

Software
  BIOS: version 08.37
  NXOS: version 9.3(3)
  BIOS compile time:  01/28/2020
  NXOS image file is: bootflash:///nxos.9.3.3.bin
  NXOS compile time:  12/22/2019 2:00:00 [12/22/2019 14:00:37]

Hardware
  cisco Nexus3000 C3232C Chassis (Nexus 9000 Series)
  Intel(R) Xeon(R) CPU E5-2403 v2 @ 1.80GHz with 8154432 kB of
memory.
  Processor Board ID FOCXXXXXXGD

  Device name: cs2
  bootflash:   53298520 kB
Kernel uptime is 0 day(s), 0 hour(s), 3 minute(s), 36 second(s)

Last reset at 74117 usecs after Tue Nov 24 06:24:23 2020
  Reason: Reset Requested by CLI command reload
```

```
  System version: 9.3(3)
  Service:

plugin
  Core Plugin, Ethernet Plugin

Active Package(s):

cs2#
```

8. Install the NX-OS image.

   Installing the image file causes it to be loaded every time the switch is rebooted.

Show example

```
cs2# install all nxos bootflash:nxos.9.3.4.bin
Installer will perform compatibility check first. Please wait.
Installer is forced disruptive

Verifying image bootflash:/nxos.9.3.4.bin for boot variable "nxos".
[] 100% -- SUCCESS

Verifying image type.
[] 100% -- SUCCESS

Preparing "nxos" version info using image bootflash:/nxos.9.3.4.bin.
[] 100% -- SUCCESS

Preparing "bios" version info using image bootflash:/nxos.9.3.4.bin.
[] 100% -- SUCCESS

Performing module support checks.
[] 100% -- SUCCESS

Notifying services about system upgrade.
[] 100% -- SUCCESS


Compatibility check is done:
Module  bootable          Impact              Install-type  Reason
------- ----------------- ------------------- -------------
----------
     1     Yes            Disruptive          Reset         Default
upgrade is not hitless


Images will be upgraded according to following table:
Module       Image       Running-Version(pri:alt)
New-Version          Upg-Required
------------ ----------- ----------------------------------------
-------------------- ------------
     1       nxos        9.3(3)
9.3(4)               yes
     1       bios        v08.37(01/28/2020):v08.32(10/18/2016)
v08.37(01/28/2020)   no


Switch will be reloaded for disruptive upgrade.
Do you want to continue with the installation (y/n)?  [n] y
```

```
Install is in progress, please wait.

Performing runtime checks.
[] 100% -- SUCCESS

Setting boot variables.
[] 100% -- SUCCESS

Performing configuration copy.
[] 100% -- SUCCESS

Module 1: Refreshing compact flash and upgrading
bios/loader/bootrom.
Warning: please do not remove or power off the module at this time.
[] 100% -- SUCCESS


Finishing the upgrade, switch will reboot in 10 seconds.
cs2#
```

9. Verify the new version of NX-OS software after the switch has rebooted:

   ```
   show version
   ```

Show example

```
cs2# show version
Cisco Nexus Operating System (NX-OS) Software
TAC support: http://www.cisco.com/tac
Copyright (C) 2002-2020, Cisco and/or its affiliates.
All rights reserved.
The copyrights to certain works contained in this software are
owned by other third parties and used and distributed under their
own
licenses, such as open source.  This software is provided "as is,"
and unless
otherwise stated, there is no warranty, express or implied,
including but not
limited to warranties of merchantability and fitness for a
particular purpose.
Certain components of this software are licensed under
the GNU General Public License (GPL) version 2.0 or
GNU General Public License (GPL) version 3.0  or the GNU
Lesser General Public License (LGPL) Version 2.1 or
Lesser General Public License (LGPL) Version 2.0.
A copy of each such license is available at
http://www.opensource.org/licenses/gpl-2.0.php and
http://opensource.org/licenses/gpl-3.0.html and
http://www.opensource.org/licenses/lgpl-2.1.php and
http://www.gnu.org/licenses/old-licenses/library.txt.

Software
  BIOS: version 08.37
  NXOS: version 9.3(4)
  BIOS compile time:  01/28/2020
  NXOS image file is: bootflash:///nxos.9.3.4.bin
  NXOS compile time:  4/28/2020 21:00:00 [04/29/2020 06:28:31]

Hardware
 cisco Nexus3000 C3232C Chassis (Nexus 9000 Series)
  Intel(R) Xeon(R) CPU E5-2403 v2 @ 1.80GHz with 8154432 kB of
memory.
  Processor Board ID FOCXXXXXXGS

  Device name: rtpnpi-mcc01-8200-ms-A1
  bootflash:   53298520 kB
Kernel uptime is 0 day(s), 0 hour(s), 3 minute(s), 14 second(s)

Last reset at 196755 usecs after Tue Nov 24 06:37:36 2020
  Reason: Reset due to upgrade
```

```
  System version: 9.3(3)
  Service:

plugin
  Core Plugin, Ethernet Plugin

Active Package(s):

cs2#
```

10. Upgrade the EPLD image and reboot the switch.

Show example

```
cs2# show version module 1 epld

EPLD Device                          Version
---------------------------------------
MI   FPGA                            0x12
IO   FPGA                            0x11

cs2# install epld bootflash:n9000-epld.9.3.4.img module 1
Compatibility check:
Module        Type         Upgradable    Impact      Reason
------  -----------------  ----------    ----------
-----------------
     1         SUP         Yes           Disruptive  Module
Upgradable

Retrieving EPLD versions.... Please wait.
Images will be upgraded according to following table:
Module  Type   EPLD              Running-Version   New-Version  Upg-
Required
------  ----  -----------------  ---------------   -----------
------------
     1   SUP   MI FPGA                0x12         0x12         No
     1   SUP   IO FPGA                0x11         0x12         Yes
The above modules require upgrade.
The switch will be reloaded at the end of the upgrade
Do you want to continue (y/n) ?  [n] y

Proceeding to upgrade Modules.

Starting Module 1 EPLD Upgrade

Module 1 : IO FPGA [Programming] : 100.00% (     64 of      64
sectors)
Module 1 EPLD upgrade is successful.
Module        Type  Upgrade-Result
------  ------------------  --------------
     1         SUP         Success

Module 1 EPLD upgrade is successful.
cs2#
```

11. If you are upgrading to NX-OS version 9.3(11), you must upgrade the EPLD `golden` image and reboot the switch once again. Otherwise, skip to step 12.

See EPLD Upgrade Release Notes, Release 9.3(11) for further details.

Show example

```
cs2# install epld bootflash:n9000-epld.9.3.11.img module 1 golden
Digital signature verification is successful
Compatibility check:
Module        Type         Upgradable     Impact      Reason
------  -----------------  ------------  ----------
-----------------
     1        SUP          Yes            Disruptive  Module
Upgradable

Retrieving EPLD versions.... Please wait.
The above modules require upgrade.
The switch will be reloaded at the end of the upgrade
Do you want to continue (y/n) ?  [n] y

Proceeding to upgrade Modules.

 Starting Module 1 EPLD Upgrade

Module 1 : MI FPGA [Programming] : 100.00% (     64 of      64 sect)
Module 1 : IO FPGA [Programming] : 100.00% (     64 of      64 sect)
Module 1 EPLD upgrade is successful.
Module        Type          Upgrade-Result
------  ------------------  --------------
     1         SUP          Success

EPLDs upgraded.

Module 1 EPLD upgrade is successful.
cs2#
```

12. After the switch reboot, log in to verify that the new version of EPLD loaded successfully.

Show example

```
cs2# show version module 1 epld

EPLD Device                       Version
---------------------------------------
MI   FPGA                          0x12
IO   FPGA                          0x12
```

13. Verify the health of cluster ports on the cluster.
    a. Verify that cluster ports are up and healthy across all nodes in the cluster:

       ```
       network port show -role cluster
       ```

Show example

```
cluster1::*> network port show -role cluster

Node: cluster1-01

Ignore
                                                  Speed(Mbps)
Health   Health
Port      IPspace      Broadcast Domain Link MTU  Admin/Oper
Status   Status
--------- ------------ ---------------- ---- ---- -----------
-------- ------
e0a       Cluster      Cluster          up   9000  auto/10000
healthy  false
e0b       Cluster      Cluster          up   9000  auto/10000
healthy  false

Node: cluster1-02

Ignore
                                                  Speed(Mbps)
Health   Health
Port      IPspace      Broadcast Domain Link MTU  Admin/Oper
Status   Status
--------- ------------ ---------------- ---- ---- -----------
-------- ------
e0a       Cluster      Cluster          up   9000  auto/10000
healthy  false
e0b       Cluster      Cluster          up   9000  auto/10000
healthy  false

Node: cluster1-03

Ignore
                                                  Speed(Mbps)
Health   Health
Port      IPspace      Broadcast Domain Link MTU  Admin/Oper
Status   Status
--------- ------------ ---------------- ---- ---- -----------
-------- ------
e0a       Cluster      Cluster          up   9000  auto/100000
healthy false
e0d       Cluster      Cluster          up   9000  auto/100000
healthy false
```

```
Node: cluster1-04

Ignore
                                                          Speed(Mbps)
Health   Health
Port      IPspace      Broadcast Domain Link MTU  Admin/Oper
Status   Status
--------- ------------ ---------------- ---- ---- -----------
-------- ------
e0a       Cluster      Cluster          up   9000  auto/100000
healthy false
e0d       Cluster      Cluster          up   9000  auto/100000
healthy false
8 entries were displayed.
```

b. Verify the switch health from the cluster.

```
network device-discovery show -protocol cdp
```

Show example

```
cluster1::*> network device-discovery show -protocol cdp
Node/       Local  Discovered
Protocol    Port   Device (LLDP: ChassisID)  Interface
Platform
----------- ------ ------------------------- -----------------
----------
cluster1-01/cdp
            e0a    cs1                       Ethernet1/7
N3K-C3232C
            e0d    cs2                       Ethernet1/7
N3K-C3232C
cluster01-2/cdp
            e0a    cs1                       Ethernet1/8
N3K-C3232C
            e0d    cs2                       Ethernet1/8
N3K-C3232C
cluster01-3/cdp
            e0a    cs1                       Ethernet1/1/1
N3K-C3232C
            e0b    cs2                       Ethernet1/1/1
N3K-C3232C
cluster1-04/cdp
            e0a    cs1                       Ethernet1/1/2
N3K-C3232C
            e0b    cs2                       Ethernet1/1/2
N3K-C3232C

cluster1::*> system cluster-switch show -is-monitoring-enabled
-operational true
Switch                      Type               Address
Model
--------------------------- ------------------ ----------------
----------
cs1                         cluster-network    10.233.205.90
N3K-C3232C
     Serial Number: FOCXXXXXXGD
      Is Monitored: true
            Reason: None
  Software Version: Cisco Nexus Operating System (NX-OS)
Software, Version
                    9.3(5)
    Version Source: CDP

cs2                         cluster-network    10.233.205.91
```

```
N3K-C3232C
     Serial Number: FOCXXXXXXGS
      Is Monitored: true
            Reason: None
  Software Version: Cisco Nexus Operating System (NX-OS)
Software, Version
                    9.3(5)
    Version Source: CDP

2 entries were displayed.
```

You might observe the following output on the cs1 switch console depending on the RCF version previously loaded on the switch:

```
2020 Nov 17 16:07:18 cs1 %$ VDC-1 %$ %STP-2-UNBLOCK_CONSIST_PORT:
Unblocking port port-channel1 on VLAN0092. Port consistency
restored.
2020 Nov 17 16:07:23 cs1 %$ VDC-1 %$ %STP-2-BLOCK_PVID_PEER:
Blocking port-channel1 on VLAN0001. Inconsistent peer vlan.
2020 Nov 17 16:07:23 cs1 %$ VDC-1 %$ %STP-2-BLOCK_PVID_LOCAL:
Blocking port-channel1 on VLAN0092. Inconsistent local vlan.
```

14. Verify that the cluster is healthy:

    `cluster show`

    Show example

    ```
    cluster1::*> cluster show
    Node                 Health   Eligibility   Epsilon
    -------------------- -------- ------------- -------
    cluster1-01          true     true          false
    cluster1-02          true     true          false
    cluster1-03          true     true          true
    cluster1-04          true     true          false
    4 entries were displayed.
    cluster1::*>
    ```

15. Repeat steps 6 to 14 on switch cs1.
16. Enable auto-revert on the cluster LIFs.

    `network interface modify -vserver Cluster -lif * -auto-revert true`

17. Verify that the cluster LIFs have reverted to their home port:

```
network interface show -role cluster
```

Show example

```
cluster1::*> network interface show -role cluster
            Logical            Status     Network            Current
Current Is
Vserver     Interface          Admin/Oper Address/Mask       Node
Port    Home
----------- ------------------ ---------- ------------------
------------------- ------- ----
Cluster
            cluster1-01_clus1  up/up      169.254.3.4/23
cluster1-01         e0d     true
            cluster1-01_clus2  up/up      169.254.3.5/23
cluster1-01         e0d     true
            cluster1-02_clus1  up/up      169.254.3.8/23
cluster1-02         e0d     true
            cluster1-02_clus2  up/up      169.254.3.9/23
cluster1-02         e0d     true
            cluster1-03_clus1  up/up      169.254.1.3/23
cluster1-03         e0b     true
            cluster1-03_clus2  up/up      169.254.1.1/23
cluster1-03         e0b     true
            cluster1-04_clus1  up/up      169.254.1.6/23
cluster1-04         e0b     true
            cluster1-04_clus2  up/up      169.254.1.7/23
cluster1-04         e0b     true
8 entries were displayed.
cluster1::*>
```

If any cluster LIFs have not returned to their home ports, revert them manually from the local node:

```
network interface revert -vserver Cluster -lif <lif_name>
```

What's next?

After you've installed the NX-OS software, you can install or upgrade the Reference Configuration File (RCF).

Install the Reference Configuration File (RCF)

You install the Reference Configuration File (RCF) after setting up the Nexus 3232C switches for the first time.

Before you begin

Verify the following installations and connections:

- A current backup of the switch configuration.
- A fully functioning cluster (no errors in the logs or similar issues).
- The current RCF.
- A console connection to the switch, this is required when installing the RCF.

About this task

The procedure requires the use of both ONTAP commands and Cisco Nexus 3000 Series Switches commands; ONTAP commands are used unless otherwise indicated.

No operational inter-switch link (ISL) is needed during this procedure. This is by design because RCF version changes can affect ISL connectivity temporarily. To enable non-disruptive cluster operations, the following procedure migrates all of the cluster LIFs to the operational partner switch while performing the steps on the target switch.

Complete the procedure in Prepare to install NX-OS and RCF, and then follow the steps below.

Step 1: Install the RCF on the switches

1. Login to switch cs2 using SSH or by using a serial console.
2. Copy the RCF to the bootflash of switch cs2 using one of the following transfer protocols: FTP, TFTP, SFTP, or SCP. For more information on Cisco commands, see the appropriate guide in the Cisco Nexus 3000 Series NX-OS Command Reference.

   Show example

   This example shows TFTP being used to copy an RCF to the bootflash on switch cs2:

   ```
   cs2# copy tftp: bootflash: vrf management
   Enter source filename: Nexus_3232C_RCF_v1.6-Cluster-HA-Breakout.txt
   Enter hostname for the tftp server: 172.22.201.50
   Trying to connect to tftp server......Connection to Server
   Established.
   TFTP get operation was successful
   Copy complete, now saving to disk (please wait)...
   ```

3. Apply the RCF previously downloaded to the bootflash.

   For more information on Cisco commands, see the appropriate guide in the Cisco Nexus 3000 Series NX-OS Command Reference.

Show example

This example shows the RCF file `Nexus_3232C_RCF_v1.6-Cluster-HA-Breakout.txt` being installed on switch cs2:

```
cs2# copy Nexus_3232C_RCF_v1.6-Cluster-HA-Breakout.txt running-
config echo-commands
```

Make sure to read thoroughly the **Installation notes**, **Important Notes**, and **banner** sections of your RCF. You must read and follow these instructions to verify the proper configuration and operation of the switch.

4. Examine the banner output from the `show banner motd` command. You must read and follow the instructions under **Important Notes** to make sure the proper configuration and operation of the switch.
5. Verify that the RCF is the correct newer version:

   `show running-config`

   When you check the output to verify you have the correct RCF, make sure that the following information is correct:

   - The RCF banner
   - The node and port settings
   - Customizations

     The output varies according to your site configuration. Check the port settings and refer to the release notes for any changes specific to the RCF that you have installed.
6. Reapply any previous customizations to the switch configuration.
7. Save basic configuration details to the `write_erase.cfg` file on the bootflash.

   Make sure to configure the following:
   * Username and password
   * Management IP address
   * Default gateway
   * Switch name

```
cs2# show run | section "switchname" > bootflash:write_erase.cfg

cs2# show run | section "hostname" >> bootflash:write_erase.cfg

cs2# show run | i "username admin password" >> bootflash:write_erase.cfg

cs2# show run | section "vrf context management" >> bootflash:write_erase.cfg

cs2# show run | section "interface mgmt0" >> bootflash:write_erase.cfg
```

8. When installing RCF version 1.12 and later, run the following commands:

```
cs2# echo "hardware access-list tcam region racl-lite 512" >>
bootflash:write_erase.cfg

cs2# echo "hardware access-list tcam region qos 256" >>
bootflash:write_erase.cfg
```

   See the Knowledge Base article How to clear configuration on a Cisco interconnect switch while retaining remote connectivity for further details.

9. Verify that the `write_erase.cfg` file is populated as expected:

```
show file bootflash:write_erase.cfg
```

10. Issue the `write erase` command to erase the current saved configuration:

```
cs2# write erase

Warning: This command will erase the startup-configuration.

Do you wish to proceed anyway? (y/n) [n] y
```

11. Copy the previously saved basic configuration into the startup configuration.

```
cs2# copy bootflash:write_erase.cfg startup-config
```

12. Reboot switch cs2:

```
cs2# reload

This command will reboot the system. (y/n)? [n] y
```

13. Repeat Steps 1 to 12 on switch cs1.
14. Connect the cluster ports of all nodes in the ONTAP cluster to switches cs1 and cs2.

Step: 2: Verify the switch connections

1. Verify that the switch ports connected to the cluster ports are **up**.

```
show interface brief | grep up
```

Show example

```
cs1# show interface brief | grep up
.
.
Eth1/1/1      1       eth  access up      none
10G(D) --
Eth1/1/2      1       eth  access up      none
10G(D) --
Eth1/7        1       eth  trunk  up      none
100G(D) --
Eth1/8        1       eth  trunk  up      none
100G(D) --
.
.
```

2. Verify that the ISL between cs1 and cs2 is functional:

   `show port-channel summary`

Show example

```
cs1# show port-channel summary
Flags:  D - Down         P - Up in port-channel (members)
        I - Individual   H - Hot-standby (LACP only)
        s - Suspended    r - Module-removed
        b - BFD Session Wait
        S - Switched     R - Routed
        U - Up (port-channel)
        p - Up in delay-lacp mode (member)
        M - Not in use. Min-links not met
--------------------------------------------------------------------------
------------
Group Port-       Type     Protocol  Member Ports
      Channel
--------------------------------------------------------------------------
------------
1     Po1(SU)     Eth      LACP      Eth1/31(P)   Eth1/32(P)
cs1#
```

3. Verify that the cluster LIFs have reverted to their home port:

   `network interface show -role cluster`

Show example

```
cluster1::*> network interface show -role cluster
            Logical            Status     Network            Current
Current Is
Vserver     Interface          Admin/Oper Address/Mask       Node
Port    Home
----------- ------------------ ---------- ------------------
------------------- ------- ----
Cluster
            cluster1-01_clus1  up/up      169.254.3.4/23
cluster1-01         e0d     true
            cluster1-01_clus2  up/up      169.254.3.5/23
cluster1-01         e0d     true
            cluster1-02_clus1  up/up      169.254.3.8/23
cluster1-02         e0d     true
            cluster1-02_clus2  up/up      169.254.3.9/23
cluster1-02         e0d     true
            cluster1-03_clus1  up/up      169.254.1.3/23
cluster1-03         e0b     true
            cluster1-03_clus2  up/up      169.254.1.1/23
cluster1-03         e0b     true
            cluster1-04_clus1  up/up      169.254.1.6/23
cluster1-04         e0b     true
            cluster1-04_clus2  up/up      169.254.1.7/23
cluster1-04         e0b     true
8 entries were displayed.
cluster1::*>
```

If any cluster LIFS have not returned to their home ports, revert them manually:
`network interface revert -vserver <vserver_name> -lif <lif_name>`

4. Verify that the cluster is healthy:

   `cluster show`

Show example

```
cluster1::*> cluster show
Node                  Health  Eligibility   Epsilon
--------------------- ------- ------------- -------
cluster1-01           true    true          false
cluster1-02           true    true          false
cluster1-03           true    true          true
cluster1-04           true    true          false
4 entries were displayed.
cluster1::*>
```

Step 3: Set up your ONTAP cluster

NetApp recommends that you use System Manager to set up new clusters.

System Manager provides a simple and easy workflow for cluster set up and configuration including assigning a node management IP address, initializing the cluster, creating a local tier, configuring protocols, and provisioning initial storage.

Refer to Configure ONTAP on a new cluster with System Manager for setup instructions.

What's next?

After you've installed the RCF, you can verify the SSH configuration.

Verify your SSH configuration

If you are using the Ethernet Switch Health Monitor (CSHM) and log collection features, verify that SSH and SSH keys are enabled on the cluster switches.

Steps

1. Verify that SSH is enabled:

```
(switch) show ssh server
ssh version 2 is enabled
```

2. Verify that the SSH keys are enabled:

```
show ssh key
```

Show example

```
(switch)# show ssh key

rsa Keys generated:Fri Jun 28 02:16:00 2024

ssh-rsa
AAAAB3NzaC1yc2EAAAADAQABAAAAgQDiNrD52Q586wTGJjFAbjBlFaA23EpDrZ2sDCew
l7nwlioC6HBejxluIObAH8hrW8kR+gj0ZAfPpNeLGTg3APj/yiPTBoIZZxbWRShywAM5
PqyxWwRb7kp9Zt1YHzVuHYpSO82KUDowKrL6lox/YtpKoZUDZjrZjAp8hTv3JZsPgQ==

bitcount:1024
fingerprint:
SHA256:aHwhpzo7+YCDSrp3isJv2uVGz+mjMMokqdMeXVVXfdo

could not retrieve dsa key information

ecdsa Keys generated:Fri Jun 28 02:30:56 2024

ecdsa-sha2-nistp521
AAAAE2VjZHNhLXNoYTItbmlzdHA1MjEAAAAIbmlzdHA1MjEAAACFBABJ+ZX5SFKhS57e
vkE273e0VoqZi4/32dt+f14fBuKv80MjMsmLfjKtCWy1wgVt1Zi+C5TIBbugpzez529z
kFSF0ADb8JaGCoaAYe2HvWR/f6QLbKbqVIewCdqWgxzrIY5BPP5GBdxQJMBiOwEdnHg1
u/9Pzh/Vz9cHDcCW9qGE780QHA==

bitcount:521
fingerprint:
SHA256:TFGe2hXn6QIpcs/vyHzftHJ7Dceg0vQaULYRAlZeHwQ

(switch)# show feature | include scpServer
scpServer             1          enabled
(switch)# show feature | include ssh
sshServer             1          enabled
(switch)#
```

When enabling FIPS, you must change the bitcount to 256 on the switch using the command `ssh key ecdsa 256 force`. See Configure network security using FIPS for more details.

What's next?

After you've verified your SSH configuration, you can configure switch health monitoring.

Reset the 3232C storage switch to factory defaults

To reset the 3232C storage switch to factory defaults, you must erase the 3232C storage

switch settings.

About this task

- You must be connected to the switch using the serial console.
- This task resets the configuration of the management network.

Steps

1. Erase the existing configuration:

   `write erase`

   ```
   (cs2)# write erase

   Warning: This command will erase the startup-configuration.
   Do you wish to proceed anyway? (y/n) [n] y
   ```

2. Reload the switch software:

   `reload`

   ```
   (cs2)# reload

   This command will reboot the system. (y/n)? [n] y
   ```

   The system reboots and enters the configuration wizard. During the boot, if you receive the prompt “Abort Auto Provisioning and continue with normal setup? (yes/no)[n]”, you should respond **yes** to proceed.

What’s next

After resetting the switch, you can reconfigure it according to your requirements.

Replace a Cisco Nexus 3232C storage switch

Follow these steps to replace a defective Cisco Nexus 3232C storage switch. This is a non-disruptive procedure.

Review requirements

The existing network configuration must have the following characteristics:

- The Cisco Ethernet Switches page has the latest RCF and NX-OS versions on your switches.
- Management connectivity must exist on both switches.

> Make sure that all troubleshooting steps have been completed to confirm that your switch needs replacing.

The replacement Cisco Nexus 3232C switch must have the following characteristics:

- Management network connectivity must be functional.
- Console access to the replacement switch must be in place.
- The appropriate RCF and NX-OS operating system image must be loaded onto the switch.
- Initial customization of the switch must be complete.

Replace the switch

This procedure replaces the second Nexus 3232C storage switch S2 with the new 3232C switch NS2. The two nodes are node1 and node2.

Step 1: Confirm the switch to be replaced is S2

1. If AutoSupport is enabled on this cluster, suppress automatic case creation by invoking an AutoSupport message:
   `system node autosupport invoke -node * -type all - message MAINT=xh`

   x is the duration of the maintenance window in hours.

   > The AutoSupport message notifies technical support of this maintenance task so that automatic case creation is suppressed during the maintenance window.

2. Check on the health status of the storage node ports to make sure that there is connection to storage switch S1:

   `storage port show -port-type ENET`

   Show example

   ```
   storage::*> storage port show -port-type ENET
                                        Speed                      VLAN
   Node                Port Type  Mode    (Gb/s) State    Status      ID
   ------------------- ---- ----- ------- ------ -------- --------- ----
   node1
                       e3a  ENET  storage    100 enabled  online      30
                       e3b  ENET  storage      0 enabled  offline     30
                       e7a  ENET  storage      0 enabled  offline     30
                       e7b  ENET  storage      0 enabled  offline     30
   node2
                       e3a  ENET  storage    100 enabled  online      30
                       e3b  ENET  storage      0 enabled  offline     30
                       e7a  ENET  storage      0 enabled  offline     30
                       e7b  ENET  storage      0 enabled  offline     30
   ```

3. Verify that storage switch S1 is available:

   `network device-discovery show`

Show example

```
storage::*> network device-discovery show
Node/       Local  Discovered
Protocol    Port   Device (LLDP: ChassisID)  Interface
Platform
----------- ------ ------------------------- -----------------
----------------
node1/cdp
            e3a    S1                        Ethernet1/1
NX3232C
            e4a    node2                     e4a               AFF-
A700
            e4e    node2                     e4e               AFF-
A700
node1/lldp
            e3a    S1                        Ethernet1/1       -
            e4a    node2                     e4a               -
            e4e    node2                     e4e               -
node2/cdp
            e3a    S1                        Ethernet1/2
NX3232C
            e4a    node1                     e4a               AFF-
A700
            e4e    node1                     e4e               AFF-
A700
node2/lldp
            e3a    S1                        Ethernet1/2       -
            e4a    node1                     e4a               -
            e4e    node1                     e4e               -
```

4. Run the `show lldp neighbors` command on the working switch to confirm that you can see both nodes and all shelves:

   `show lldp neighbors`

Show example

```
S1# show lldp neighbors
Capability codes:
  (R) Router, (B) Bridge, (T) Telephone, (C) DOCSIS Cable Device
  (W) WLAN Access Point, (P) Repeater, (S) Station, (O) Other
Device ID               Local Intf      Hold-time  Capability  Port
ID
node1                   Eth1/1          121        S           e3a
node2                   Eth1/2          121        S           e3a
SHFGD2008000011         Eth1/5          121        S           e0a
SHFGD2008000011         Eth1/6          120        S           e0a
SHFGD2008000022         Eth1/7          120        S           e0a
SHFGD2008000022         Eth1/8          120        S           e0a
```

Step 2: Configure cabling

1. Verify the shelf ports in the storage system:

   `storage shelf port show -fields remote-device,remote-port`

   Show example

```
storage::*> storage shelf port show -fields remote-device,remote-
port

shelf  id  remote-port  remote-device
-----  --  -----------  -------------
3.20   0   Ethernet1/5  S1
3.20   1   -            -
3.20   2   Ethernet1/6  S1
3.20   3   -            -
3.30   0   Ethernet1/7  S1
3.20   1   -            -
3.30   2   Ethernet1/8  S1
3.20   3   -            -
```

2. Remove all cables attached to storage switch S2.
3. Reconnect all cables to the replacement switch NS2.

Step 3: Verify all device configurations on switch NS2

1. Verify the health status of the storage node ports:

```
storage port show -port-type ENET
```

Show example

```
storage::*> storage port show -port-type ENET
                                     Speed
VLAN
Node                Port Type  Mode    (Gb/s) State    Status
ID
------------------ ---- ----- ------- ------ -------- ------------
---
node1
                    e3a  ENET  storage    100 enabled  online
30
                    e3b  ENET  storage      0 enabled  offline
30
                    e7a  ENET  storage      0 enabled  offline
30
                    e7b  ENET  storage    100 enabled  online
30
node2
                    e3a  ENET  storage    100 enabled  online
30
                    e3b  ENET  storage      0 enabled  offline
30
                    e7a  ENET  storage      0 enabled  offline
30
                    e7b  ENET  storage    100 enabled  online
30
```

2. Verify that both switches are available:

```
network device-discovery show
```

Show example

```
storage::*> network device-discovery show
Node/       Local  Discovered
Protocol    Port   Device (LLDP: ChassisID)  Interface
Platform
----------- ------ ------------------------- ----------------
--------
node1/cdp
            e3a    S1                        Ethernet1/1
NX3232C
            e4a    node2                     e4a               AFF-
A700
            e4e    node2                     e4e               AFF-
A700
            e7b    NS2                       Ethernet1/1
NX3232C
node1/lldp
            e3a    S1                        Ethernet1/1       -
            e4a    node2                     e4a               -
            e4e    node2                     e4e               -
            e7b    NS2                       Ethernet1/1       -
node2/cdp
            e3a    S1                        Ethernet1/2
NX3232C
            e4a    node1                     e4a               AFF-
A700
            e4e    node1                     e4e               AFF-
A700
            e7b    NS2                       Ethernet1/2
NX3232C
node2/lldp
            e3a    S1                        Ethernet1/2       -
            e4a    node1                     e4a               -
            e4e    node1                     e4e               -
            e7b    NS2                       Ethernet1/2       -
```

3. Verify the shelf ports in the storage system:

   `storage shelf port show -fields remote-device,remote-port`

Show example

```
storage::*> storage shelf port show -fields remote-device,remote-
port
shelf id remote-port remote-device
----- -- ----------- -------------
3.20  0  Ethernet1/5 S1
3.20  1  Ethernet1/5 NS2
3.20  2  Ethernet1/6 S1
3.20  3  Ethernet1/6 NS2
3.30  0  Ethernet1/7 S1
3.20  1  Ethernet1/7 NS2
3.30  2  Ethernet1/8 S1
3.20  3  Ethernet1/8 NS2
```

4. If you suppressed automatic case creation, re-enable it by invoking an AutoSupport message:

```
system node autosupport invoke -node * -type all -message MAINT=END
```

What's next?

After you've replaced your switch, you can configure switch health monitoring.

Upgrade a Cisco Nexus 3232C storage switch

Follow these steps to upgrade the Cisco NX-OS software and reference configuration files (RCF) on Cisco Nexus 3232C switches.

Review requirements

Before you begin

Ensure that the following conditions exist before you upgrade the NX-OS software and RCFs on the storage switch:

- The switch is fully functioning (there should be no errors in the logs or similar issues).
- You have checked or set your desired boot variables in the RCF to reflect the desired boot images if you are installing only NX-OS and keeping your current RCF version.

  If you need to change the boot variables to reflect the current boot images, you must do so before reapplying the RCF so that the correct version is instantiated on future reboots.

- You have referred to the appropriate software and upgrade guides available on the Cisco Nexus 3000 Series Switches page for complete documentation on the Cisco storage upgrade and downgrade procedures.
- The number of 10 GbE and 40/100 GbE ports are defined in the reference configuration files (RCFs) available on the Cisco® Ethernet Switches page.

Replace the switch

About the examples

The examples in this procedure use the following switch and node nomenclature:

- The names of the two storage switches are S1 and S2.
- The nodes are node1 and node2.

The examples in this procedure use two nodes; node1 with two storage ports and node2 with two storage ports. See the Hardware Universe to verify the correct storage ports on your platforms. See What additional information do I need to install my equipment that is not in HWU? for more information about switch installation requirements.

> The procedure requires the use of both ONTAP commands and Cisco Nexus 3000 Series Switches commands; ONTAP commands are used unless otherwise indicated. The command outputs might vary depending on different releases of ONTAP.

Step 1: Check the health status of switches and ports

1. If AutoSupport is enabled, suppress automatic case creation by invoking an AutoSupport message:
   `system node autosupport invoke -node * -type all - message MAINT=xh`

   x is the duration of the maintenance window in hours.

   > The AutoSupport message notifies technical support of this maintenance task so that automatic case creation is suppressed during the maintenance window.

2. Check that the storage switches are available:

   ```
   system switch ethernet show
   ```

Show example

```
storage::*> system switch ethernet show
Switch                      Type               Address
Model
--------------------------- ------------------ ----------------
---------------
S1
                            storage-network    172.17.227.5
NX3232C
     Serial Number: FOC221206C2
      Is Monitored: true
            Reason: None
  Software Version: Cisco Nexus Operating System (NX-OS) Software,
Version
                    9.3(3)
    Version Source: CDP

S2
                            storage-network    172.17.227.6
NX3232C
     Serial Number: FOC220443LZ
      Is Monitored: true
            Reason: None
  Software Version: Cisco Nexus Operating System (NX-OS) Software,
Version
                    9.3(3)
    Version Source: CDP

2 entries were displayed.
storage::*>
```

3. Verify that the node ports are healthy and operational:

```
storage port show -port-type ENET
```

Show example

```
storage::*> storage port show -port-type ENET
                                      Speed
VLAN
Node                Port Type  Mode    (Gb/s) State    Status
ID
------------------- ---- ----- ------- ------ -------- -----------
----
node1
                    e3a  ENET  storage    100 enabled  online
30
                    e3b  ENET  storage      0 enabled  offline
30
                    e7a  ENET  storage      0 enabled  offline
30
                    e7b  ENET  storage    100 enabled  online
30
node2
                    e3a  ENET  storage    100 enabled  online
30
                    e3b  ENET  storage      0 enabled  offline
30
                    e7a  ENET  storage      0 enabled  offline
30
                    e7b  ENET  storage    100 enabled  online
30
```

4. Check that there are no storage switch or cabling issues:

   `system health alert show -instance`

   Show example

```
storage::*> system health alert show -instance
There are no entries matching your query.
```

Step 2: Copy the RCF to Cisco switch S2

1. Copy the RCF on switch S2 to the switch bootflash using one of the following transfer protocols: FTP, HTTP, TFTP, SFTP, or SCP.

   For more information on Cisco commands, see the appropriate guide in the Cisco Nexus 3000 Series NX-OS Command References.

Show example

The following example shows HTTP being used to copy an RCF to the bootflash on switch S2:

```
S2# copy http://172.16.10.1//cfg/Nexus_3232C_RCF_v1.6-Storage.txt
bootflash: vrf management
% Total    % Received % Xferd  Average  Speed   Time    Time
Time                           Current
                                Dload    Upload  Total   Spent
Left                           Speed
  100        3254       100    3254     0       0       8175     0
--:--:-- --:--:-- --:--:-   8301
Copy complete, now saving to disk (please wait)...
Copy complete.
S2#
```

2. Apply the RCF previously downloaded to the bootflash:

   `copy bootflash:`

   Show example

   The following example shows the RCF file `Nexus_3232C_RCF_v1.6-Storage.txt` being installed on switch S2:

   ```
   S2# copy Nexus_3232C_RCF_v1.6-Storage.txt running-config echo-
   commands
   ```

3. Verify that the RCF file is the correct newer version:

   `show running-config`

   When you check the output to verify you have the correct RCF, make sure that the following information is correct:

   - The RCF banner
   - The node and port settings
   - Customizations

     The output varies according to your site configuration. Check the port settings and refer to the release notes for any changes specific to the RCF that you have installed.

     > In the banner output from the `show banner motd` command, you must read and follow the instructions in the **IMPORTANT NOTES** section to make sure the proper configuration and operation of the switch.

Show example

```
S2# show banner motd

*****************************************************************
*************
* NetApp Reference Configuration File (RCF)
*
* Switch   : Cisco Nexus 3232C
* Filename : Nexus_3232C_RCF_v1.6-Storage.txt
* Date     : Oct-20-2020
* Version  : v1.6
*
* Port Usage : Storage configuration
* Ports  1-32: Controller and Shelf Storage Ports
* Ports 33-34: Disabled
*
* IMPORTANT NOTES*
* - This RCF utilizes QoS and requires TCAM re-configuration,
requiring RCF
*   to be loaded twice with the Storage Switch rebooted in
between.
*
* - Perform the following 4 steps to ensure proper RCF
installation:
*
*   (1) Apply RCF first time, expect following messages:
*       - Please save config and reload the system...
*       - Edge port type (portfast) should only be enabled on
ports...
*       - TCAM region is not configured for feature QoS class
IPv4 ingress...
*
*   (2) Save running-configuration and reboot Cluster Switch
*
*   (3) After reboot, apply same RCF second time and expect
following messages:
*       - % Invalid command at '^' marker
*       - Syntax error while parsing...
*
*   (4) Save running-configuration again
*****************************************************************
*************
S2#
```

When applying the RCF for the first time, the **ERROR: Failed to write VSH commands** message is expected and can be ignored.

4. After you verify that the software versions and switch settings are correct, copy the `running-config` file to the `startup-config` file on switch S2.

   For more information on Cisco commands, see the appropriate guide in the Cisco Nexus 3000 Series NX-OS Command References.

   Show example

   The following example shows the `running-config` file successfully copied to the `startup-config` file:

   ```
   S2# copy running-config startup-config
   [########################################] 100% Copy complete.
   ```

Step 3: Copy the NX-OS image to Cisco switch S2 and reboot

1. Copy the NX-OS image to switch S2.

Show example

```
S2# copy sftp: bootflash: vrf management
Enter source filename: /code/nxos.9.3.4.bin
Enter hostname for the sftp server: 172.19.2.1
Enter username: user1

Outbound-ReKey for 172.19.2.1:22
Inbound-ReKey for 172.19.2.1:22
user1@172.19.2.1's password:
sftp> progress
Progress meter enabled
sftp> get   /code/nxos.9.3.4.bin  /bootflash/nxos.9.3.4.bin
/code/nxos.9.3.4.bin  100% 1261MB   9.3MB/s   02:15
sftp> exit
Copy complete, now saving to disk (please wait)...
Copy complete.

cs2# copy sftp: bootflash: vrf management
Enter source filename: /code/n9000-epld.9.3.4.img
Enter hostname for the sftp server: 172.19.2.1
Enter username: user1

Outbound-ReKey for 172.19.2.1:22
Inbound-ReKey for 172.19.2.1:22
user1@172.19.2.1's password:
sftp> progress
Progress meter enabled
sftp> get   /code/n9000-epld.9.3.4.img  /bootflash/n9000-
epld.9.3.4.img
/code/n9000-epld.9.3.4.img  100%  161MB   9.5MB/s   00:16
sftp> exit
Copy complete, now saving to disk (please wait)...
Copy complete.
```

2. Install the system image so that the new version will be loaded the next time switch S2 is rebooted.

   The switch will be reboot in 10 seconds with the new image as shown in the following output:

Show example

```
S2# install all nxos bootflash:nxos.9.3.4.bin
Installer will perform compatibility check first. Please wait.
Installer is forced disruptive

Verifying image bootflash:/nxos.9.3.4.bin for boot variable "nxos".
[] 100% -- SUCCESS

Verifying image type.
[] 100% -- SUCCESS

Preparing "nxos" version info using image bootflash:/nxos.9.3.4.bin.
[] 100% -- SUCCESS

Preparing "bios" version info using image bootflash:/nxos.9.3.4.bin.
[] 100% -- SUCCESS

Performing module support checks.
[] 100% -- SUCCESS

Notifying services about system upgrade.
[] 100% -- SUCCESS


Compatibility check is done:
Module  bootable          Impact  Install-type  Reason
------  --------  --------------  ------------  ------
     1       yes      disruptive         reset  default upgrade is
not hitless


Images will be upgraded according to following table:
Module       Image                  Running-Version(pri:alt)
New-Version  Upg-Required
------  ----------  ----------------------------------------
--------------------  ------------
     1        nxos                                      9.3(3)
9.3(4)           yes
     1        bios     v08.37(01/28/2020):v08.23(09/23/2015)
v08.38(05/29/2020)            no


Switch will be reloaded for disruptive upgrade.
Do you want to continue with the installation (y/n)?  [n] y
input string too long
```

```
Do you want to continue with the installation (y/n)?  [n] y

Install is in progress, please wait.

Performing runtime checks.
[] 100% -- SUCCESS

Setting boot variables.
[] 100% -- SUCCESS

Performing configuration copy.
[] 100% -- SUCCESS

Module 1: Refreshing compact flash and upgrading
bios/loader/bootrom.
Warning: please do not remove or power off the module at this time.
[] 100% -- SUCCESS


Finishing the upgrade, switch will reboot in 10 seconds.
S2#
```

3. Save the configuration.

   For more information on Cisco commands, see the appropriate guide in the Cisco Nexus 3000 Series NX-OS Command References.

   You are prompted to reboot the system.

   Show example

```
S2# copy running-config startup-config
[] 100% Copy complete.
S2# reload
This command will reboot the system. (y/n)?  [n] y
```

4. Confirm that the new NX-OS version number is on the switch:

Show example

```
S2# show version
Cisco Nexus Operating System (NX-OS) Software
TAC support: http://www.cisco.com/tac
Copyright (C) 2002-2020, Cisco and/or its affiliates.
All rights reserved.
The copyrights to certain works contained in this software are
owned by other third parties and used and distributed under their
own
licenses, such as open source.  This software is provided "as is,"
and unless
otherwise stated, there is no warranty, express or implied,
including but not
limited to warranties of merchantability and fitness for a
particular purpose.
Certain components of this software are licensed under
the GNU General Public License (GPL) version 2.0 or
GNU General Public License (GPL) version 3.0  or the GNU
Lesser General Public License (LGPL) Version 2.1 or
Lesser General Public License (LGPL) Version 2.0.
A copy of each such license is available at
http://www.opensource.org/licenses/gpl-2.0.php and
http://opensource.org/licenses/gpl-3.0.html and
http://www.opensource.org/licenses/lgpl-2.1.php and
http://www.gnu.org/licenses/old-licenses/library.txt.

Software
  BIOS: version 08.38
 NXOS: version 9.3(4)
  BIOS compile time:  05/29/2020
  NXOS image file is: bootflash:///nxos.9.3.4.bin
  NXOS compile time:  4/28/2020 21:00:00 [04/29/2020 02:28:31]


Hardware
  cisco Nexus3000 C3232C Chassis (Nexus 9000 Series)
  Intel(R) Xeon(R) CPU E5-2403 v2 @ 1.80GHz with 8154432 kB of
memory.
  Processor Board ID FOC20291J6K

  Device name: S2
  bootflash:   53298520 kB
Kernel uptime is 0 day(s), 0 hour(s), 3 minute(s), 42 second(s)

Last reset at 157524 usecs after Mon Nov  2 18:32:06 2020
```

```
  Reason: Reset due to upgrade
  System version: 9.3(3)
  Service:

plugin
  Core Plugin, Ethernet Plugin

Active Package(s):

S2#
```

Step 4: Recheck the health status of switches and ports

1. Recheck that the storage switches are available after the reboot:

   ```
   system switch ethernet show
   ```

Show example

```
storage::*> system switch ethernet show
Switch                      Type               Address
Model
--------------------------- ------------------ ----------------
---------------
S1
                            storage-network    172.17.227.5
NX3232C
     Serial Number: FOC221206C2
      Is Monitored: true
            Reason: None
  Software Version: Cisco Nexus Operating System (NX-OS) Software,
Version
                    9.3(4)
    Version Source: CDP

S2
                            storage-network    172.17.227.6
NX3232C
     Serial Number: FOC220443LZ
      Is Monitored: true
            Reason: None
  Software Version: Cisco Nexus Operating System (NX-OS) Software,
Version
                    9.3(4)
    Version Source: CDP

2 entries were displayed.
storage::*>
```

2. Verify that the switch ports are healthy and operational after the reboot:

   ```
   storage port show -port-type ENET
   ```

Show example

```
storage::*> storage port show -port-type ENET
                                      Speed
VLAN
Node                Port Type  Mode    (Gb/s) State    Status
ID
------------------ ---- ----- ------- ------ -------- -----------
----
node1
                    e3a  ENET  storage    100 enabled  online
30
                    e3b  ENET  storage      0 enabled  offline
30
                    e7a  ENET  storage      0 enabled  offline
30
                    e7b  ENET  storage    100 enabled  online
30
node2
                    e3a  ENET  storage    100 enabled  online
30
                    e3b  ENET  storage      0 enabled  offline
30
                    e7a  ENET  storage      0 enabled  offline
30
                    e7b  ENET  storage    100 enabled  online
30
```

3. Recheck that there are no storage switch or cabling issues with the cluster:

   `system health alert show -instance`

   Show example

   ```
   storage::*> system health alert show -instance
   There are no entries matching your query.
   ```

4. Repeat the procedure to upgrade the NX-OS software and RCF on switch S1.
5. If you suppressed automatic case creation, re-enable it by invoking an AutoSupport message:

   `system node autosupport invoke -node * -type all -message MAINT=END`

What's next?

After you've upgraded your switch, you can configure switch health monitoring.

NVIDIA SN2100

Get started

Installation and setup workflow for NVIDIA SN2100 switches

The NVIDIA SN2100 is an Ethernet switch that allows you to switch data between controllers and disk shelves.

Follow these workflow steps to install and setup your to SN2100 switches.

1. **Review the configuration requirements**

Review the configuration requirements for the SN2100 storage switch.

2. **Review the components and part numbers**

Review the components and part numbers for the SN2100 storage switch.

3. **Review the required documentation**

Review specific switch and controller documentation to set up your SN2100 switches and the ONTAP cluster.

4. **Install the hardware**

Install the switch hardware.

5. **Configure the software**

Configure the switch software.

Configuration requirements for NVIDIA SN2100 switches

For NVIDIA SN2100 switch installation and maintenance, be sure to review all requirements.

Installation requirements

If you want to build ONTAP clusters with more than two nodes, you need two supported cluster network switches. You can use additional management switches, which are optional.

You install the NVIDIA SN2100 switch (X190006/X190106) in the NVIDIA dual/single switch cabinet with the standard brackets that are included with the switch.

For cabling guidelines, see Cabling and configuration considerations.

ONTAP and Linux support

The NVIDIA SN2100 switch is a 10/25/40/100 Gb Ethernet switch running Cumulus Linux. The switch supports the following:

- ONTAP 9.10.1P3. The SN2100 switch serves Cluster and Storage applications in ONTAP 9.10.1P3 over different switch-pairs. From ONTAP 9.10.1P3, you can use NVIDIA SN2100 switches to combine storage and cluster functionality into a shared switch configuration.
- Cumulus Linux (CL) OS version 4.4.3. For current compatibility information, see the NVIDIA Ethernet Switches information page.
- You can install Cumulus Linux when the switch is running Cumulus Linux or ONIE.

What's next

After you've reviewed the configuration requirements, you can confirm your components and part numbers.

Components and part numbers for NVIDIA SN2100 switches

For NVIDIA SN2100 switch installation and maintenance, be sure to review the list of components and part numbers for the cabinet and rail kit.

Cabinet details

You install the NVIDIA SN2100 switch (X190006/X190106) in the NVIDIA dual/single switch cabinet with the standard brackets that are included with the switch.

Rail kit details

The following table lists the part number and description for the MSN2100 switches and rail kits:

Part number	Description
X190006-PE	Cluster Switch, NVIDIA SN2100, 16PT 100G, PTSX
X190006-PI	Cluster Switch, NVIDIA SN2100, 16PT 100G, PSIN
X190106-FE-PE	Switch, NVIDIA SN2100, 16PT 100G, PTSX, Front End
X190106-FE-PI	Switch, NVIDIA SN2100, 16PT 100G, PSIN, Front End
X-MTEF-KIT-D	Rail Kit, NVIDIA Dual switch side by side
X-MTEF-KIT-E	Rail Kit, NVIDIA Single switch short depth

See NVIDIA documentation for details on installing your SN2100 switch and rail kit.

What's next

After you've confirmed your components and part numbers, you can review the required documentation.

Documentation requirements for NVIDIA SN2100 switches

For NVIDIA SN2100 switch installation and maintenance, be sure to review all the recommended documentation.

The following table lists the documentation available for the NVIDIA SN2100 switches.

Title	Description
Setup and configure your NVIDIA SN2100 switches	Describes how to setup and configure your NVIDIA SN2100 switches, including installing Cumulus Linux and applicable RCFs.
Migrate from a Cisco storage switch to a NVIDIA SN2100 storage switch	Describes how to migrate from environments that use Cisco storage switches to environments that use NVIDIA SN2100 storage switches.
Migrate to a two-node switched cluster with NVIDIA SN2100 cluster switches	Describes how to migrate to a two-node switched environment using NVIDIA SN2100 cluster switches.
Replace a NVIDIA SN2100 storage switch	Describes the procedure to replace a defective NVIDIA SN2100 storage switch and download Cumulus Linux and reference configuration file.

Install hardware

Hardware install workflow for NVIDIA SN2100 storage switches

To install and configure the hardware for a SN2100 storage switch, follow these steps:

1. **Install the hardware**

Install the switch hardware.

2. **Review cabling and configuration considerations**

Review requirements for optical connections, the QSA adapter, and the switchport speed.

3. **Cable the NS224 shelves**

Follow the cabling procedures if you have a system in which the NS224 drive shelves need to be cabled as switch-attached storage (not direct-attached storage).

Install the hardware for the NVIDIA SN2100 switch

To install the SN2100 hardware, refer to NVIDIA's documentation.

Steps

1. Review the configuration requirements.

2. Follow the instructions in NVIDIA Switch Installation Guide.

What's next?

After you've installed your hardware, you can review cabling and configuration requirements.

Review cabling and configuration considerations

Before configuring your NVIDIA SN2100 switch, review the following considerations.

NVIDIA port details

Switch ports	Ports usage
swp1s0-3	4x10GbE breakout cluster port nodes
swp2s0-3	4x25GbE breakout cluster port nodes
swp3-14	40/100GbE cluster port nodes
swp15-16	100GbE Inter-Switch Link (ISL) ports

See the Hardware Universe for more information on switch ports.

Link-up delays with optical connections

If you are experiencing link-up delays of more than five seconds, Cumulus Linux 5.4 and later includes support for fast link-up. You can configure the links by using the `nv set` command as follows:

```
nv set interface <interface-id> link fast-linkup on
nv config apply
reload the switchd
```

Show example

```
cumulus@cumulus-cs13:mgmt:~$ nv set interface swp5 link fast-linkup on
cumulus@cumulus-cs13:mgmt:~$ nv config apply
switchd need to reload on this config change

Are you sure? [y/N] y
applied [rev_id: 22]

Only switchd reload required
```

Support for copper connections

The following configuration changes are required to fix this issue.

Cumulus Linux 4.4.3

1. Identify the name for each interface using 40GbE/100GbE copper cables:

```
cumulus@cumulus:mgmt:~$ net show interface pluggables

Interface  Identifier     Vendor Name     Vendor PN    Vendor SN
Vendor Rev
---------  -------------  --------------  -----------  -------------
----------
swp3       0x11 (QSFP28)  Molex           112-00576    93A2229911111
B0
swp4       0x11 (QSFP28)  Molex           112-00576    93A2229922222
B0
```

2. Add the following two lines to the `/etc/cumulus/switchd.conf` file for every port (swp<n>) that is using 40GbE/100GbE copper cables:
   - `interface.swp<n>.enable_media_depended_linkup_flow=TRUE`
   - `interface.swp<n>.enable_short_tuning=TRUE`

   For example:

```
cumulus@cumulus:mgmt:~$ sudo nano /etc/cumulus/switchd.conf
.
.
interface.swp3.enable_media_depended_linkup_flow=TRUE
interface.swp3.enable_short_tuning=TRUE
interface.swp4.enable_media_depended_linkup_flow=TRUE
interface.swp4.enable_short_tuning=TRUE
```

3. Restart the `switchd` service:

```
cumulus@cumulus:mgmt:~$ sudo systemctl restart switchd.service
```

4. Confirm that the ports are up:

```
cumulus@cumulus:mgmt:~$ net show interface all

State  Name      Spd   MTU    Mode       LLDP               Summary
-----  --------- ----  -----  ---------- ------------------ --------
UP     swp3      100G  9216   Trunk/L2                      Master:
bridge(UP)
UP     swp4      100G  9216   Trunk/L2                      Master:
bridge(UP)
```

Cumulus Linux 5.x

1. Identify the name for each interface using 40GbE/100GbE copper cables:

```
cumulus@cumulus:mgmt:~$ nv show interface pluggables

Interface  Identifier     Vendor Name     Vendor PN    Vendor SN
Vendor Rev
---------  -------------  --------------  -----------  -------------
----------
swp3       0x11 (QSFP28)  Molex           112-00576    93A2229911111
B0
swp4       0x11 (QSFP28)  Molex           112-00576    93A2229922222
B0
```

2. Configure the links using the `nv set` command as follows:
   - `nv set interface <interface-id> link fast-linkup on`
   - `nv config apply`
   - Reload the `switchd` service

   For example:

```
cumulus@cumulus:mgmt:~$ nv set interface swp5 link fast-linkup on
cumulus@cumulus:mgmt:~$ nv config apply
switchd need to reload on this config change

Are you sure? [y/N] y
applied [rev_id: 22]

Only switchd reload required
```

3. Confirm that the ports are up:

```
cumulus@cumulus:mgmt:~$ net show interface all

State  Name       Spd   MTU    Mode        LLDP                 Summary
-----  ---------- ----  -----  ----------  -------------------  --------
UP     swp3       100G  9216   Trunk/L2                         Master:
bridge(UP)
UP     swp4       100G  9216   Trunk/L2                         Master:
bridge(UP)
```

See the Knowledge Base article SN2100 switch fails to connect using 40/100GbE copper cables for further details.

On Cumulus Linux 4.4.2, copper connections are not supported on SN2100 switches with X1151A NIC, X1146A NIC, or onboard 100GbE ports.
For example:

- AFF A800 on ports e0a and e0b
- AFF A320 on ports e0g and e0h

QSA adapter

When a QSA adapter is used to connect to the 10GbE/25GbE cluster ports on a platform, the link might not come up.

To resolve this issue, do the following:

- For 10GbE, manually set the swp1s0-3 link speed to 10000 and set auto-negotiation to off.
- For 25GbE, manually set the swp2s0-3 link speed to 25000 and set auto-negotiation to off.

When using 10GbE/25GbE QSA adapters, insert them in non-breakout 40GbE/100GbE ports (swp3-swp14). Do not insert the QSA adapter in a port that is configured for breakout.

Set interface speed on breakout ports

Depending on the transceiver in the switch port, you might need to set the speed on the switch interface to a fixed speed. If using 10GbE and 25GbE breakout ports, verify that auto-negotiation is off and set the interface speed on the switch.

Cumulus Linux 4.4.3

For example:

```
cumulus@cumulus:mgmt:~$ net add int swp1s3 link autoneg off && net com
--- /etc/network/interfaces     2019-11-17 00:17:13.470687027 +0000
+++ /run/nclu/ifupdown2/interfaces.tmp  2019-11-24 00:09:19.435226258
+0000
@@ -37,21 +37,21 @@
     alias 10G Intra-Cluster Node
     link-autoneg off
     link-speed 10000  <---- port speed set
     mstpctl-bpduguard yes
     mstpctl-portadminedge yes
     mtu 9216

auto swp1s3
iface swp1s3
     alias 10G Intra-Cluster Node
-    link-autoneg off
+    link-autoneg on
     link-speed 10000 <---- port speed set
     mstpctl-bpduguard yes
     mstpctl-portadminedge yes
     mtu 9216

auto swp2s0
iface swp2s0
     alias 25G Intra-Cluster Node
     link-autoneg off
     link-speed 25000 <---- port speed set
```

Check the interface and port status to verify that the settings are applied:

```
cumulus@cumulus:mgmt:~$ net show interface

State  Name       Spd    MTU    Mode         LLDP              Summary
-----  --------   -----  -----  ----------   ---------------
-------------------------------------
.
.
UP     swp1s0     10G    9216   Trunk/L2     cs07 (e4c)        Master:
br_default(UP)
UP     swp1s1     10G    9216   Trunk/L2     cs07 (e4d)        Master:
br_default(UP)
UP     swp1s2     10G    9216   Trunk/L2     cs08 (e4c)        Master:
br_default(UP)
UP     swp1s3     10G    9216   Trunk/L2     cs08 (e4d)        Master:
br_default(UP)
.
.
UP     swp3       40G    9216   Trunk/L2     cs03 (e4e)        Master:
br_default(UP)
UP     swp4       40G    9216   Trunk/L2     cs04 (e4e)        Master:
br_default(UP)
DN     swp5       N/A    9216   Trunk/L2                       Master:
br_default(UP)
DN     swp6       N/A    9216   Trunk/L2                       Master:
br_default(UP)
DN     swp7       N/A    9216   Trunk/L2                       Master:
br_default(UP)
.
.
UP     swp15      100G   9216   BondMember   cs01 (swp15)      Master:
cluster_isl(UP)
UP     swp16      100G   9216   BondMember   cs01 (swp16)      Master:
cluster_isl(UP)
.
.
```

Cumulus Linux 5.x

For example:

```
cumulus@cumulus:mgmt:~$ nv set interface swp1s3 link auto-negotiate off
cumulus@cumulus:mgmt:~$ nv set interface swp1s3 link speed 10G
cumulus@cumulus:mgmt:~$ nv show interface swp1s3

link

  auto-negotiate        off                     off
off
  duplex                full                    full
full
  speed                 10G                     10G
10G
  fec                   auto                    auto
auto
  mtu                   9216                    9216
9216
[breakout]

  state                 up                      up
up
```

Check the interface and port status to verify that the settings are applied:

```
cumulus@cumulus:mgmt:~$ nv show interface

State  Name       Spd    MTU    Mode         LLDP              Summary
-----  --------   -----  -----  ----------   ---------------
------------------------------------
.
.
UP     swp1s0     10G    9216   Trunk/L2     cs07 (e4c)        Master:
br_default(UP)
UP     swp1s1     10G    9216   Trunk/L2     cs07 (e4d)        Master:
br_default(UP)
UP     swp1s2     10G    9216   Trunk/L2     cs08 (e4c)        Master:
br_default(UP)
UP     swp1s3     10G    9216   Trunk/L2     cs08 (e4d)        Master:
br_default(UP)
.
.
UP     swp3       40G    9216   Trunk/L2     cs03 (e4e)        Master:
br_default(UP)
UP     swp4       40G    9216   Trunk/L2     cs04 (e4e)        Master:
br_default(UP)
DN     swp5       N/A    9216   Trunk/L2                       Master:
br_default(UP)
DN     swp6       N/A    9216   Trunk/L2                       Master:
br_default(UP)
DN     swp7       N/A    9216   Trunk/L2                       Master:
br_default(UP)
.
.
UP     swp15      100G   9216   BondMember   cs01 (swp15)      Master:
cluster_isl(UP)
UP     swp16      100G   9216   BondMember   cs01 (swp16)      Master:
cluster_isl(UP)
.
.
```

What's next?

After you've reviewed your cabling and configuration requirements, you can cable the NS224 shelves as switch-attached storage.

Cable NS224 shelves as switch-attached storage

If you have a system in which the NS224 drive shelves need to be cabled as switch-attached storage (not direct-attached storage), use the information provided here.

- Cable NS224 drive shelves through storage switches:

  Information for cabling switch-attached NS224 drive shelves

- Install your storage switches:

  AFF and FAS Switch Documentation

- Confirm supported hardware, such as storage switches and cables, for your platform model:

  NetApp Hardware Universe

Configure software

Software install workflow for NVIDIA SN2100 storage switches

To install and configure the software for a NVIDIA SN2100 switch, follow these steps:

Configure the switch

Configure the NVIDIA SN2100 switch.

Install Cumulus Linux in Cumulus mode

You can install the Cumulus Linux (CL) OS when the switch is running Cumulus Linux.

Install Cumulus Linux in ONIE mode

Alternatively, you can install the Cumulus Linux (CL) OS when the switch is running Cumulus Linux in ONIE mode.

Install the Reference Configuration File (RCF) script

There are two RCF scripts available for Clustering and Storage applications. The procedure for each is the same.

Install the CSHM file

You can install the applicable configuration file for Ethernet switch health monitoring of NVIDIA cluster switches.

Reset the switch to factory defaults

Erase the SN2100 storage switch settings.

Configure the NVIDIA SN2100 switch

To configure the SN2100 switch, refer to NVIDIA's documentation.

Steps

1. Review the configuration requirements.
2. Follow the instructions in NVIDIA System Bring-Up..

What's next?

After you've configured your switches, you can install Cumulus Linux in Cumulus mode or install Cumulus Linux in ONIE mode.

Install Cumulus Linux in Cumulus mode

Follow this procedure to install Cumulus Linux (CL) OS when the switch is running in Cumulus mode.

> Cumulus Linux (CL) OS can be installed either when the switch is running Cumulus Linux or ONIE (see Install in ONIE mode).

Before you begin

Make sure that the following are available:

- Intermediate-level Linux knowledge.
- Familiarity with basic text editing, UNIX file permissions, and process monitoring. A variety of text editors are pre-installed, including `vi` and `nano`.
- Access to a Linux or UNIX shell. If you are running Windows, use a Linux environment as your command line tool for interacting with Cumulus Linux.
- The baud rate requirement must be set to 115200 on the serial console switch for NVIDIA SN2100 switch console access, as follows:
  - 115200 baud
  - 8 data bits
  - 1 stop bit
  - parity: none
  - flow control: none

About this task

Be aware of the following:

> Each time Cumulus Linux is installed, the entire file system structure is erased and rebuilt.

> The default password for the cumulus user account is **cumulus**. The first time you log into Cumulus Linux, you must change this default password. Be sure to update any automation scripts before installing a new image. Cumulus Linux provides command line options to change the default password automatically during the installation process.

Example 6. Steps

Cumulus Linux 4.4.3

1. Log in to the switch.

   First time log in to the switch requires username/password of **cumulus**/**cumulus** with `sudo` privileges.

   ```
   cumulus login: cumulus
   Password: cumulus
   You are required to change your password immediately (administrator
   enforced)
   Changing password for cumulus.
   Current password: cumulus
   New password: <new_password>
   Retype new password: <new_password>
   ```

2. Check the Cumulus Linux version: `net show system`

   ```
   cumulus@cumulus:mgmt:~$ net show system
   Hostname..... cumulus
   Build..... Cumulus Linux 4.4.3
   Uptime..... 0:08:20.860000
   Model..... Mlnx X86
   CPU..... x86_64 Intel Atom C2558 2.40GHz
   Memory..... 8GB
   Disk..... 14.7GB
   ASIC..... Mellanox Spectrum MT52132
   Ports..... 16 x 100G-QSFP28
   Part Number..... MSN2100-CB2FC
   Serial Number.... MT2105T05177
   Platform Name.... x86_64-mlnx_x86-r0
   Product Name..... MSN2100
   ONIE Version..... 2019.11-5.2.0020-115200
   Base MAC Address. 04:3F:72:43:92:80
   Manufacturer..... Mellanox
   ```

3. Configure the hostname, IP address, subnet mask, and default gateway. The new hostname only becomes effective after restarting the console/SSH session.

   > A Cumulus Linux switch provides at least one dedicated Ethernet management port called `eth0`. This interface is specifically for out-of-band management use. By default, the management interface uses DHCPv4 for addressing.

Do not use an underscore (_), apostrophe ('), or non-ASCII characters in the hostname.

```
cumulus@cumulus:mgmt:~$ net add hostname sw1
cumulus@cumulus:mgmt:~$ net add interface eth0 ip address
10.233.204.71
cumulus@cumulus:mgmt:~$ net add interface eth0 ip gateway
10.233.204.1
cumulus@cumulus:mgmt:~$ net pending
cumulus@cumulus:mgmt:~$ net commit
```

This command modifies both the `/etc/hostname` and `/etc/hosts` files.

4. Confirm that the hostname, IP address, subnet mask, and default gateway have been updated.

```
cumulus@sw1:mgmt:~$ hostname sw1
cumulus@sw1:mgmt:~$ ifconfig eth0
eth0: flags=4163<UP,BROADCAST,RUNNING,MULTICAST>  mtu 1500
inet 10.233.204.71  netmask 255.255.254.0  broadcast 10.233.205.255
inet6 fe80::bace:f6ff:fe19:1df6  prefixlen 64  scopeid 0x20<link>
ether b8:ce:f6:19:1d:f6  txqueuelen 1000  (Ethernet)
RX packets 75364  bytes 23013528 (21.9 MiB)
RX errors 0  dropped 7  overruns 0  frame 0
TX packets 4053  bytes 827280 (807.8 KiB)
TX errors 0  dropped 0 overruns 0  carrier 0  collisions 0 device
memory 0xdfc00000-dfc1ffff

cumulus@sw1::mgmt:~$ ip route show vrf mgmt
default via 10.233.204.1 dev eth0
unreachable default metric 4278198272
10.233.204.0/23 dev eth0 proto kernel scope link src 10.233.204.71
127.0.0.0/8 dev mgmt proto kernel scope link src 127.0.0.1
```

5. Set the date, time, time zone, and NTP server on the switch.
   a. Verify the current time zone:

```
cumulus@sw1:~$ cat /etc/timezone
```

   b. Update to the new time zone:

```
cumulus@sw1:~$ sudo dpkg-reconfigure --frontend noninteractive
tzdata
```

c. Verify your current time zone:

```
cumulus@switch:~$ date +%Z
```

d. To set the time zone using the guided wizard, run the following command:

```
cumulus@sw1:~$ sudo dpkg-reconfigure tzdata
```

e. Set the software clock according to the configured time zone:

```
cumulus@switch:~$ sudo date -s "Tue Oct 28 00:37:13 2023"
```

f. Set the current value of the software clock to the hardware clock:

```
cumulus@switch:~$ sudo hwclock -w
```

g. Add an NTP server if required:

```
cumulus@sw1:~$ net add time ntp server <cumulus.network.ntp.org>
iburst
cumulus@sw1:~$ net pending
cumulus@sw1:~$ net commit
```

h. Verify that `ntpd` is running on the system:

```
cumulus@sw1:~$ ps -ef | grep ntp
ntp       4074     1  0 Jun20 ?        00:00:33 /usr/sbin/ntpd -p
/var/run/ntpd.pid -g -u 101:102
```

i. Specify the NTP source interface. By default, the source interface that NTP uses is `eth0`. You can configure a different NTP source interface as follows:

```
cumulus@sw1:~$ net add time ntp source <src_int>
cumulus@sw1:~$ net pending
cumulus@sw1:~$ net commit
```

6. Install Cumulus Linux 4.4.3:

```
cumulus@sw1:mgmt:~$ sudo onie-install -a -i http://<web-server>/<path>/cumulus-linux-4.4.3-mlx-amd64.bin
```

The installer starts the download. Type **y** when prompted.

7. Reboot the NVIDIA SN2100 switch:

```
cumulus@sw1:mgmt:~$ sudo reboot
```

8. The installation starts automatically, and the following GRUB screen choices appear. Do **not** make any selections.
   - Cumulus-Linux GNU/Linux
   - ONIE: Install OS
   - CUMULUS-INSTALL
   - Cumulus-Linux GNU/Linux
9. Repeat steps 1 to 4 to log in.
10. Verify that the Cumulus Linux version is 4.4.3: `net show version`

```
cumulus@sw1:mgmt:~$ net show version
NCLU_VERSION=1.0-cl4.4.3u0
DISTRIB_ID="Cumulus Linux"
DISTRIB_RELEASE=4.4.3
DISTRIB_DESCRIPTION="Cumulus Linux 4.4.3"
```

11. Create a new user and add this user to the `sudo` group. This user only becomes effective after the console/SSH session is restarted.

```
sudo adduser --ingroup netedit admin
```

```
cumulus@sw1:mgmt:~$ sudo adduser --ingroup netedit admin
[sudo] password for cumulus:
Adding user 'admin' ...
Adding new user 'admin' (1001) with group `netedit' ...
Creating home directory '/home/admin' ...
Copying files from '/etc/skel' ...
New password:
Retype new password:
passwd: password updated successfully
Changing the user information for admin
Enter the new value, or press ENTER for the default
Full Name []:
Room Number []:
Work Phone []:
Home Phone []:
Other []:
Is the information correct? [Y/n] y

cumulus@sw1:mgmt:~$ sudo adduser admin sudo
[sudo] password for cumulus:
Adding user `admin' to group `sudo' ...
Adding user admin to group sudo
Done.
cumulus@sw1:mgmt:~$ exit
logout
Connection to 10.233.204.71 closed.

[admin@cycrh6svl01 ~]$ ssh admin@10.233.204.71
admin@10.233.204.71's password:
Linux sw1 4.19.0-cl-1-amd64 #1 SMP Cumulus 4.19.206-1+cl4.4.1u1
(2021-09-09) x86_64
Welcome to NVIDIA Cumulus (R) Linux (R)

For support and online technical documentation, visit
http://www.cumulusnetworks.com/support

The registered trademark Linux (R) is used pursuant to a sublicense
from LMI, the exclusive licensee of Linus Torvalds, owner of the
mark on a world-wide basis.
admin@sw1:mgmt:~$
```

Cumulus Linux 5.4.0

1. Log in to the switch.

   First time log in to the switch requires username/password of **cumulus**/**cumulus** with `sudo`

privileges.

```
cumulus login: cumulus
Password: cumulus
You are required to change your password immediately (administrator
enforced)
Changing password for cumulus.
Current password: cumulus
New password: <new_password>
Retype new password: <new_password>
```

2. Check the Cumulus Linux version: `nv show system`

```
cumulus@cumulus:mgmt:~$ nv show system
operational         applied              description
------------------- -------------------- --------------------
hostname            cumulus              cumulus
build               Cumulus Linux 5.3.0  system build version
uptime              6 days, 8:37:36      system uptime
timezone            Etc/UTC              system time zone
```

3. Configure the hostname, IP address, subnet mask, and default gateway. The new hostname only becomes effective after restarting the console/SSH session.

   A Cumulus Linux switch provides at least one dedicated Ethernet management port called `eth0`. This interface is specifically for out-of-band management use. By default, the management interface uses DHCPv4 for addressing.

   Do not use an underscore (_), apostrophe ('), or non-ASCII characters in the hostname.

```
cumulus@cumulus:mgmt:~$ nv set system hostname sw1
cumulus@cumulus:mgmt:~$ nv set interface eth0 ip address
10.233.204.71/24
cumulus@cumulus:mgmt:~$ nv set interface eth0 ip gateway
10.233.204.1
cumulus@cumulus:mgmt:~$ nv config apply
cumulus@cumulus:mgmt:~$ nv config save
```

   This command modifies both the `/etc/hostname` and `/etc/hosts` files.

4. Confirm that the hostname, IP address, subnet mask, and default gateway have been updated.

```
cumulus@sw1:mgmt:~$ hostname sw1
cumulus@sw1:mgmt:~$ ifconfig eth0
eth0: flags=4163<UP,BROADCAST,RUNNING,MULTICAST>  mtu 1500
inet 10.233.204.71  netmask 255.255.254.0  broadcast 10.233.205.255
inet6 fe80::bace:f6ff:fe19:1df6  prefixlen 64  scopeid 0x20<link>
ether b8:ce:f6:19:1d:f6  txqueuelen 1000  (Ethernet)
RX packets 75364  bytes 23013528 (21.9 MiB)
RX errors 0  dropped 7  overruns 0  frame 0
TX packets 4053  bytes 827280 (807.8 KiB)
TX errors 0  dropped 0 overruns 0  carrier 0  collisions 0 device
memory 0xdfc00000-dfc1ffff

cumulus@sw1::mgmt:~$ ip route show vrf mgmt
default via 10.233.204.1 dev eth0
unreachable default metric 4278198272
10.233.204.0/23 dev eth0 proto kernel scope link src 10.233.204.71
127.0.0.0/8 dev mgmt proto kernel scope link src 127.0.0.1
```

5. Set the time zone, date, time, and NTP server on the switch.
   a. Set the time zone:

```
cumulus@sw1:~$ nv set system timezone US/Eastern
cumulus@sw1:~$ nv config apply
```

   b. Verify your current time zone:

```
cumulus@switch:~$ date +%Z
```

   c. To set the time zone using the guided wizard, run the following command:

```
cumulus@sw1:~$ sudo dpkg-reconfigure tzdata
```

   d. Set the software clock according to the configured time zone:

```
cumulus@sw1:~$ sudo date -s "Tue Oct 28 00:37:13 2023"
```

   e. Set the current value of the software clock to the hardware clock:

```
cumulus@sw1:~$ sudo hwclock -w
```

f. Add an NTP server if required:

```
cumulus@sw1:~$ nv set service ntp mgmt listen eth0
cumulus@sw1:~$ nv set service ntp mgmt server <server> iburst on
cumulus@sw1:~$ nv config apply
cumulus@sw1:~$ nv config save
```

See the Knowledge Base article NTP server configuration is not working with NVIDIA SN2100 switches for further details.

g. Verify that `ntpd` is running on the system:

```
cumulus@sw1:~$ ps -ef | grep ntp
ntp       4074     1  0 Jun20 ?        00:00:33 /usr/sbin/ntpd -p
/var/run/ntpd.pid -g -u 101:102
```

h. Specify the NTP source interface. By default, the source interface that NTP uses is `eth0`. You can configure a different NTP source interface as follows:

```
cumulus@sw1:~$ nv set service ntp default listen <src_int>
cumulus@sw1:~$ nv config apply
```

6. Install Cumulus Linux 5.4.0:

```
cumulus@sw1:mgmt:~$ sudo onie-install -a -i http://<web-
server>/<path>/cumulus-linux-5.4-mlx-amd64.bin
```

The installer starts the download. Type **y** when prompted.

7. Reboot the NVIDIA SN2100 switch:

```
cumulus@sw1:mgmt:~$ sudo reboot
```

8. The installation starts automatically, and the following GRUB screen choices appear. Do **not** make any selections.
   - Cumulus-Linux GNU/Linux
   - ONIE: Install OS
   - CUMULUS-INSTALL
   - Cumulus-Linux GNU/Linux
9. Repeat steps 1 to 4 to log in.
10. Verify that the Cumulus Linux version is 5.4.0: `nv show system`

```
cumulus@cumulus:mgmt:~$ nv show system
operational         applied              description
------------------- -------------------- --------------------
hostname            cumulus              cumulus
build               Cumulus Linux 5.4.0  system build version
uptime              6 days, 13:37:36     system uptime
timezone            Etc/UTC              system time zone
```

11. Verify that the nodes each have a connection to each switch:

```
cumulus@sw1:mgmt:~$ net show lldp

LocalPort  Speed  Mode        RemoteHost
RemotePort
---------  -----  ----------  ---------------------------------
-----------
eth0       100M   Mgmt        mgmt-sw1
Eth110/1/29
swp2s1     25G    Trunk/L2    node1
e0a
swp15      100G   BondMember  sw2
swp15
swp16      100G   BondMember  sw2
swp16
```

12. Create a new user and add this user to the `sudo` group. This user only becomes effective after the console/SSH session is restarted.

```
sudo adduser --ingroup netedit admin
```

```
cumulus@sw1:mgmt:~$ sudo adduser --ingroup netedit admin
[sudo] password for cumulus:
Adding user 'admin' ...
Adding new user 'admin' (1001) with group `netedit' ...
Creating home directory '/home/admin' ...
Copying files from '/etc/skel' ...
New password:
Retype new password:
passwd: password updated successfully
Changing the user information for admin
Enter the new value, or press ENTER for the default
Full Name []:
Room Number []:
Work Phone []:
Home Phone []:
Other []:
Is the information correct? [Y/n] y

cumulus@sw1:mgmt:~$ sudo adduser admin sudo
[sudo] password for cumulus:
Adding user `admin' to group `sudo' ...
Adding user admin to group sudo
Done.
cumulus@sw1:mgmt:~$ exit
logout
Connection to 10.233.204.71 closed.

[admin@cycrh6svl01 ~]$ ssh admin@10.233.204.71
admin@10.233.204.71's password:
Linux sw1 4.19.0-cl-1-amd64 #1 SMP Cumulus 4.19.206-1+cl4.4.1u1
(2021-09-09) x86_64
Welcome to NVIDIA Cumulus (R) Linux (R)

For support and online technical documentation, visit
http://www.cumulusnetworks.com/support

The registered trademark Linux (R) is used pursuant to a sublicense
from LMI, the exclusive licensee of Linus Torvalds, owner of the
mark on a world-wide basis.
admin@sw1:mgmt:~$
```

13. Add additional user groups for the admin user to access `nv` commands:

```
cumulus@sw1:mgmt:~$ sudo adduser admin nvshow
     [sudo] password for cumulus:
     Adding user 'admin' to group 'nvshow' ...
     Adding user admin to group nvshow
     Done.
```

See NVIDIA User Accounts for more information.

Cumulus Linux 5.11.0

1. Log in to the switch.

   When you log in to the switch for the first time, it requires the username/password of **cumulus** /**cumulus** with `sudo` privileges.

```
cumulus login: cumulus
Password: cumulus
You are required to change your password immediately (administrator
enforced)
Changing password for cumulus.
Current password: cumulus
New password: <new_password>
Retype new password: <new_password>
```

2. Check the Cumulus Linux version: `nv show system`

```
cumulus@cumulus:mgmt:~$ nv show system
operational         applied              description
------------------- -------------------- --------------------
hostname            cumulus              cumulus
build               Cumulus Linux 5.4.0  system build version
uptime              6 days, 8:37:36      system uptime
timezone            Etc/UTC              system time zone
```

3. Configure the hostname, IP address, subnet mask, and default gateway. The new hostname only becomes effective after restarting the console/SSH session.

   A Cumulus Linux switch provides at least one dedicated Ethernet management port called `eth0`. This interface is specifically for out-of-band management use. By default, the management interface uses DHCPv4 for addressing.

   Do not use an underscore (_), apostrophe ('), or non-ASCII characters in the hostname.

```
cumulus@cumulus:mgmt:~$ nv unset interface eth0 ip address dhcp
cumulus@cumulus:mgmt:~$ nv set interface eth0 ip address
10.233.204.71/24
cumulus@cumulus:mgmt:~$ nv set interface eth0 ip gateway
10.233.204.1
cumulus@cumulus:mgmt:~$ nv config apply
cumulus@cumulus:mgmt:~$ nv config save
```

This command modifies both the `/etc/hostname` and `/etc/hosts` files.

4. Confirm that the hostname, IP address, subnet mask, and default gateway have been updated.

```
cumulus@sw1:mgmt:~$ hostname sw1
cumulus@sw1:mgmt:~$ ifconfig eth0
eth0: flags=4163<UP,BROADCAST,RUNNING,MULTICAST>  mtu 1500
inet 10.233.204.71  netmask 255.255.254.0  broadcast 10.233.205.255
inet6 fe80::bace:f6ff:fe19:1df6  prefixlen 64  scopeid 0x20<link>
ether b8:ce:f6:19:1d:f6  txqueuelen 1000  (Ethernet)
RX packets 75364  bytes 23013528 (21.9 MiB)
RX errors 0  dropped 7  overruns 0  frame 0
TX packets 4053  bytes 827280 (807.8 KiB)
TX errors 0  dropped 0 overruns 0  carrier 0  collisions 0 device
memory 0xdfc00000-dfc1ffff

cumulus@sw1::mgmt:~$ ip route show vrf mgmt
default via 10.233.204.1 dev eth0
unreachable default metric 4278198272
10.233.204.0/23 dev eth0 proto kernel scope link src 10.233.204.71
127.0.0.0/8 dev mgmt proto kernel scope link src 127.0.0.1
```

5. Set the time zone, date, time, and NTP server on the switch.
   a. Set the time zone:

```
cumulus@sw1:~$ nv set system timezone US/Eastern
cumulus@sw1:~$ nv config apply
```

   b. Verify your current time zone:

```
cumulus@switch:~$ date +%Z
```

   c. To set the time zone using the guided wizard, run the following command:

```
cumulus@sw1:~$ sudo dpkg-reconfigure tzdata
```

d. Set the software clock according to the configured time zone:

```
cumulus@sw1:~$ sudo date -s "Tue Oct 28 00:37:13 2023"
```

e. Set the current value of the software clock to the hardware clock:

```
cumulus@sw1:~$ sudo hwclock -w
```

f. Add an NTP server if required:

```
cumulus@sw1:~$ nv set service ntp mgmt listen eth0
cumulus@sw1:~$ nv set service ntp mgmt server <server> iburst on
cumulus@sw1:~$ nv config apply
cumulus@sw1:~$ nv config save
```

See the Knowledge Base article NTP server configuration is not working with NVIDIA SN2100 switches for further details.

g. Verify that `ntpd` is running on the system:

```
cumulus@sw1:~$ ps -ef | grep ntp
ntp       4074     1  0 Jun20 ?        00:00:33 /usr/sbin/ntpd -p
/var/run/ntpd.pid -g -u 101:102
```

h. Specify the NTP source interface. By default, the source interface that NTP uses is `eth0`. You can configure a different NTP source interface as follows:

```
cumulus@sw1:~$ nv set service ntp default listen <src_int>
cumulus@sw1:~$ nv config apply
```

6. Install Cumulus Linux 5.11.0:

```
cumulus@sw1:mgmt:~$ sudo onie-install -a -i http://<web-
server>/<path>/cumulus-linux-5.11.0-mlx-amd64.bin
```

The installer starts the download. Type **y** when prompted.

7. Reboot the NVIDIA SN2100 switch:

```
cumulus@sw1:mgmt:~$ sudo reboot
```

8. The installation starts automatically, and the following GRUB screen choices appear. Do **not** make any selections.
   - Cumulus-Linux GNU/Linux
   - ONIE: Install OS
   - CUMULUS-INSTALL
   - Cumulus-Linux GNU/Linux
9. Repeat steps 1 to 4 to log in.
10. Verify that the Cumulus Linux version is 5.11.0:

    `nv show system`

```
cumulus@cumulus:mgmt:~$ nv show system
operational         applied                 description
------------------- ----------------------- --------------------
build               Cumulus Linux 5.11.0
uptime              153 days, 2:44:16
hostname            cumulus                 cumulus
product-name        Cumulus Linux
product-release     5.11.0
platform            x86_64-mlnx_x86-r0
system-memory       2.76 GB used / 2.28 GB free / 7.47 GB total
swap-memory         0 Bytes used / 0 Bytes free / 0 Bytes total
health-status       not OK
date-time           2025-04-23 09:55:24
status              N/A
timezone            Etc/UTC
maintenance
  mode              disabled
  ports             enabled
version
  kernel            6.1.0-cl-1-amd64
  build-date        Thu Nov 14 13:06:38 UTC 2024
  image             5.11.0
  onie              2019.11-5.2.0020-115200
```

11. Verify that each node has a connection to each switch:

```
cumulus@sw1:mgmt:~$ nv show interface lldp

LocalPort  Speed  Mode        RemoteHost
RemotePort
---------  -----  ----------  ---------------------------------
-----------
eth0       100M   eth   mgmt-sw1
Eth110/1/14
swp2s1     25G    Trunk/L2    node1
e0a
swp1s1     10G    swp   sw2
e0a
swp9       100G   swp   sw3
e4a
swp10      100G   swp   sw4
e4a
swp15      100G   swp   sw5
swp15
swp16      100G   swp   sw6
swp16
```

See NVIDIA User Accounts for more information.

What's next?

After you've installed Cumulus Linux in Cumulus mode, you can install or upgrade the RCF script.

Install Cumulus Linux in ONIE mode

Follow this procedure to install Cumulus Linux (CL) OS when the switch is running in ONIE mode.

Cumulus Linux (CL) OS can be installed either when the switch is running Cumulus Linux or ONIE (see Install in Cumulus mode).

About this task

You can install the Cumulus Linux using Open Network Install Environment (ONIE) that allows for automatic discovery of a network installer image. This facilitates the system model of securing switches with an operating system choice, such as Cumulus Linux. The easiest way to install Cumulus Linux with ONIE is with local HTTP discovery.

If your host is IPv6-enabled, make sure it is running a web server. If your host is IPv4-enabled, make sure it is running DHCP in addition to a web server.

This procedure demonstrates how to upgrade Cumulus Linux after the admin has booted in ONIE.

Steps

1. Download the Cumulus Linux installation file to the root directory of the web server. Rename this file `onie-installer`.
2. Connect your host to the management Ethernet port of the switch using an Ethernet cable.
3. Power on the switch. The switch downloads the ONIE image installer and boots. After the installation completes, the Cumulus Linux login prompt appears in the terminal window.

   Each time Cumulus Linux is installed, the entire file system structure is erased and rebuilt.

4. Reboot the SN2100 switch:

```
cumulus@cumulus:mgmt:~$ sudo reboot
```

5. Press the **Esc** key at the GNU GRUB screen to interrupt the normal boot process, select **ONIE** and press **Enter**.
6. On the next screen displayed, select **ONIE: Install OS**.
7. The ONIE installer discovery process runs searching for the automatic installation. Press **Enter** to temporarily stop the process.
8. When the discovery process has stopped:

```
ONIE:/ # onie-stop
discover: installer mode detected.
Stopping: discover...start-stop-daemon: warning: killing process 427:
No such process done.
```

9. If the DHCP service is running on your network, verify that the IP address, subnet mask, and the default gateway are correctly assigned:

```
ifconfig eth0
```

Show example

```
ONIE:/ # ifconfig eth0
eth0   Link encap:Ethernet  HWaddr B8:CE:F6:19:1D:F6
       inet addr:10.233.204.71  Bcast:10.233.205.255
Mask:255.255.254.0
       inet6 addr: fe80::bace:f6ff:fe19:1df6/64 Scope:Link
       UP BROADCAST RUNNING MULTICAST  MTU:1500  Metric:1
       RX packets:21344 errors:0 dropped:2135 overruns:0 frame:0
       TX packets:3500 errors:0 dropped:0 overruns:0 carrier:0
       collisions:0 txqueuelen:1000
       RX bytes:6119398 (5.8 MiB)  TX bytes:472975 (461.8 KiB)
       Memory:dfc00000-dfc1ffff

ONIE:/ # route
Kernel IP routing table
Destination     Gateway         Genmask         Flags Metric Ref
Use Iface

default         10.233.204.1    0.0.0.0         UG    0      0
0   eth0
10.233.204.0    *               255.255.254.0   U     0      0
0   eth0
```

10. If the IP addressing scheme is manually defined, do the following:

```
ONIE:/ # ifconfig eth0 10.233.204.71 netmask 255.255.254.0
ONIE:/ # route add default gw 10.233.204.1
```

11. Repeat step 9 to verify that the static information is correctly entered.
12. Install Cumulus Linux:

```
ONIE:/ # route

  Kernel IP routing table

  ONIE:/ # onie-nos-install http://<web-server>/<path>/cumulus-linux-
4.4.3-mlx-amd64.bin

  Stopping: discover... done.
  Info: Attempting
http://10.60.132.97/x/eng/testbedN,svl/nic/files/cumulus-linux-4.4.3-
mlx-amd64.bin ...
  Connecting to 10.60.132.97 (10.60.132.97:80)
  installer            100% |*|   552M  0:00:00 ETA
  ...
  ...
```

13. Once the installation has completed, log in to the switch:

Show example

```
cumulus login: cumulus
Password: cumulus
You are required to change your password immediately (administrator
enforced)
Changing password for cumulus.
Current password: cumulus
New password: <new_password>
Retype new password: <new_password>
```

14. Verify the Cumulus Linux version:

```
net show version
```

Show example

```
cumulus@cumulus:mgmt:~$ net show version
NCLU_VERSION=1.0-cl4.4.3u4
DISTRIB_ID="Cumulus Linux"
DISTRIB_RELEASE=4.4.3
DISTRIB_DESCRIPTION="Cumulus Linux 4.4.3”
```

What’s next?

After you've installed Cumulus Linux in ONIE mode, you can install or upgrade the RCF script.

Install or upgrade the RCF script

Follow this procedure to install or upgrade the RCF script.

Before you begin

Before installing or upgrading the RCF script, make sure that the following are available on the switch:

- Cumulus Linux 4.4.3 is installed.
- IP address, subnet mask, and default gateway defined via DHCP or manually configured.

Current RCF script versions

There are two RCF scripts available for Clustering and Storage applications. The procedure for each is the same.

- Clustering: **MSN2100-RCF-v1.*x*-Cluster**
- Storage: **MSN2100-RCF-v1.*x*-Storage**

> The following example procedure shows how to download and apply the RCF script for Cluster switches.

> Example command output uses switch management IP address 10.233.204.71, netmask 255.255.254.0 and default gateway 10.233.204.1.

Steps

1. Display the available interfaces on the SN2100 switch:

```
net show interface all
```

Show example

```
cumulus@cumulus:mgmt:~$ net show interface all

State  Name   Spd  MTU    Mode          LLDP                 Summary
-----  -----  ---  -----  -----------  -------------------
--------------
...
...
ADMDN  swp1   N/A  9216   NotConfigured
ADMDN  swp2   N/A  9216   NotConfigured
ADMDN  swp3   N/A  9216   NotConfigured
ADMDN  swp4   N/A  9216   NotConfigured
ADMDN  swp5   N/A  9216   NotConfigured
ADMDN  swp6   N/A  9216   NotConfigured
ADMDN  swp7   N/A  9216   NotConfigure
ADMDN  swp8   N/A  9216   NotConfigured
ADMDN  swp9   N/A  9216   NotConfigured
ADMDN  swp10  N/A  9216   NotConfigured
ADMDN  swp11  N/A  9216   NotConfigured
ADMDN  swp12  N/A  9216   NotConfigured
ADMDN  swp13  N/A  9216   NotConfigured
ADMDN  swp14  N/A  9216   NotConfigured
ADMDN  swp15  N/A  9216   NotConfigured
ADMDN  swp16  N/A  9216   NotConfigured
```

2. Copy the RCF python script to the switch:

```
admin@sw1:mgmt:~$ pwd
/home/cumulus
cumulus@cumulus:mgmt:~$ cd /tmp
cumulus@cumulus:mgmt:/tmp$ scp <user>@<host:/<path>/MSN2100-RCF-v1.8-
Cluster
ssologin@10.233.204.71's password:
MSN2100-RCF-v1.8-Cluster                  100% 8607   111.2KB/s
00:00
```

3. Apply the RCF python script **MSN2100-RCF-v1.8-Cluster**:

```
cumulus@cumulus:mgmt:/tmp$ sudo python3 MSN2100-RCF-v1.8-Cluster
[sudo] password for cumulus:
...
Step 1: Creating the banner file
Step 2: Registering banner message
Step 3: Updating the MOTD file
Step 4: Ensuring passwordless use of cl-support command by admin
Step 5: Disabling apt-get
Step 6: Creating the interfaces
Step 7: Adding the interface config
Step 8: Disabling cdp
Step 9: Adding the lldp config
Step 10: Adding the RoCE base config
Step 11: Modifying RoCE Config
Step 12: Configure SNMP
Step 13: Reboot the switch
```

The RCF script completes the steps listed above.

> For any RCF python script issues that cannot be corrected, contact NetApp Support for assistance.

4. Reapply any previous customizations to the switch configuration. Refer to Review cabling and configuration considerations for details of any further changes required.
5. Verify the configuration after the reboot:

```
net show interface all
```

Show example

```
cumulus@cumulus:mgmt:~$ net show interface all

State  Name      Spd   MTU    Mode       LLDP               Summary
-----  --------- ----  -----  ---------- ------------------ --------
...
...
DN     swp1s0    N/A   9216   Trunk/L2                      Master:
bridge(UP)
DN     swp1s1    N/A   9216   Trunk/L2                      Master:
bridge(UP)
DN     swp1s2    N/A   9216   Trunk/L2                      Master:
bridge(UP)
DN     swp1s3    N/A   9216   Trunk/L2                      Master:
bridge(UP)
DN     swp2s0    N/A   9216   Trunk/L2                      Master:
bridge(UP)
DN     swp2s1    N/A   9216   Trunk/L2                      Master:
bridge(UP)
DN     swp2s2    N/A   9216   Trunk/L2                      Master:
bridge(UP)
DN     swp2s3    N/A   9216   Trunk/L2                      Master:
bridge(UP)
UP     swp3      100G  9216   Trunk/L2                      Master:
bridge(UP)
UP     swp4      100G  9216   Trunk/L2                      Master:
bridge(UP)
DN     swp5      N/A   9216   Trunk/L2                      Master:
bridge(UP)
DN     swp6      N/A   9216   Trunk/L2                      Master:
bridge(UP)
DN     swp7      N/A   9216   Trunk/L2                      Master:
bridge(UP)
DN     swp8      N/A   9216   Trunk/L2                      Master:
bridge(UP)
DN     swp9      N/A   9216   Trunk/L2                      Master:
bridge(UP)
DN     swp10     N/A   9216   Trunk/L2                      Master:
bridge(UP)
DN     swp11     N/A   9216   Trunk/L2                      Master:
bridge(UP)
DN     swp12     N/A   9216   Trunk/L2                      Master:
bridge(UP)
DN     swp13     N/A   9216   Trunk/L2                      Master:
bridge(UP)
```

```
DN     swp14     N/A   9216   Trunk/L2                    Master:
bridge(UP)
UP     swp15     N/A   9216   BondMember                  Master:
bond_15_16(UP)
UP     swp16     N/A   9216   BondMember                  Master:
bond_15_16(UP)
...
...

cumulus@cumulus:mgmt:~$ net show roce config
RoCE mode.......... lossless
Congestion Control:
  Enabled SPs.... 0 2 5
  Mode........... ECN
  Min Threshold.. 150 KB
  Max Threshold.. 1500 KB
PFC:
  Status......... enabled
  Enabled SPs.... 2 5
  Interfaces......... swp10-16,swp1s0-3,swp2s0-3,swp3-9

DSCP                     802.1p  switch-priority
-----------------------  ------  ---------------
0 1 2 3 4 5 6 7               0                0
8 9 10 11 12 13 14 15         1                1
16 17 18 19 20 21 22 23       2                2
24 25 26 27 28 29 30 31       3                3
32 33 34 35 36 37 38 39       4                4
40 41 42 43 44 45 46 47       5                5
48 49 50 51 52 53 54 55       6                6
56 57 58 59 60 61 62 63       7                7

switch-priority  TC  ETS
---------------  --  --------
0 1 3 4 6 7       0  DWRR 28%
2                 2  DWRR 28%
5                 5  DWRR 43%
```

6. Verify information for the transceiver in the interface:

```
net show interface pluggables
```

Show example

```
cumulus@cumulus:mgmt:~$ net show interface pluggables
Interface  Identifier     Vendor Name  Vendor PN        Vendor SN
    Vendor Rev
---------  -------------  -----------  ---------------
--------------  ----------
swp3       0x11 (QSFP28)  Amphenol     112-00574
APF20379253516  B0
swp4       0x11 (QSFP28)  AVAGO        332-00440        AF1815GU05Z
    A0
swp15      0x11 (QSFP28)  Amphenol     112-00573
APF21109348001  B0
swp16      0x11 (QSFP28)  Amphenol     112-00573
APF21109347895  B0
```

7. Verify that the nodes each have a connection to each switch:

   ```
   net show lldp
   ```

   Show example

   ```
   cumulus@cumulus:mgmt:~$ net show lldp

   LocalPort  Speed  Mode        RemoteHost              RemotePort
   ---------  -----  ----------  ----------------------  -----------
   swp3       100G   Trunk/L2    sw1                     e3a
   swp4       100G   Trunk/L2    sw2                     e3b
   swp15      100G   BondMember  sw13                    swp15
   swp16      100G   BondMember  sw14                    swp16
   ```

8. Verify the health of cluster ports on the cluster.
   a. Verify that e0d ports are up and healthy across all nodes in the cluster:

      ```
      network port show -role cluster
      ```

Show example

```
cluster1::*> network port show -role cluster

Node: node1

Ignore
                                                        Speed(Mbps)
Health   Health
Port      IPspace      Broadcast Domain Link MTU  Admin/Oper
Status   Status
--------- ------------ ---------------- ---- ---- -----------
-------- ------
e3a       Cluster      Cluster          up   9000  auto/10000
healthy  false
e3b       Cluster      Cluster          up   9000  auto/10000
healthy  false

Node: node2

Ignore
                                                        Speed(Mbps)
Health   Health
Port      IPspace      Broadcast Domain Link MTU  Admin/Oper
Status   Status
--------- ------------ ---------------- ---- ---- -----------
-------- ------
e3a       Cluster      Cluster          up   9000  auto/10000
healthy  false
e3b       Cluster      Cluster          up   9000  auto/10000
healthy  false
```

b. Verify the switch health from the cluster (this might not show switch sw2, since LIFs are not homed on e0d).

Show example

```
cluster1::*> network device-discovery show -protocol lldp
Node/       Local  Discovered
Protocol    Port   Device (LLDP: ChassisID)  Interface Platform
----------- ------ ------------------------- --------- ----------
node1/lldp
            e3a    sw1 (b8:ce:f6:19:1a:7e)   swp3      -
            e3b    sw2 (b8:ce:f6:19:1b:96)   swp3      -

node2/lldp
            e3a    sw1 (b8:ce:f6:19:1a:7e)   swp4      -
            e3b    sw2 (b8:ce:f6:19:1b:96)   swp4      -


cluster1::*> system switch ethernet show -is-monitoring-enabled
-operational true
Switch                      Type               Address
Model
--------------------------- ------------------ ----------------
-----
sw1                         cluster-network    10.233.205.90
MSN2100-CB2RC
     Serial Number: MNXXXXXXGD
      Is Monitored: true
            Reason: None
  Software Version: Cumulus Linux version 4.4.3 running on
Mellanox
                    Technologies Ltd. MSN2100
    Version Source: LLDP

sw2                         cluster-network    10.233.205.91
MSN2100-CB2RC
     Serial Number: MNCXXXXXXGS
      Is Monitored: true
            Reason: None
  Software Version: Cumulus Linux version 4.4.3 running on
Mellanox
                    Technologies Ltd. MSN2100
    Version Source: LLDP
```

What's next?

After you've installed or upgraded the RCF, you can install the CSHM file.

Install the Ethernet Switch Health Monitor configuration file

Follow this procedure to install the applicable configuration file for Ethernet switch health monitoring of NVIDIA cluster switches.
Supported models are:

- MSN2100-CB2FC
- MSN2100-CB2RC
- X190006-PE
- X190006-PI

This installation procedure applies to ONTAP 9.10.1 and later.

Before you begin

- Verify that you need to download the configuration file by running `system switch ethernet show` and checking if **OTHER** is shown for your model.

  If your model is still showing **OTHER** after applying the configuration file, contact NetApp support.

- Make sure that the ONTAP cluster is up and running.
- Enable SSH to use all of the features available in CSHM.
- Clear the `/mroot/etc/cshm_nod/nod_sign/` directory on all nodes:
  a. Enter the nodeshell:

     ```
     system node run -node <name>
     ```

  b. Change to advanced privilege:

     ```
     priv set advanced
     ```

  c. List the configuration files in the `/etc/cshm_nod/nod_sign` directory. If the directory exists and contains configuration files, it lists the file names.

     ```
     ls /etc/cshm_nod/nod_sign
     ```

  d. Delete all configuration files corresponding to your connected switch models.

     If you are unsure, remove all configuration files for the supported models listed above, then download and install the latest configuration files for those same models.

     ```
     rm /etc/cshm_nod/nod_sign/<filename>
     ```

  e. Confirm that the deleted configuration files are no longer in the directory:

     ```
     ls /etc/cshm_nod/nod_sign
     ```

Steps

1. Download the Ethernet switch health monitor configuration zip file based on the corresponding ONTAP release version. This file is available from the NVIDIA Ethernet switches page.

a. On the NVIDIA SN2100 Software download page, select **Nvidia CSHM File**.

b. On the Caution/Must read page, select the check box to agree.

c. On the End User License Agreement page, select the check box to agree and click **Accept & Continue**.

d. On the Nvidia CSHM File - Download page, select the applicable configuration file. The following files are available:

ONTAP 9.15.1 and later

- MSN2100-CB2FC-v1.4.zip
- MSN2100-CB2RC-v1.4.zip
- X190006-PE-v1.4.zip
- X190006-PI-v1.4.zip

ONTAP 9.11.1 through 9.14.1

- MSN2100-CB2FC_PRIOR_R9.15.1-v1.4.zip
- MSN2100-CB2RC_PRIOR_R9.15.1-v1.4.zip
- X190006-PE_PRIOR_9.15.1-v1.4.zip
- X190006-PI_PRIOR_9.15.1-v1.4.zip

2. Upload the applicable zip file to your internal web server.
3. Access the advanced mode setting from one of the ONTAP systems in the cluster.

```
set -privilege advanced
```

4. Run the switch health monitor configure command.

```
cluster1::> system switch ethernet configure-health-monitor
```

5. Verify that the command output ends with the following text for your ONTAP version:

ONTAP 9.15.1 and later

Ethernet switch health monitoring installed the configuration file.

ONTAP 9.11.1 through 9.14.1

SHM installed the configuration file.

ONTAP 9.10.1

CSHM downloaded package processed successfully.

If an error occurs, contact NetApp support.

6. Wait up to twice the Ethernet switch health monitor polling interval, found by running `system switch ethernet polling-interval show`, before completing the next step.

7. Run the command `system switch ethernet configure-health-monitor show` on the ONTAP system and make sure that the cluster switches are discovered with the monitored field set to **True** and the serial number field not showing **Unknown**.

```
cluster1::> system switch ethernet configure-health-monitor show
```

What's next?

After you've installed the CSHM file, you can configure switch health monitoring.

Reset the SN2100 storage switch to factory defaults

To reset the SN2100 storage switch to factory defaults:

- For Cumulus Linux 5.10 and earlier, you apply the Cumulus image.
- For Cumulus Linux 5.11 and later, you use the `nv action reset system factory-default` command.

About this task

- You must be connected to the switch using the serial console.
- You must have the root password for sudo access to the commands.

For more information about installing Cumulus Linux, see Software install workflow for NVIDIA SN2100 switches.

Example 7. Steps

Cumulus Linux 5.10 and earlier

1. From the Cumulus console, download and queue the switch software installation with the command `onie-install -a -i` followed by the file path to the switch software, for example:

```
cumulus@sw1:mgmt:~$ sudo onie-install -a -i http://<web-
server>/<path>/cumulus-linux-5.10.0-mlx-amd64.bin
```

2. The installer starts the download. Type **y** when prompted to confirm the installation when the image is downloaded and verified.
3. Reboot the switch to install the new software.

   `sudo reboot`

```
cumulus@sw1:mgmt:~$ sudo reboot
```

> The switch reboots and enters the switch software installation which takes some time. When the installation is complete, the switch reboots and remains at the `log-in` prompt.

Cumulus Linux 5.11 and later

1. To reset the switch to the factory defaults and remove all configuration, system files, and log files, run:

   `nv action reset system factory-default`

   For example:

```
cumulus@switch:~$ nv action reset system factory-default

This operation will reset the system configuration, delete the log
files and reboot the switch.
Type [y] continue.
Type [n] to abort.
Do you want to continue? [y/n] y
```

See the NVIDIA Factory Reset documentation for further details.

What's next

After you've reset your switches, you can reconfigure them as needed.

Migrate switches

Migrate from a Cisco storage switch to a NVIDIA SN2100 storage switch

You can migrate older Cisco switches for an ONTAP cluster to NVIDIA SN2100 storage switches. This is a non-disruptive procedure.

Review requirements

The following storage switches are supported:

- Cisco Nexus 9336C-FX2
- Cisco Nexus 3232C
- See the Hardware Universe for full details of supported ports and their configurations.

Before you begin

Make sure that you have the following:

- The existing cluster is properly set up and functioning.
- All storage ports are in the up state to ensure nondisruptive operations.
- The NVIDIA SN2100 storage switches are configured and operating under the proper version of Cumulus Linux installed with the reference configuration file (RCF) applied.
- The existing storage network configuration has the following:
  - A redundant and fully functional NetApp cluster using both older Cisco switches.
  - Management connectivity and console access to both the older Cisco switches and the new switches.
  - All cluster LIFs in the up state with the cluster LIFs are on their home ports.
  - ISL ports enabled and cabled between the older Cisco switches and between the new switches.
- See the Hardware Universe for full details of supported ports and their configurations.
- Some of the ports are configured on NVIDIA SN2100 switches to run at 100 GbE.
- You have planned, migrated, and documented 100 GbE connectivity from nodes to NVIDIA SN2100 storage switches.

Migrate the switches

About the examples

In this procedure, Cisco Nexus 9336C-FX2 storage switches are used for example commands and outputs.

The examples in this procedure use the following switch and node nomenclature:

- The existing Cisco Nexus 9336C-FX2 storage switches are *S1* and *S2*.
- The new NVIDIA SN2100 storage switches are *sw1* and *sw2*.
- The nodes are *node1* and *node2*.
- The cluster LIFs are *node1_clus1* and *node1_clus2* on node 1, and *node2_clus1* and *node2_clus2* on node 2 respectively.
- The `cluster1::*>` prompt indicates the name of the cluster.
- The network ports used in this procedure are *e5a* and *e5b*.

- Breakout ports take the format: swp1s0-3. For example four breakout ports on swp1 are *swp1s0*, *swp1s1*, *swp1s2*, and *swp1s3*.
- Switch S2 is replaced by switch sw2 first and then switch S1 is replaced by switch sw1.
  - Cabling between the nodes and S2 are then disconnected from S2 and reconnected to sw2.
  - Cabling between the nodes and S1 are then disconnected from S1 and reconnected to sw1.

Step 1: Prepare for migration

1. If AutoSupport is enabled, suppress automatic case creation by invoking an AutoSupport message:

   `system node autosupport invoke -node * -type all -message MAINT=xh`

   where *x* is the duration of the maintenance window in hours.

2. Change the privilege level to advanced, entering **y** when prompted to continue:

   `set -privilege advanced`

   The advanced prompt (*>) appears.

3. Determine the administrative or operational status for each storage interface:

   Each port should display enabled for `Status`.

Step 2: Configure cables and ports

1. Display the network port attributes:

   `storage port show`

   Show example

```
cluster1::*> storage port show
                                  Speed                      VLAN
Node           Port Type  Mode    (Gb/s) State    Status       ID
-------------- ---- ----- ------- ------ -------- --------- ----
node1
               e0c  ENET  storage  100   enabled  online      30
               e0d  ENET  storage    0   enabled  offline     30
               e5a  ENET  storage    0   enabled  offline     30
               e5b  ENET  storage  100   enabled  online      30
node2
               e0c  ENET  storage  100   enabled  online      30
               e0d  ENET  storage    0   enabled  offline     30
               e5a  ENET  storage    0   enabled  offline     30
               e5b  ENET  storage  100   enabled  online      30
cluster1::*>
```

2. Verify that the storage ports on each node are connected to existing storage switches in the following way (from the nodes' perspective) using the command:

   ```
   network device-discovery show -protocol lldp
   ```

   Show example

   ```
   cluster1::*> network device-discovery show -protocol lldp
   Node/       Local  Discovered
   Protocol    Port   Device (LLDP: ChassisID)  Interface
   Platform
   ----------- ------ ------------------------- --------------
   ----------------
   node1      /lldp
               e0c    S1 (7c:ad:4f:98:6d:f0)    Eth1/1           -
               e5b    S2 (7c:ad:4f:98:8e:3c)    Eth1/1           -
   node2      /lldp
               e0c    S1 (7c:ad:4f:98:6d:f0)    Eth1/2           -
               e5b    S2 (7c:ad:4f:98:8e:3c)    Eth1/2           -
   ```

3. On switch S1 and S2, make sure that the storage ports and switches are connected in the following way (from the switches' perspective) using the command:

   ```
   show lldp neighbors
   ```

Show example

```
S1# show lldp neighbors

Capability Codes: (R) Router, (B) Bridge, (T) Telephone, (C) DOCSIS
Cable Device,
                  (W) WLAN Access Point, (P) Repeater, (S) Station
(O) Other

Device-ID             Local Intf     Holdtime    Capability
Port ID
node1                 Eth1/1         121         S
e0c
node2                 Eth1/2         121         S
e0c
SHFGD1947000186       Eth1/10        120         S
  e0a
SHFGD1947000186       Eth1/11        120         S
  e0a
SHFGB2017000269       Eth1/12        120         S
  e0a
SHFGB2017000269       Eth1/13        120         S
  e0a

S2# show lldp neighbors

Capability Codes: (R) Router, (B) Bridge, (T) Telephone, (C) DOCSIS
Cable Device,
                  (W) WLAN Access Point, (P) Repeater, (S) Station
(O) Other

Device-ID             Local Intf     Holdtime    Capability
Port ID
node1                 Eth1/1         121         S
e5b
node2                 Eth1/2         121         S
e5b
SHFGD1947000186       Eth1/10        120         S
 e0b
SHFGD1947000186       Eth1/11        120         S
 e0b
SHFGB2017000269       Eth1/12        120         S
 e0b
SHFGB2017000269       Eth1/13        120         S
 e0b
```

4. On switch sw2, shut down the ports connected to the storage ports and nodes of the disk shelves.

Show example

```
cumulus@sw2:~$ net add interface swp1-16 link down
cumulus@sw2:~$ net pending
cumulus@sw2:~$ net commit
```

5. Move the node storage ports of the controller and disk shelves from the old switch S2 to the new switch sw2, using appropriate cabling supported by NVIDIA SN2100.
6. On switch sw2, bring up the ports connected to the storage ports of the nodes and the disk shelves.

Show example

```
cumulus@sw2:~$ net del interface swp1-16 link down
cumulus@sw2:~$ net pending
cumulus@sw2:~$ net commit
```

7. Verify that the storage ports on each node are now connected to the switches in the following way, from the nodes' perspective:

```
network device-discovery show -protocol lldp
```

Show example

```
cluster1::*> network device-discovery show -protocol lldp

Node/       Local  Discovered
Protocol    Port   Device (LLDP: ChassisID)  Interface      Platform
----------- ------ ------------------------- -------------
----------------
node1      /lldp
            e0c    S1 (7c:ad:4f:98:6d:f0)    Eth1/1         -
            e5b    sw2 (b8:ce:f6:19:1a:7e)   swp1           -

node2      /lldp
            e0c    S1 (7c:ad:4f:98:6d:f0)    Eth1/2         -
            e5b    sw2 (b8:ce:f6:19:1a:7e)   swp2           -
```

8. Verify the network port attributes:

```
storage port show
```

Show example

```
cluster1::*> storage port show
                                  Speed                       VLAN
Node           Port Type  Mode    (Gb/s) State    Status       ID
-------------- ---- ----- ------- ------ -------- --------- ----
node1
               e0c  ENET  storage  100   enabled  online       30
               e0d  ENET  storage    0   enabled  offline      30
               e5a  ENET  storage    0   enabled  offline      30
               e5b  ENET  storage  100   enabled  online       30
node2
               e0c  ENET  storage  100   enabled  online       30
               e0d  ENET  storage    0   enabled  offline      30
               e5a  ENET  storage    0   enabled  offline      30
               e5b  ENET  storage  100   enabled  online       30
cluster1::*>
```

9. On switch sw2, verify that all node storage ports are up:

   `net show interface`

Show example

```
cumulus@sw2:~$ net show interface

State  Name    Spd   MTU    Mode        LLDP
Summary
-----  ------  ----  -----  ----------  --------------------
--------------------
...
...
UP     swp1    100G  9216   Trunk/L2   node1 (e5b)
Master: bridge(UP)
UP     swp2    100G  9216   Trunk/L2   node2 (e5b)
Master: bridge(UP)
UP     swp3    100G  9216   Trunk/L2   SHFFG1826000112 (e0b)
Master: bridge(UP)
UP     swp4    100G  9216   Trunk/L2   SHFFG1826000112 (e0b)
Master: bridge(UP)
UP     swp5    100G  9216   Trunk/L2   SHFFG1826000102 (e0b)
Master: bridge(UP)
UP     swp6    100G  9216   Trunk/L2   SHFFG1826000102 (e0b)
Master: bridge(UP))
...
...
```

10. On switch sw1, shut down the ports connected to the storage ports of the nodes and the disk shelves.

Show example

```
cumulus@sw1:~$ net add interface swp1-16 link down
cumulus@sw1:~$ net pending
cumulus@sw1:~$ net commit
```

11. Move the node storage ports of the controller and the disk shelves from the old switch S1 to the new switch sw1, using appropriate cabling supported by NVIDIA SN2100.
12. On switch sw1, bring up the ports connected to the storage ports of the nodes and the disk shelves.

Show example

```
cumulus@sw1:~$ net del interface swp1-16 link down
cumulus@sw1:~$ net pending
cumulus@sw1:~$ net commit
```

13. Verify that the storage ports on each node are now connected to the switches in the following way, from the nodes' perspective:

    `network device-discovery show -protocol lldp`

    Show example

```
cluster1::*> network device-discovery show -protocol lldp

Node/       Local  Discovered
Protocol    Port   Device (LLDP: ChassisID)  Interface
Platform
----------- ------ ------------------------- --------------
----------------
node1      /lldp
            e0c    sw1 (b8:ce:f6:19:1b:96)   swp1            -
            e5b    sw2 (b8:ce:f6:19:1a:7e)   swp1            -

node2      /lldp
            e0c    sw1  (b8:ce:f6:19:1b:96)  swp2            -
            e5b    sw2  (b8:ce:f6:19:1a:7e)  swp2            -
```

Step 3: Verify the configuration

1. Verify the final configuration:

   `storage port show`

   Each port should display enabled for `State` and enabled for `Status`.

Show example

```
cluster1::*> storage port show
                                  Speed                       VLAN
Node           Port Type  Mode    (Gb/s) State    Status       ID
-------------- ---- ----- ------- ------ -------- --------- ----
node1
               e0c  ENET  storage  100   enabled  online       30
               e0d  ENET  storage    0   enabled  offline      30
               e5a  ENET  storage    0   enabled  offline      30
               e5b  ENET  storage  100   enabled  online       30
node2
               e0c  ENET  storage  100   enabled  online       30
               e0d  ENET  storage    0   enabled  offline      30
               e5a  ENET  storage    0   enabled  offline      30
               e5b  ENET  storage  100   enabled  online       30
cluster1::*>
```

2. On switch sw2, verify that all node storage ports are up:

   `net show interface`

Show example

```
cumulus@sw2:~$ net show interface

State  Name    Spd   MTU    Mode        LLDP
Summary
-----  ------  ----  -----  ----------  --------------------
--------------------
...
...
UP     swp1    100G  9216   Trunk/L2   node1 (e5b)
Master: bridge(UP)
UP     swp2    100G  9216   Trunk/L2   node2 (e5b)
Master: bridge(UP)
UP     swp3    100G  9216   Trunk/L2   SHFFG1826000112 (e0b)
Master: bridge(UP)
UP     swp4    100G  9216   Trunk/L2   SHFFG1826000112 (e0b)
Master: bridge(UP)
UP     swp5    100G  9216   Trunk/L2   SHFFG1826000102 (e0b)
Master: bridge(UP)
UP     swp6    100G  9216   Trunk/L2   SHFFG1826000102 (e0b)
Master: bridge(UP))
...
...
```

3. Verify that both nodes each have one connection to each switch:

   ```
   net show lldp
   ```

Show example

The following example shows the appropriate results for both switches:

```
cumulus@sw1:~$ net show lldp
LocalPort  Speed  Mode      RemoteHost              RemotePort
---------  -----  --------  ----------------------  -----------
...
swp1       100G   Trunk/L2  node1                   e0c
swp2       100G   Trunk/L2  node2                   e0c
swp3       100G   Trunk/L2  SHFFG1826000112        e0a
swp4       100G   Trunk/L2  SHFFG1826000112        e0a
swp5       100G   Trunk/L2  SHFFG1826000102        e0a
swp6       100G   Trunk/L2  SHFFG1826000102        e0a

cumulus@sw2:~$ net show lldp
LocalPort  Speed  Mode      RemoteHost              RemotePort
---------  -----  --------  ----------------------  -----------
...
swp1       100G   Trunk/L2  node1                   e5b
swp2       100G   Trunk/L2  node2                   e5b
swp3       100G   Trunk/L2  SHFFG1826000112        e0b
swp4       100G   Trunk/L2  SHFFG1826000112        e0b
swp5       100G   Trunk/L2  SHFFG1826000102        e0b
swp6       100G   Trunk/L2  SHFFG1826000102        e0b
```

1. Change the privilege level back to admin:

   ```
   set -privilege admin
   ```

2. If you suppressed automatic case creation, reenable it by invoking an AutoSupport message:

   ```
   system node autosupport invoke -node * -type all -message MAINT=END
   ```

What's next?

After you've migrated your switches, you can configure switch health monitoring.

Replace a NVIDIA SN2100 storage switch

You can replace a defective NVIDIA SN2100 storage switch. This is a nondisruptive procedure.

Before you begin

Before installing the Cumulus software and RCFs on a NVIDIA SN2100 storage switch, ensure that:

- Your system can support NVIDIA SN2100 storage switches.

- You have downloaded the applicable RCFs.

The Hardware Universe provides full details of supported ports and their configurations.

The existing network configuration must have the following characteristics:

- Complete all troubleshooting steps to confirm you need to replace your switch.
- Ensure management connectivity exists on both switches.

> Make sure that all troubleshooting steps have been completed to confirm that your switch needs replacing.

The replacement NVIDIA SN2100 switch must have the following characteristics:

- Management network connectivity is functional.
- You can access the replacement switch using the console.
- The appropriate RCF and Cumulus operating system image is loaded onto the switch.
- Initial customization of the switch is complete.

Procedure summary

This procedure replaces the second NVIDIA SN2100 storage switch sw2 with the new NVIDIA SN2100 switch nsw2. The two nodes are node1 and node2.

Steps to complete:

- Confirm the switch to be replaced is sw2.
- Disconnect the cables from switch sw2.
- Reconnect the cables to switch nsw2.
- Verify all device configurations on switch nsw2.

Steps

1. If AutoSupport is enabled on this cluster, suppress automatic case creation by invoking an AutoSupport message:

   ```
   system node autosupport invoke -node * -type all - message MAINT=xh
   ```

   x is the duration of the maintenance window in hours.

2. Change the privilege level to advanced, entering **y** when prompted to continue:

   ```
   set -privilege advanced
   ```

3. Check the health status of storage node ports to confirm connection to storage switch S1:

   ```
   storage port show -port-type ENET
   ```

Show example

```
cluster1::*> storage port show -port-type ENET
                                  Speed                       VLAN
Node           Port Type  Mode    (Gb/s) State    Status       ID
-------------- ---- ----- ------- ------ -------- --------- ----
node1
               e3a  ENET  storage 100    enabled  online       30
               e3b  ENET  storage   0    enabled  offline      30
               e7a  ENET  storage   0    enabled  offline      30
               e7b  ENET  storage 100    enabled  online       30
node2
               e3a  ENET  storage 100    enabled  online       30
               e3b  ENET  storage   0    enabled  offline      30
               e7a  ENET  storage   0    enabled  offline      30
               e7b  ENET  storage 100    enabled  online       30
cluster1::*>
```

4. Verify that storage switch sw1 is available:

   `network device-discovery show -protocol lldp`

Show example

```
cluster1::*> network device-discovery show -protocol lldp
Node/       Local  Discovered
Protocol    Port   Device (LLDP: ChassisID)  Interface
Platform
----------- ------ ------------------------- ----------------
----------------
node1/lldp
            e0M    sw1 (00:ea:bd:68:6a:e8)   Eth1/46           -
            e0b    sw2 (6c:b2:ae:5f:a5:b2)   Ethernet1/16      -
            e0c    SHFFG1827000286 (d0:39:ea:1c:16:92)
                                             e0a               -
            e0e    sw3 (6c:b2:ae:5f:a5:ba)   Ethernet1/18      -
            e0f    SHFFG1827000286 (00:a0:98:fd:e4:a9)
                                             e0b               -
            e0g    sw4 (28:ac:9e:d5:4a:9c)   Ethernet1/11      -
            e0h    sw5 (6c:b2:ae:5f:a5:ca)   Ethernet1/22      -
            e1a    sw6 (00:f6:63:10:be:7c)   Ethernet1/33      -
            e1b    sw7 (00:f6:63:10:be:7d)   Ethernet1/34      -
            e2a    sw8 (b8:ce:f6:91:3d:88)   Ethernet1/35      -
Press <space> to page down, <return> for next line, or 'q' to
quit...
10 entries were displayed.
```

5. Run the `net show interface` command on the working switch to confirm that you can see both nodes and all shelves:

   `net show interface`

Show example

```
cumulus@sw1:~$ net show interface

State  Name    Spd   MTU    Mode        LLDP
Summary
-----  ------  ----  -----  ----------  --------------------
--------------------
...
...
UP     swp1    100G  9216   Trunk/L2   node1 (e3a)
Master: bridge(UP)
UP     swp2    100G  9216   Trunk/L2   node2 (e3a)
Master: bridge(UP)
UP     swp3    100G  9216   Trunk/L2   SHFFG1826000112 (e0b)
Master: bridge(UP)
UP     swp4    100G  9216   Trunk/L2   SHFFG1826000112 (e0b)
Master: bridge(UP)
UP     swp5    100G  9216   Trunk/L2   SHFFG1826000102 (e0b)
Master: bridge(UP)
UP     swp6    100G  9216   Trunk/L2   SHFFG1826000102 (e0b)
Master: bridge(UP))
...
...
```

6. Verify the shelf ports in the storage system:

   `storage shelf port show -fields remote-device, remote-port`

Show example

```
cluster1::*> storage shelf port show -fields remote-device, remote-
port
shelf   id  remote-port   remote-device
-----   --  -----------   -------------
3.20    0   swp3          sw1
3.20    1   -             -
3.20    2   swp4          sw1
3.20    3   -             -
3.30    0   swp5          sw1
3.20    1   -             -
3.30    2   swp6          sw1
3.20    3   -             -
cluster1::*>
```

7. Remove all cables attached to storage switch sw2.
8. Reconnect all cables to the replacement switch nsw2.
9. Recheck the health status of the storage node ports:

   `storage port show -port-type ENET`

   Show example

```
cluster1::*> storage port show -port-type ENET
                                  Speed                       VLAN
Node              Port Type  Mode    (Gb/s) State    Status      ID
----------------- ---- ----- ------- ------ -------- --------- ----
node1
                  e3a  ENET  storage 100    enabled  online      30
                  e3b  ENET  storage   0    enabled  offline     30
                  e7a  ENET  storage   0    enabled  offline     30
                  e7b  ENET  storage 100    enabled  online      30
node2
                  e3a  ENET  storage 100    enabled  online      30
                  e3b  ENET  storage   0    enabled  offline     30
                  e7a  ENET  storage   0    enabled  offline     30
                  e7b  ENET  storage 100    enabled  online      30
cluster1::*>
```

10. Verify that both switches are available:

    `net device-discovery show -protocol lldp`

Show example

```
cluster1::*> network device-discovery show -protocol lldp
Node/       Local  Discovered
Protocol    Port   Device (LLDP: ChassisID)  Interface
Platform
----------- ------ ------------------------- ----------------
----------------
node1/lldp
            e0M    sw1 (00:ea:bd:68:6a:e8)   Eth1/46           -
            e0b    sw2 (6c:b2:ae:5f:a5:b2)   Ethernet1/16      -
            e0c    SHFFG1827000286 (d0:39:ea:1c:16:92)
                                             e0a               -
            e0e    sw3 (6c:b2:ae:5f:a5:ba)   Ethernet1/18      -
            e0f    SHFFG1827000286 (00:a0:98:fd:e4:a9)
                                             e0b               -
            e0g    sw4 (28:ac:9e:d5:4a:9c)   Ethernet1/11      -
            e0h    sw5 (6c:b2:ae:5f:a5:ca)   Ethernet1/22      -
            e1a    sw6 (00:f6:63:10:be:7c)   Ethernet1/33      -
            e1b    sw7 (00:f6:63:10:be:7d)   Ethernet1/34      -
            e2a    sw8 (b8:ce:f6:91:3d:88)   Ethernet1/35      -
Press <space> to page down, <return> for next line, or 'q' to
quit...
10 entries were displayed.
```

11. Verify the shelf ports in the storage system:

    `storage shelf port show -fields remote-device, remote-port`

Show example

```
cluster1::*> storage shelf port show -fields remote-device, remote-
port
shelf   id    remote-port     remote-device
-----   --    -----------     -------------
3.20    0     swp3            sw1
3.20    1     swp3            nsw2
3.20    2     swp4            sw1
3.20    3     swp4            nsw2
3.30    0     swp5            sw1
3.20    1     swp5            nsw2
3.30    2     swp6            sw1
3.20    3     swp6            nsw2
cluster1::*>
```

12. Change the privilege level back to admin:

    ```
    set -privilege admin
    ```

13. If you suppressed automatic case creation, re-enable it by invoking an AutoSupport message:

    ```
    system node autosupport invoke -node * -type all -message MAINT=END
    ```

What's next?

After you've replaced your switches, you can configure switch health monitoring.

Shared switches

Cisco Nexus 9336C-FX2

Get started

Installation and setup workflow for Cisco Nexus 9336C-FX2 shared switches

The Cisco Nexus 9336C-FX2 shared switch is part of the Cisco Nexus 9000 platform and can be installed in a NetApp system cabinet. Shared switches allow you to combine cluster and storage functionality into a shared switch configuration, by supporting the use of shared cluster and storage Reference Configuration Files.

Follow these workflow steps to install and setup your to Cisco 9336C-FX2 switches.

Review the configuration requirements

Review the configuration requirements for the 9336C-FX2 shared switch.

Review the components and part numbers

Review the components and part numbers for the 9336C-FX2 shared switch.

Review the required documentation

Review specific switch and controller documentation to set up your 9336C-FX2 switches and the ONTAP cluster.

Configuration requirements for Cisco Nexus 9336C-FX2 shared switches

For Cisco Nexus 9336C-FX2 switch installation and maintenance, be sure to review configuration and network requirements.

ONTAP support

From ONTAP 9.9.1, you can use Cisco Nexus 9336C-FX2 switches to combine storage and cluster functionality into a shared switch configuration.

If you want to build ONTAP clusters with more than two nodes, you need two supported network switches.

Configuration requirements

For configuration, you need the appropriate number and type of cables and cable connectors for your switches.

Depending on the type of switch you are initially configuring, you need to connect to the switch console port with the included console cable; you also need to provide specific network information.

Network requirements

You need the following network information for all switch configurations.

- IP subnet for management network traffic
- Host names and IP addresses for each of the storage system controllers and all applicable switches
- Most storage system controllers are managed through the e0M interface by connecting to the Ethernet service port (wrench icon). On AFF A800 and AFF A700s systems, the e0M interface uses a dedicated Ethernet port.
- Refer to the Hardware Universe for the latest information. See What additional information do I need to install my equipment that is not in HWU? for more information about switch installation requirements.

For more information about the initial configuration of your switch, see the following guide: Cisco Nexus 9336C-FX2 Installation and Upgrade Guide.

What's next

After you've reviewed the configuration requirements, you can confirm your components and part numbers.

Components and part numbers for Cisco Nexus 9336C-FX2 shared switches

For Cisco Nexus 9336C-FX2 switch installation and maintenance, be sure to review the list of components and part numbers.

The following table lists the part number and description for the 9336C-FX2 switch, fans, and power supplies:

Part number	Description
X190200-CS-PE	N9K-9336C-FX2, CS, PTSX, 36PT10/25/40/100GQSFP28
X190200-CS-PI	N9K-9336C-FX2, CS, PSIN, 36PT10/25/40/100GQSFP28
X190002	Accessory Kit X190001/X190003
X-NXA-PAC-1100W-PE2	N9K-9336C AC 1100W PSU - Port side exhaust airflow
X-NXA-PAC-1100W-PI2	N9K-9336C AC 1100W PSU - Port side Intake airflow
X-NXA-FAN-65CFM-PE	N9K-9336C 65CFM, Port side exhaust airflow
X-NXA-FAN-65CFM-PI	N9K-9336C 65CFM, Port side intake airflow

What's next

After you've confirmed your components and part numbers, you can review the required documentation.

Documentation requirements for Cisco Nexus 9336C-FX2 shared switches

For Cisco Nexus 9336C-FX2 switch installation and maintenance, be sure to review specific switch and controller documentation to set up your Cisco 9336-FX2 switches and ONTAP cluster.

To set up the Cisco Nexus 9336C-FX2 shared switches, see the Cisco Nexus 9000 Series Switches Support

page.

Document title	Description
Nexus 9000 Series Hardware Installation Guide	Provides detailed information about site requirements, switch hardware details, and installation options.
Cisco Nexus 9000 Series Switch Software Configuration Guides (choose the guide for the NX-OS release installed on your switches)	Provides initial switch configuration information that you need before you can configure the switch for ONTAP operation.
Cisco Nexus 9000 Series NX-OS Software Upgrade and Downgrade Guide (choose the guide for the NX-OS release installed on your switches)	Provides information on how to downgrade the switch to ONTAP supported switch software, if necessary.
Cisco Nexus 9000 Series NX-OS Command Reference Master Index	Provides links to the various command references provided by Cisco.
Cisco Nexus 9000 MIBs Reference	Describes the Management Information Base (MIB) files for the Nexus 9000 switches.
Nexus 9000 Series NX-OS System Message Reference	Describes the system messages for Cisco Nexus 9000 series switches, those that are informational, and others that might help diagnose problems with links, internal hardware, or the system software.
Cisco Nexus 9000 Series NX-OS Release Notes (choose the notes for the NX-OS release installed on your switches)	Describes the features, bugs, and limitations for the Cisco Nexus 9000 Series.
Regulatory Compliance and Safety Information for Cisco Nexus 9000 Series	Provides international agency compliance, safety, and statutory information for the Nexus 9000 series switches.

Install the hardware

Hardware install workflow for Cisco Nexus 9336C-FX2 shared switches

To install and configure the hardware for a 9336C-FX2 shared switch, follow these steps:

1. **Complete the cabling worksheet**

The sample cabling worksheet provides examples of recommended port assignments from the switches to the controllers. The blank worksheet provides a template that you can use in setting up your cluster.

2. **Install the switch**

Install the 9336C-FX2 switch.

3. **Install the switch in a NetApp cabinet**

Install the 9336C-FX2 switch and pass-through panel in a NetApp cabinet as required.

Complete the Cisco Nexus 9336C-FX2 cabling worksheet

Use the following cabling images to complete the cabling between the controllers and the switches.

Cable NS224 storage as switch-attached

If you want to cable NS224 storage as switch-attached, follow the switch-attached diagram:

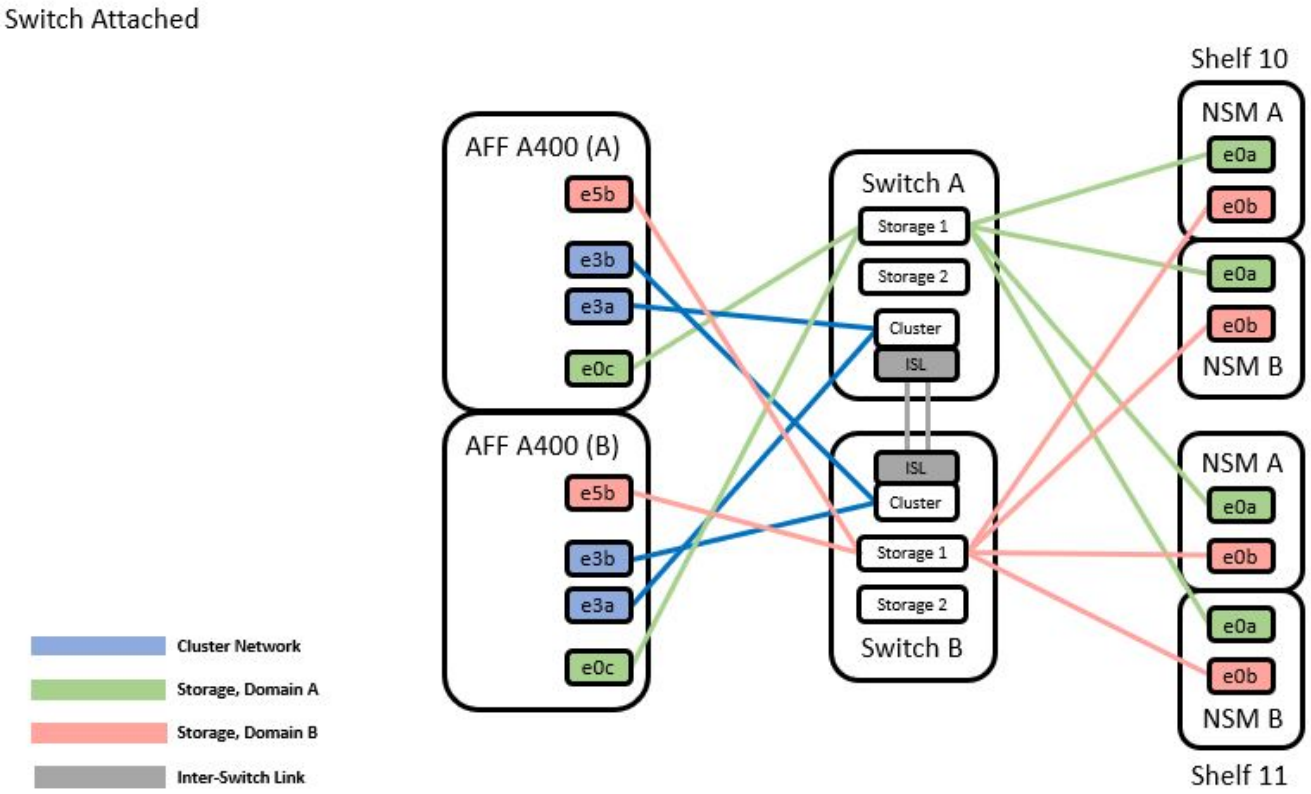

See the Hardware Universe for more information on switch ports. See What additional information do I need to install my equipment that is not in HWU? for more information about switch installation requirements.

Cable NS224 storage as direct-attached

If you want to cable NS224 storage as direct-attached instead of using the shared switch storage ports, follow the direct-attached diagram:

Direct Attached

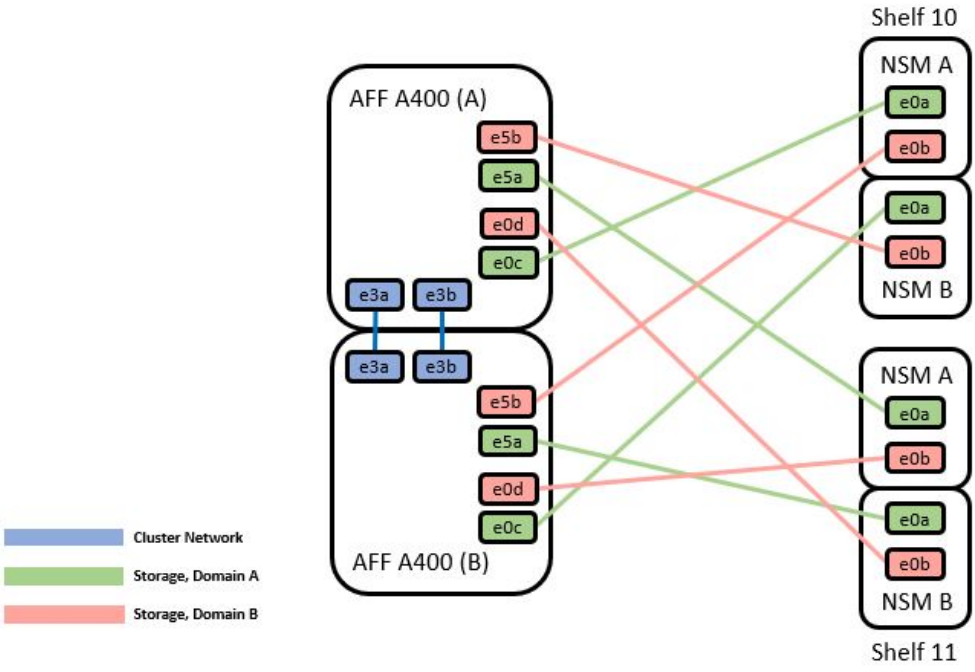

	Port	Node
Path_A	e0c	Node_A
		Node_B
	e5a	Node_A
		Node_B
Path_B	e5b	Node_A
		Node_B
	e0d	Node_A
		Node_B

See the Hardware Universe for more information on switch ports.

Cisco Nexus 9336C-FX2 cabling worksheet

If you want to document the supported platforms, you must complete the blank cabling worksheet by using completed sample cabling worksheet as a guide.

The sample port definition on each pair of switches is as follows:

Switch A			Switch B		
Switch port	Port role	Port usage	Switch port	Port role	Port usage
1	Cluster	40/10GbE	1	Cluster	40/10GbE
2	Cluster	40/10GbE	2	Cluster	40/10GbE
3	Cluster	40/10GbE	3	Cluster	40/10GbE
4	Cluster	40/10GbE	4	Cluster	40/10GbE
5	Cluster	40/10GbE	5	Cluster	40/10GbE
6	Cluster	40/10GbE	6	Cluster	40/10GbE
7	Cluster	40/10GbE	7	Cluster	40/10GbE
8	Cluster	40/10GbE	8	Cluster	40/10GbE
9	Cluster	40GbE w/4x10GbE b/o	9	Cluster	40GbE w/4x10GbE b/o
10	Cluster	100GbE w/4x25GbE b/o	10	Cluster	100GbE w/4x25GbE b/o
11	Storage-1	100GbE	11	Storage-1	100GbE
12	Storage-1	100GbE	12	Storage-1	100GbE
13	Storage-1	100GbE	13	Storage-1	100GbE
14	Storage-1	100GbE	14	Storage-1	100GbE
15	Storage-1	100GbE	15	Storage-1	100GbE
16	Storage-1	100GbE	16	Storage-1	100GbE
17	Storage-1	100GbE	17	Storage-1	100GbE
18	Storage-1	100GbE	18	Storage-1	100GbE
19	Storage-1	100GbE	19	Storage-1	100GbE
20	Storage-1	100GbE	20	Storage-1	100GbE
21	Storage-1	100GbE	21	Storage-1	100GbE
22	Storage-1	100GbE	22	Storage-1	100GbE
23	Storage-2	100GbE	23	Storage-2	100GbE
24	Storage-2	100GbE	24	Storage-2	100GbE
25	Storage-2	100GbE	25	Storage-2	100GbE
26	Storage-2	100GbE	26	Storage-2	100GbE
27	Storage-2	100GbE	27	Storage-2	100GbE
28	Storage-2	100GbE	28	Storage-2	100GbE
29	Storage-2	100GbE	29	Storage-2	100GbE
30	Storage-2	100GbE	30	Storage-2	100GbE
31	Storage-2	100GbE	31	Storage-2	100GbE
32	Storage-2	100GbE	32	Storage-2	100GbE
33	Storage-2	100GbE	33	Storage-2	100GbE
34	Storage-2	100GbE	34	Storage-2	100GbE
35	ISL	100GbE	35	ISL	100GbE
36	ISL	100GbE	36	ISL	100GbE

Where:

- 100G ISL to switch A port 35
- 100G ISL to switch A port 36
- 100G ISL to switch B port 35
- 100G ISL to switch B port 36

Blank cabling worksheet

You can use the blank cabling worksheet to document the platforms that are supported as nodes in a cluster. The Supported Cluster Connections table of the Hardware Universe defines the cluster ports used by the platform.

Switch A			Switch B		
Switch port	Port role	Port usage	Switch port	Port role	Port usage
1			1		
2			2		
3			3		
4			4		
5			5		
6			6		
7			7		
8			8		
9			9		
10			10		
11			11		
12			12		
13			13		
14			14		
15			15		
16			16		
17			17		
18			18		
19			19		
20			20		
21			21		
22			22		
23			23		
24			24		
25			25		
26			26		
27			27		
28			28		
29			29		
30			30		
31			31		
32			32		
33			33		
34			34		
35			35		
36			36		

Where:

- 100G ISL to switch A port 35

- 100G ISL to switch A port 36
- 100G ISL to switch B port 35
- 100G ISL to switch B port 36

What's next

After you've completed your cabling worksheets, you can install the switch.

Install Cisco Nexus 9336C-FX2 shared switches

Follow these instructions to configure Cisco Nexus 9336C-FX2 shared switches.

Before you begin

Make sure you have the following:

- Required shared switch documentation, controller documentation and ONTAP documentation. See Documentation requirements for Cisco Nexus 9336C-FX2 shared switches and NetApp ONTAP documentation.
- Applicable licenses, network and configuration information, and cables.
- Completed cabling worksheets. See Complete the Cisco Nexus 9336C-FX2 cabling worksheet. For more information on cabling, refer to the Hardware Universe.

Steps

1. Rack the switches, controllers and NS224 NVMe storage shelves.

   See the Racking instructions to learn how to rack the switch in a NetApp cabinet.

2. Power on the switches, controllers and NS224 NVMe storage shelves.

What's next?

Optionally, you can install a Cisco Nexus 9336C-FX2 switch in a NetApp cabinet. Otherwise, go to Configure the switch.

Install a Cisco Nexus 9336C-FX2 switch in a NetApp cabinet

Depending on your configuration, you might need to install the Cisco Nexus 9336C-FX2 switch and pass-through panel in a NetApp cabinet. Standard brackets are included with the switch.

Before you begin

Make sure you have the following:

- For each switch, you must supply the eight 10-32 or 12-24 screws and clip nuts to mount the brackets and slider rails to the front and rear cabinet posts.
- You must use the Cisco standard rail kit to install the switch in a NetApp cabinet.

> The jumper cords are not included with the pass-through kit and should be included with your switches. If they were not shipped with the switches, you can order them from NetApp (part number X1558A-R6).

Required documentation

Review the initial preparation requirements, kit contents, and safety precautions in the Cisco Nexus 9000 Series Hardware Installation Guide.

Steps

1. Install the pass-through blanking panel in the NetApp cabinet.

   The pass-through panel kit is available from NetApp (part number X8784-R6).

   The NetApp pass-through panel kit contains the following hardware:

   - One pass-through blanking panel
   - Four 10-32 x .75 screws
   - Four 10-32 clip nuts

     a. Determine the vertical location of the switches and blanking panel in the cabinet.

        In this procedure, the blanking panel will be installed in U40.

     b. Install two clip nuts on each side in the appropriate square holes for front cabinet rails.

     c. Center the panel vertically to prevent intrusion into adjacent rack space, and then tighten the screws.

     d. Insert the female connectors of both 48-inch jumper cords from the rear of the panel and through the brush assembly.

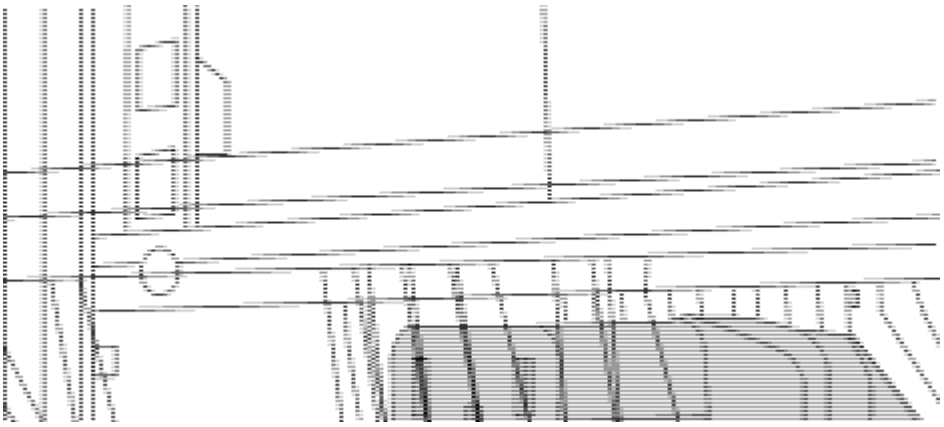

(1) Female connector of the jumper cord.

2. Install the rack-mount brackets on the Nexus 9336C-FX2 switch chassis.

   a. Position a front rack-mount bracket on one side of the switch chassis so that the mounting ear is aligned with the chassis faceplate (on the PSU or fan side), and then use four M4 screws to attach the bracket to the chassis.

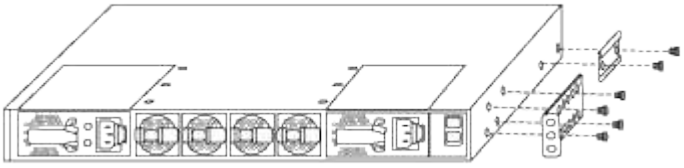

   b. Repeat step 2a with the other front rack-mount bracket on the other side of the switch.

   c. Install the rear rack-mount bracket on the switch chassis.

d. Repeat step 2c with the other rear rack-mount bracket on the other side of the switch.

3. Install the clip nuts in the square hole locations for all four IEA posts.

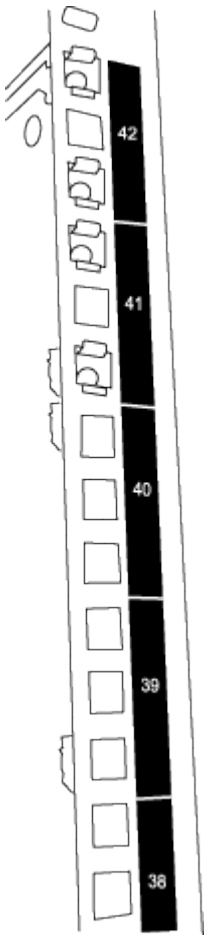

The two 9336C-FX2 switches will always be mounted in the top 2U of the cabinet RU41 and 42.

4. Install the slider rails in the cabinet.

a. Position the first slider rail at the RU42 mark on the back side of the rear left post, insert screws with the matching thread type, and then tighten the screws with your fingers.

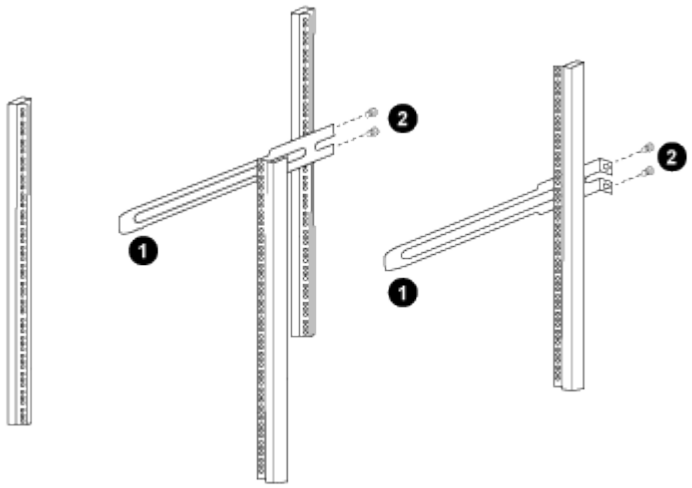

(1) As you gently slide the slider rail, align it to the screw holes in the rack.

(2) Tighten the screws of the slider rails to the cabinet posts.

b. Repeat step 4a for the right side rear post.

c. Repeat steps 4a and 4b at the RU41 locations on the cabinet.

5. Install the switch in the cabinet.

> This step requires two people: one person to support the switch from the front and another to guide the switch into the rear slider rails.

a. Position the back of the switch at RU41.

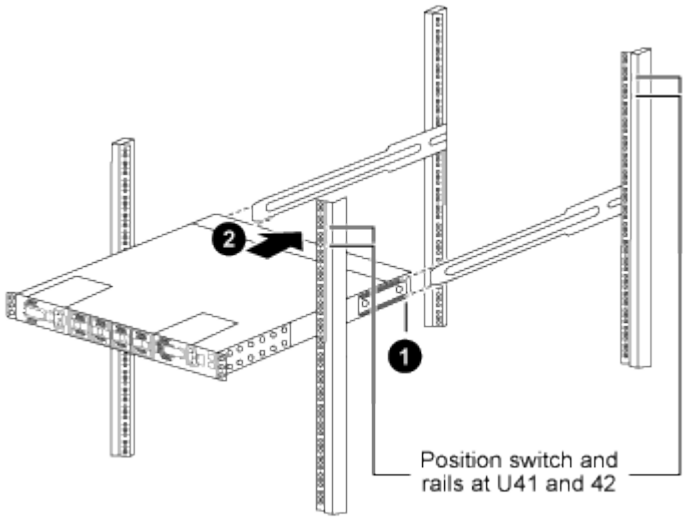

(1) As the chassis is pushed toward the rear posts, align the two rear rack-mount guides with the slider rails.

(2) Gently slide the switch until the front rack-mount brackets are flush with the front posts.

b. Attach the switch to the cabinet.

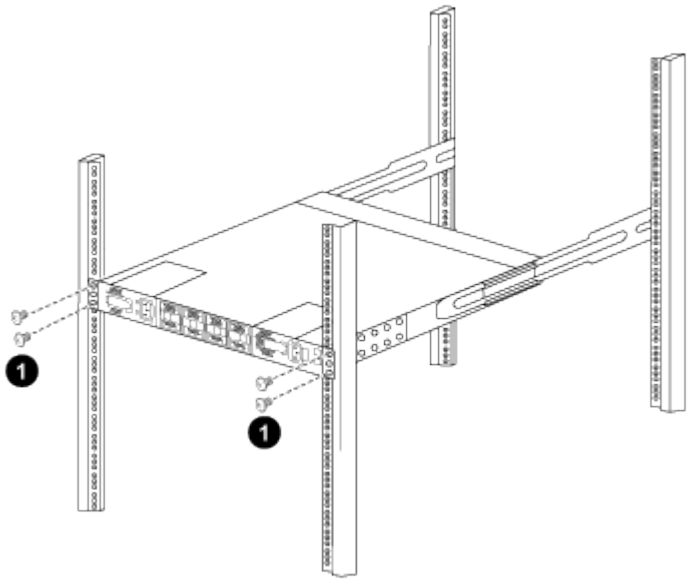

(1) With one person holding the front of the chassis level, the other person should fully tighten the four rear screws to the cabinet posts.

c. With the chassis now supported without assistance, fully tighten the front screws to the posts.

d. Repeat steps 5a through 5c for the second switch at the RU42 location.

> By using the fully installed switch as a support, it is not necessary to hold the front of the second switch during the installation process.

6. When the switches are installed, connect the jumper cords to the switch power inlets.
7. Connect the male plugs of both jumper cords to the closest available PDU outlets.

> To maintain redundancy, the two cords must be connected to different PDUs.

8. Connect the management port on each 9336C-FX2 switch to either of the management switches (if ordered) or connect them directly to your management network.

   The management port is the upper-right port located on the PSU side of the switch. The CAT6 cable for each switch needs to be routed through the pass-through panel after the switches are installed to connect to the management switches or management network.

Configure the software

Software install workflow for Cisco Nexus 9336C-FX2 shared switches

To install and configure software for a Cisco Nexus 9336C-FX2 shared switch, follow these steps:

1. **Configure the switch**

   Configure the 9336C-FX2 shared switch.

2. **Prepare to install the NX-OS software and RCF**

   The Cisco NX-OS software and reference configuration files (RCFs) must be installed on Cisco 9336C-FX2 shared switches.

3. **Install or upgrade the NX-OS software**

   Download and install or upgrade the NX-OS software on the Cisco 9336C-FX2 shared switch.

4. **Install the RCF**

   Install the RCF after setting up the Cisco 9336C-FX2 shared switch for the first time.

5. **Upgrade your RCF**

   Upgrade your RCF version when you have an existing version of the RCF file installed on your operational switches.

6 Reset the switch to factory defaults

Erase the 9336C-FX2 shared switch settings.

Configure Cisco Nexus 9336C-FX2 shared switches

Follow these instructions to configure Cisco Nexus 9336C-FX2 shared switches.

Before you begin

Make sure you have the following:

- Required shared switch documentation, controller documentation and ONTAP documentation. See Documentation requirements for Cisco Nexus 9336C-FX2 shared switches and NetApp ONTAP documentation.
- Applicable licenses, network and configuration information, and cables.
- Completed cabling worksheets. See Complete the Cisco Nexus 9336C-FX2 cabling worksheet. For more information on cabling, refer to the Hardware Universe.

Steps

1. Perform an initial configuration of the switches.

   For configuration, you need the appropriate number and type of cables and cable connectors for your switches.

   Depending on the type of switch you are initially configuring, you need to connect to the switch console port with the included console cable; you also need to provide specific network information.

2. Boot the switch.

   Provide the applicable responses to the following initial setup questions when you first boot the switch.

   Your site's security policy defines the responses and services to enable.

   a. Abort Auto Provisioning and continue with normal setup? (yes/no)

      Respond with **yes**. The default is no.

   b. Do you want to enforce secure password standard? (yes/no)

      Respond with **yes**. The default is yes.

   c. Enter the password for admin.

      The default password is admin; you must create a new, strong password.

      A weak password can be rejected.

   d. Would you like to enter the basic configuration dialog? (yes/no)

      Respond with **yes** at the initial configuration of the switch.

   e. Create another login account? (yes/no)

Your answer depends on your site's policies on alternate administrators. The default is no.

f. Configure read-only SNMP community string? (yes/no)

Respond with **no**. The default is no.

g. Configure read-write SNMP community string? (yes/no)

Respond with **no**. The default is no.

h. Enter the switch name.

The switch name is limited to 63 alphanumeric characters.

i. Continue with out-of-band (mgmt0) management configuration? (yes/no)

Respond with **yes** (the default) at that prompt. At the mgmt0 IPv4 address: prompt, enter your IP address: ip_address

j. Configure the default-gateway? (yes/no)

Respond with **yes**. At the IPv4 address of the default-gateway: prompt, enter your default_gateway.

k. Configure advanced IP options? (yes/no)

Respond with **no**. The default is no.

l. Enable the telnet service? (yes/no)

Respond with **no**. The default is no.

m. Enable SSH service? (yes/no)

Respond with **yes**. The default is yes.

SSH is recommended when using Ethernet Switch Health Monitor (CSHM) for its log collection features. SSHv2 is also recommended for enhanced security.

n. Enter the type of SSH key you want to generate (dsa/rsa/rsa1). The default is rsa.

o. Enter the number of key bits (1024- 2048).

p. Configure the NTP server? (yes/no)

Respond with **no**. The default is no.

q. Configure default interface layer (L3/L2):

Respond with **L2**. The default is L2.

r. Configure default switch port interface state (shut/noshut):

Respond with **noshut**. The default is noshut.

s. Configure CoPP system profile (strict/moderate/lenient/dense):

Respond with **strict**. The default is strict.

t. Would you like to edit the configuration? (yes/no)

   You should see the new configuration at this point. Review and make any necessary changes to the configuration you just entered. Respond with no at the prompt if you are satisfied with the configuration. Respond with **yes** if you want to edit your configuration settings.

u. Use this configuration and save it? (yes/no)

   Respond with **yes** to save the configuration. This automatically updates the kickstart and system images.

3. Verify the configuration choices you made in the display that appears at the end of the setup, and make sure that you save the configuration.

   If you do not save the configuration at this stage, none of the changes will be in effect the next time you reboot the switch.

4. Check the version on the cluster network switches, and if necessary, download the NetApp-supported version of the software to the switches from the Cisco software download page.

What's next?

After you've configured your switches, you can prepare to install NX-OS and RCF.

Prepare to install NX-OS software and RCF

Before you install the NX-OS software and the Reference Configuration File (RCF), follow this procedure.

Suggested documentation

- Cisco Ethernet switch page

  Consult the switch compatibility table for the supported ONTAP and NX-OS versions.

- Software Upgrade and downgrade guides

  Refer to the appropriate software and upgrade guides available on the Cisco website for complete documentation on the Cisco switch upgrade and downgrade procedures.

- Cisco Nexus 9000 and 3000 Upgrade and ISSU Matrix

  Provides information on Disruptive Upgrade/Downgrade for Cisco NX-OS software on Nexus 9000 Series Switches based on your current and target releases.

  On the page, select **Disruptive Upgrade** and select your current release and target release from the dropdown list.

About the examples

The examples in this procedure use the following switch and node nomenclature:

- The names of the two Cisco switches are cs1 and cs2.
- The node names are cluster1-01 and cluster1-02.
- The cluster LIF names are cluster1-01_clus1 and cluster1-01_clus2 for cluster1-01 and cluster1-02_clus1

and cluster1-02_clus2 for cluster1-02.

- The `cluster1::*>` prompt indicates the name of the cluster.

About this task

The procedure requires the use of both ONTAP commands and Cisco Nexus 9000 Series Switches commands; ONTAP commands are used unless otherwise indicated.

Steps

1. If AutoSupport is enabled on this cluster, suppress automatic case creation by invoking an AutoSupport message: `system node autosupport invoke -node * -type all -message MAINT=x h`

   where x is the duration of the maintenance window in hours.

   > The AutoSupport message notifies technical support of this maintenance task so that automatic case creation is suppressed during the maintenance window.

2. Change the privilege level to advanced, entering **y** when prompted to continue:

   ```
   set -privilege advanced
   ```

   The advanced prompt (`*>`) appears.

3. Display how many cluster interconnect interfaces are configured in each node for each cluster interconnect switch:

   ```
   network device-discovery show -protocol cdp
   ```

Show example

```
cluster1::*> network device-discovery show -protocol cdp

Node/       Local  Discovered
Protocol    Port   Device (LLDP: ChassisID)  Interface
Platform
----------- ------ ------------------------- -----------------
--------
cluster1-02/cdp
            e0a    cs1                       Eth1/2            N9K-
C9336C
            e0b    cs2                       Eth1/2            N9K-
C9336C
cluster1-01/cdp
            e0a    cs1                       Eth1/1            N9K-
C9336C
            e0b    cs2                       Eth1/1            N9K-
C9336C

4 entries were displayed.
```

4. Check the administrative or operational status of each cluster interface.
   a. Display the network port attributes:

```
network port show -ipspace Cluster
```

Show example

```
cluster1::*> network port show -ipspace Cluster

Node: cluster1-02
                                                  Speed(Mbps)
Health
Port      IPspace      Broadcast Domain Link MTU  Admin/Oper
Status
--------- ------------ ---------------- ---- ---- -----------
------
e0a       Cluster      Cluster          up   9000  auto/10000
healthy
e0b       Cluster      Cluster          up   9000  auto/10000
healthy

Node: cluster1-01
                                                  Speed(Mbps)
Health
Port      IPspace      Broadcast Domain Link MTU  Admin/Oper
Status
--------- ------------ ---------------- ---- ---- -----------
------
e0a       Cluster      Cluster          up   9000  auto/10000
healthy
e0b       Cluster      Cluster          up   9000  auto/10000
healthy

4 entries were displayed.
```

b. Display information about the LIFs:

```
network interface show -vserver Cluster
```

Show example

```
cluster1::*> network interface show -vserver Cluster

            Logical            Status     Network
Current       Current Is
Vserver     Interface          Admin/Oper Address/Mask       Node
Port    Home
----------- ------------------ ---------- ------------------
------------ ------- ----
Cluster
            cluster1-01_clus1  up/up      169.254.209.69/16
cluster1-01   e0a     true
            cluster1-01_clus2  up/up      169.254.49.125/16
cluster1-01   e0b     true
            cluster1-02_clus1  up/up      169.254.47.194/16
cluster1-02   e0a     true
            cluster1-02_clus2  up/up      169.254.19.183/16
cluster1-02   e0b     true

4 entries were displayed.
```

5. Verify the connectivity of the remote cluster interfaces:

ONTAP 9.9.1 and later

You can use the `network interface check cluster-connectivity` command to start an accessibility check for cluster connectivity and then display the details:

`network interface check cluster-connectivity start` and `network interface check cluster-connectivity show`

```
cluster1::*> network interface check cluster-connectivity start
```

NOTE: Wait for a number of seconds before running the `show` command to display the details.

```
cluster1::*> network interface check cluster-connectivity show
                                  Source               Destination
Packet
Node   Date                       LIF                  LIF
Loss
------ -------------------------- -------------------
------------------ -----------
node1
       3/5/2022 19:21:18 -06:00   cluster1-01_clus2    cluster1-02-
clus1   none
       3/5/2022 19:21:20 -06:00   cluster1-01_clus2    cluster1-
02_clus2   none
node2
       3/5/2022 19:21:18 -06:00   cluster1-02_clus2    cluster1-
01_clus1   none
       3/5/2022 19:21:20 -06:00   cluster1-02_clus2    cluster1-
01_clus2   none
```

All ONTAP releases

For all ONTAP releases, you can also use the `cluster ping-cluster -node <name>` command to check the connectivity:

```
cluster ping-cluster -node <name>
```

```
cluster1::*> cluster ping-cluster -node local
Host is cluster1-02
Getting addresses from network interface table...
Cluster cluster1-01_clus1 169.254.209.69 cluster1-01     e0a
Cluster cluster1-01_clus2 169.254.49.125 cluster1-01     e0b
Cluster cluster1-02_clus1 169.254.47.194 cluster1-02     e0a
Cluster cluster1-02_clus2 169.254.19.183 cluster1-02     e0b
Local = 169.254.47.194 169.254.19.183
Remote = 169.254.209.69 169.254.49.125
Cluster Vserver Id = 4294967293
Ping status:

Basic connectivity succeeds on 4 path(s)
Basic connectivity fails on 0 path(s)

Detected 9000 byte MTU on 4 path(s):
    Local 169.254.19.183 to Remote 169.254.209.69
    Local 169.254.19.183 to Remote 169.254.49.125
    Local 169.254.47.194 to Remote 169.254.209.69
    Local 169.254.47.194 to Remote 169.254.49.125
Larger than PMTU communication succeeds on 4 path(s)
RPC status:
2 paths up, 0 paths down (tcp check)
2 paths up, 0 paths down (udp check)
```

6. Verify that the auto-revert command is enabled on all cluster LIFs:

```
network interface show -vserver Cluster -fields auto-revert
```

Show example

```
cluster1::*> network interface show -vserver Cluster -fields auto-
revert

          Logical
Vserver   Interface           Auto-revert
--------- ------------------- ------------
Cluster
          cluster1-01_clus1   true
          cluster1-01_clus2   true
          cluster1-02_clus1   true
          cluster1-02_clus2   true
4 entries were displayed.
```

What's next?

After you've prepared to install the NX-OS software and RCF, you can install the NX-OS software.

Install the NX-OS software

Follow this procedure to install the NX-OS software on the Nexus 9336C-FX2 shared switch.

Before you begin, complete the procedure in Prepare to install NX-OS and RCF.

Review requirements

Before you begin

Make sure you do the following:

- Run the `show install all impact nxos bootflash:<image_name>.bin` command on the switch to review the impact of installing or upgrading the new NX-OS software image. It verifies the image integrity, checks for necessary reboots, evaluates hardware compatibility, and confirms sufficient space.
- Review the release notes for the target NX-OS software version to check for any specific requirements.
- Verify that you have a current backup of the switch configuration.
- Verify that you have a fully functioning cluster (no errors in the logs or similar issues).

Suggested documentation

- Cisco Ethernet switch page

  Consult the switch compatibility table for the supported ONTAP and NX-OS versions.

- Software Upgrade and downgrade guides

  Refer to the appropriate software and upgrade guides available on the Cisco website for complete documentation on the Cisco switch upgrade and downgrade procedures.

- Cisco Nexus 9000 and 3000 Upgrade and ISSU Matrix

  Provides information on Disruptive Upgrade/Downgrade for Cisco NX-OS software on Nexus 9000 Series Switches
  based on your current and target releases.

  On the page, select **Disruptive Upgrade** and select your current release and target release from the dropdown list.

About the examples

The examples in this procedure use the following switch and node nomenclature:

- The names of the two Cisco switches are cs1 and cs2.
- The node names are cluster1-01, cluster1-02, cluster1-03, and cluster1-04.
- The cluster LIF names are cluster1-01_clus1, cluster1-01_clus2, cluster1-02_clus1, cluster1-02_clus2 , cluster1-03_clus1, cluster1-03_clus2, cluster1-04_clus1, and cluster1-04_clus2.
- The `cluster1::*>` prompt indicates the name of the cluster.

Install the software

The procedure requires the use of both ONTAP commands and Cisco Nexus 9000 Series Switches commands; ONTAP commands are used unless otherwise indicated.

Steps

1. Connect the cluster switch to the management network.
2. Use the ping command to verify connectivity to the server hosting the NX-OS software and the RCF.

   Show example

   This example verifies that the switch can reach the server at IP address 172.19.2.1:

   ```
   cs2# ping 172.19.2.1 VRF management
   Pinging 172.19.2.1 with 0 bytes of data:

   Reply From 172.19.2.1: icmp_seq = 0. time= 5910 usec.
   ```

3. Display the cluster ports on each node that are connected to the cluster switches:

   ```
   network device-discovery show
   ```

Show example

```
cluster1::*> network device-discovery show
Node/       Local  Discovered
Protocol    Port   Device (LLDP: ChassisID)  Interface
Platform
----------- ------ ------------------------- ----------------
--------------
cluster1-01/cdp
            e0a    cs1                       Ethernet1/7       N9K-
C9336C-FX2
            e0b    cs2                       Ethernet1/7       N9K-
C9336C-FX2
cluster1-02/cdp
            e0a    cs1                       Ethernet1/8       N9K-
C9336C-FX2
            e0b    cs2                       Ethernet1/8       N9K-
C9336C-FX2
cluster1-03/cdp
            e0a    cs1                       Ethernet1/1/1     N9K-
C9336C-FX2
            e0b    cs2                       Ethernet1/1/1     N9K-
C9336C-FX2
cluster1-04/cdp
            e0a    cs1                       Ethernet1/1/2     N9K-
C9336C-FX2
            e0b    cs2                       Ethernet1/1/2     N9K-
C9336C-FX2
cluster1::*>
```

4. Check the administrative and operational status of each cluster port.
   a. Verify that all the cluster ports are **up** with a healthy status:

      ```
      network port show -ipspace Cluster
      ```

Show example

```
cluster1::*> network port show -ipspace Cluster

Node: cluster1-01

Ignore
                                                  Speed(Mbps)
Health   Health
Port      IPspace      Broadcast Domain Link MTU  Admin/Oper
Status   Status
--------- ------------ ---------------- ---- ---- -----------
-------- ------
e0a       Cluster      Cluster          up   9000  auto/100000
healthy false
e0b       Cluster      Cluster          up   9000  auto/100000
healthy false

Node: cluster1-02

Ignore
                                                  Speed(Mbps)
Health   Health
Port      IPspace      Broadcast Domain Link MTU  Admin/Oper
Status   Status
--------- ------------ ---------------- ---- ---- -----------
-------- ------
e0a       Cluster      Cluster          up   9000  auto/100000
healthy false
e0b       Cluster      Cluster          up   9000  auto/100000
healthy false
8 entries were displayed.

Node: cluster1-03

   Ignore
                                                  Speed(Mbps)
Health   Health
Port      IPspace      Broadcast Domain Link MTU  Admin/Oper
Status   Status
--------- ------------ ---------------- ---- ---- -----------
-------- ------
e0a       Cluster      Cluster          up   9000  auto/10000
healthy  false
e0b       Cluster      Cluster          up   9000  auto/10000
healthy  false
```

```
Node: cluster1-04

Ignore
                                                          Speed(Mbps)
Health   Health
Port      IPspace      Broadcast Domain Link MTU  Admin/Oper
Status   Status
--------- ------------ ---------------- ---- ---- -----------
-------- ------
e0a       Cluster      Cluster          up   9000  auto/10000
healthy  false
e0b       Cluster      Cluster          up   9000  auto/10000
healthy  false
cluster1::*>
```

b. Verify that all the cluster interfaces (LIFs) are on the home port:

```
network interface show -vserver Cluster
```

Show example

```
cluster1::*> network interface show -vserver Cluster
            Logical            Status     Network
Current      Current Is
Vserver     Interface          Admin/Oper Address/Mask      Node
Port    Home
----------- ------------------ ---------- -----------------
------------ ------- ----
Cluster
            cluster1-01_clus1  up/up     169.254.3.4/23
cluster1-01  e0a     true
            cluster1-01_clus2  up/up     169.254.3.5/23
cluster1-01  e0b     true
            cluster1-02_clus1  up/up     169.254.3.8/23
cluster1-02  e0a     true
            cluster1-02_clus2  up/up     169.254.3.9/23
cluster1-02  e0b     true
            cluster1-03_clus1  up/up     169.254.1.3/23
cluster1-03  e0a     true
            cluster1-03_clus2  up/up     169.254.1.1/23
cluster1-03  e0b     true
            cluster1-04_clus1  up/up     169.254.1.6/23
cluster1-04  e0a     true
            cluster1-04_clus2  up/up     169.254.1.7/23
cluster1-04  e0b     true
8 entries were displayed.
cluster1::*>
```

c. Verify that the cluster displays information for both cluster switches:

`system cluster-switch show -is-monitoring-enabled-operational true`

Show example

```
cluster1::*> system cluster-switch show -is-monitoring-enabled
-operational true
Switch                      Type               Address
Model
--------------------------- ------------------ ----------------
--------------
cs1                         cluster-network    10.233.205.90
N9K-C9336C-FX2
     Serial Number: FOCXXXXXXGD
      Is Monitored: true
            Reason: None
  Software Version: Cisco Nexus Operating System (NX-OS)
Software, Version
                    9.3(5)
    Version Source: CDP

cs2                         cluster-network    10.233.205.91
N9K-C9336C-FX2
     Serial Number: FOCXXXXXXGS
      Is Monitored: true
            Reason: None
  Software Version: Cisco Nexus Operating System (NX-OS)
Software, Version
                    9.3(5)
    Version Source: CDP
cluster1::*>
```

5. Disable auto-revert on the cluster LIFs. The cluster LIFs fail over to the partner cluster switch and remain there as you perform the upgrade procedure on the targeted switch:

   ```
   network interface modify -vserver Cluster -lif * -auto-revert false
   ```

6. Copy the NX-OS software and EPLD images to the Nexus 9336C-FX2 switch.

Show example

```
cs2# copy sftp: bootflash: vrf management
Enter source filename: /code/nxos.9.3.5.bin
Enter hostname for the sftp server: 172.19.2.1
Enter username: user1

Outbound-ReKey for 172.19.2.1:22
Inbound-ReKey for 172.19.2.1:22
user1@172.19.2.1's password:
sftp> progress
Progress meter enabled
sftp> get   /code/nxos.9.3.5.bin  /bootflash/nxos.9.3.5.bin
/code/nxos.9.3.5.bin  100% 1261MB   9.3MB/s   02:15
sftp> exit
Copy complete, now saving to disk (please wait)...
Copy complete.


cs2# copy sftp: bootflash: vrf management
Enter source filename: /code/n9000-epld.9.3.5.img
Enter hostname for the sftp server: 172.19.2.1
Enter username: user1

Outbound-ReKey for 172.19.2.1:22
Inbound-ReKey for 172.19.2.1:22
user1@172.19.2.1's password:
sftp> progress
Progress meter enabled
sftp> get   /code/n9000-epld.9.3.5.img  /bootflash/n9000-
epld.9.3.5.img
/code/n9000-epld.9.3.5.img  100%  161MB   9.5MB/s   00:16
sftp> exit
Copy complete, now saving to disk (please wait)...
Copy complete.
```

7. Verify the running version of the NX-OS software:

   ```
   show version
   ```

Show example

```
cs2# show version
Cisco Nexus Operating System (NX-OS) Software
TAC support: http://www.cisco.com/tac
Copyright (C) 2002-2020, Cisco and/or its affiliates.
All rights reserved.
The copyrights to certain works contained in this software are
owned by other third parties and used and distributed under their
own
licenses, such as open source.  This software is provided "as is,"
and unless
otherwise stated, there is no warranty, express or implied,
including but not
limited to warranties of merchantability and fitness for a
particular purpose.
Certain components of this software are licensed under
the GNU General Public License (GPL) version 2.0 or
GNU General Public License (GPL) version 3.0  or the GNU
Lesser General Public License (LGPL) Version 2.1 or
Lesser General Public License (LGPL) Version 2.0.
A copy of each such license is available at
http://www.opensource.org/licenses/gpl-2.0.php and
http://opensource.org/licenses/gpl-3.0.html and
http://www.opensource.org/licenses/lgpl-2.1.php and
http://www.gnu.org/licenses/old-licenses/library.txt.

Software
  BIOS: version 08.38
  NXOS: version 9.3(4)
  BIOS compile time:  05/29/2020
  NXOS image file is: bootflash:///nxos.9.3.4.bin
  NXOS compile time:  4/28/2020 21:00:00 [04/29/2020 02:28:31]


Hardware
  cisco Nexus9000 C9336C-FX2 Chassis
  Intel(R) Xeon(R) CPU E5-2403 v2 @ 1.80GHz with 8154432 kB of
memory.
  Processor Board ID FOC20291J6K

  Device name: cs2
  bootflash:   53298520 kB
Kernel uptime is 0 day(s), 0 hour(s), 3 minute(s), 42 second(s)
```

```
Last reset at 157524 usecs after Mon Nov  2 18:32:06 2020
  Reason: Reset Requested by CLI command reload
  System version: 9.3(4)
  Service:

plugin
  Core Plugin, Ethernet Plugin

Active Package(s):


cs2#
```

8. Install the NX-OS image.

   Installing the image file causes it to be loaded every time the switch is rebooted.

Show example

```
cs2# install all nxos bootflash:nxos.9.3.5.bin

Installer will perform compatibility check first. Please wait.
Installer is forced disruptive

Verifying image bootflash:/nxos.9.3.5.bin for boot variable "nxos".
[] 100% -- SUCCESS

Verifying image type.
[] 100% -- SUCCESS

Preparing "nxos" version info using image bootflash:/nxos.9.3.5.bin.
[] 100% -- SUCCESS

Preparing "bios" version info using image bootflash:/nxos.9.3.5.bin.
[] 100% -- SUCCESS

Performing module support checks.
[] 100% -- SUCCESS

Notifying services about system upgrade.
[] 100% -- SUCCESS



Compatibility check is done:
Module  Bootable  Impact          Install-type  Reason
------  --------  --------------- ------------  ---------
  1     yes       Disruptive      Reset         Default upgrade is
not hitless



Images will be upgraded according to following table:

Module   Image    Running-Version(pri:alt)                New-
Version         Upg-Required
-------  -------- ----------------------------------------
-------------------- ------------
  1      nxos     9.3(4)                                  9.3(5)
yes
  1      bios     v08.37(01/28/2020):v08.23(09/23/2015)
v08.38(05/29/2020)      yes
```

```
Switch will be reloaded for disruptive upgrade.

Do you want to continue with the installation (y/n)? [n] y

Install is in progress, please wait.

Performing runtime checks.
[] 100% -- SUCCESS

Setting boot variables.
[] 100% -- SUCCESS

Performing configuration copy.
[] 100% -- SUCCESS

Module 1: Refreshing compact flash and upgrading
bios/loader/bootrom.
Warning: please do not remove or power off the module at this time.
[] 100% -- SUCCESS

Finishing the upgrade, switch will reboot in 10 seconds.
```

9. Verify the new version of NX-OS software after the switch has rebooted:

   ```
   show version
   ```

Show example

```
cs2# show version

Cisco Nexus Operating System (NX-OS) Software
TAC support: http://www.cisco.com/tac
Copyright (C) 2002-2020, Cisco and/or its affiliates.
All rights reserved.
The copyrights to certain works contained in this software are
owned by other third parties and used and distributed under their
own
licenses, such as open source.  This software is provided "as is,"
and unless
otherwise stated, there is no warranty, express or implied,
including but not
limited to warranties of merchantability and fitness for a
particular purpose.
Certain components of this software are licensed under
the GNU General Public License (GPL) version 2.0 or
GNU General Public License (GPL) version 3.0  or the GNU
Lesser General Public License (LGPL) Version 2.1 or
Lesser General Public License (LGPL) Version 2.0.
A copy of each such license is available at
http://www.opensource.org/licenses/gpl-2.0.php and
http://opensource.org/licenses/gpl-3.0.html and
http://www.opensource.org/licenses/lgpl-2.1.php and
http://www.gnu.org/licenses/old-licenses/library.txt.

Software
  BIOS: version 05.33
  NXOS: version 9.3(5)
  BIOS compile time:  09/08/2018
  NXOS image file is: bootflash:///nxos.9.3.5.bin
  NXOS compile time:  11/4/2018 21:00:00 [11/05/2018 06:11:06]


Hardware
  cisco Nexus9000 C9336C-FX2 Chassis
  Intel(R) Xeon(R) CPU E5-2403 v2 @ 1.80GHz with 8154432 kB of
memory.
  Processor Board ID FOC20291J6K

  Device name: cs2
  bootflash:   53298520 kB
Kernel uptime is 0 day(s), 0 hour(s), 3 minute(s), 42 second(s)
```

```
Last reset at 277524 usecs after Mon Nov  2 22:45:12 2020
  Reason: Reset due to upgrade
  System version: 9.3(4)
  Service:

plugin
  Core Plugin, Ethernet Plugin

Active Package(s):
```

10. Upgrade the EPLD image and reboot the switch.

Show example

```
cs2# show version module 1 epld

EPLD Device                          Version
---------------------------------------
MI   FPGA                             0x7
IO   FPGA                             0x17
MI   FPGA2                            0x2
GEM  FPGA                             0x2
GEM  FPGA                             0x2
GEM  FPGA                             0x2
GEM  FPGA                             0x2

cs2# install epld bootflash:n9000-epld.9.3.5.img module all
Compatibility check:
Module        Type         Upgradable        Impact    Reason
------  ------------------ ----------------- --------- -----------
     1         SUP         Yes       disruptive  Module Upgradable

Retrieving EPLD versions.... Please wait.
Images will be upgraded according to following table:
Module  Type   EPLD              Running-Version   New-Version  Upg-
Required
------- ------ ----------------- ----------------- ------------
------------
     1  SUP    MI FPGA           0x07              0x07         No
     1  SUP    IO FPGA           0x17              0x19         Yes
     1  SUP    MI FPGA2          0x02              0x02         No
The above modules require upgrade.
The switch will be reloaded at the end of the upgrade
Do you want to continue (y/n) ?  [n] y

Proceeding to upgrade Modules.

Starting Module 1 EPLD Upgrade

Module 1 : IO FPGA [Programming] : 100.00% (     64 of      64
sectors)
Module 1 EPLD upgrade is successful.
Module   Type  Upgrade-Result
-------- ----- --------------
     1   SUP   Success

EPLDs upgraded.

Module 1 EPLD upgrade is successful.
```

11. After the switch reboot, log in again and verify that the new version of EPLD loaded successfully.

Show example

```
cs2# show version module 1 epld

EPLD Device                          Version
--------------------------------------
MI   FPGA                             0x7
IO   FPGA                             0x19
MI   FPGA2                            0x2
GEM  FPGA                             0x2
GEM  FPGA                             0x2
GEM  FPGA                             0x2
GEM  FPGA                             0x2
```

12. Verify the health of cluster ports on the cluster.
    a. Verify that cluster ports are up and healthy across all nodes in the cluster:

    ```
    network port show -ipspace Cluster
    ```

Show example

```
cluster1::*> network port show -ipspace Cluster

Node: cluster1-01

Ignore
                                                  Speed(Mbps)
Health   Health
Port      IPspace      Broadcast Domain Link MTU  Admin/Oper
Status   Status
--------- ------------ ---------------- ---- ---- -----------
-------- ------
e0a       Cluster      Cluster          up   9000  auto/10000
healthy  false
e0b       Cluster      Cluster          up   9000  auto/10000
healthy  false

Node: cluster1-02

Ignore
                                                  Speed(Mbps)
Health   Health
Port      IPspace      Broadcast Domain Link MTU  Admin/Oper
Status   Status
--------- ------------ ---------------- ---- ---- -----------
-------- ------
e0a       Cluster      Cluster          up   9000  auto/10000
healthy  false
e0b       Cluster      Cluster          up   9000  auto/10000
healthy  false

Node: cluster1-03

Ignore
                                                  Speed(Mbps)
Health   Health
Port      IPspace      Broadcast Domain Link MTU  Admin/Oper
Status   Status
--------- ------------ ---------------- ---- ---- -----------
-------- ------
e0a       Cluster      Cluster          up   9000  auto/100000
healthy false
e0b       Cluster      Cluster          up   9000  auto/100000
healthy false
```

```
Node: cluster1-04

Ignore
                                                          Speed(Mbps)
Health   Health
Port      IPspace      Broadcast Domain Link MTU  Admin/Oper
Status   Status
--------- ------------ ---------------- ---- ---- -----------
-------- ------
e0a       Cluster      Cluster          up   9000  auto/100000
healthy false
e0b       Cluster      Cluster          up   9000  auto/100000
healthy false
8 entries were displayed.
```

b. Verify the switch health from the cluster.

```
network device-discovery show -protocol cdp
```

Show example

```
cluster1::*> network device-discovery show -protocol cdp
Node/       Local  Discovered
Protocol    Port   Device (LLDP: ChassisID)  Interface
Platform
----------- ------ ------------------------- -----------------
--------------
cluster1-01/cdp
            e0a    cs1                       Ethernet1/7
N9K-C9336C-FX2
            e0b    cs2                       Ethernet1/7
N9K-C9336C-FX2
cluster01-2/cdp
            e0a    cs1                       Ethernet1/8
N9K-C9336C-FX2
            e0b    cs2                       Ethernet1/8
N9K-C9336C-FX2
cluster01-3/cdp
            e0a    cs1                       Ethernet1/1/1
N9K-C9336C-FX2
            e0b    cs2                       Ethernet1/1/1
N9K-C9336C-FX2
cluster1-04/cdp
            e0a    cs1                       Ethernet1/1/2
N9K-C9336C-FX2
            e0b    cs2                       Ethernet1/1/2
N9K-C9336C-FX2

cluster1::*> system cluster-switch show -is-monitoring-enabled
-operational true
Switch                      Type               Address
Model
--------------------------- ------------------ ----------------
--------------
cs1                         cluster-network    10.233.205.90
N9K-C9336C-FX2
     Serial Number: FOCXXXXXXGD
      Is Monitored: true
            Reason: None
  Software Version: Cisco Nexus Operating System (NX-OS)
Software, Version
                    9.3(5)
    Version Source: CDP

cs2                         cluster-network    10.233.205.91
```

```
N9K-C9336C-FX2
     Serial Number: FOCXXXXXXGS
      Is Monitored: true
            Reason: None
  Software Version: Cisco Nexus Operating System (NX-OS)
Software, Version
                    9.3(5)
    Version Source: CDP

2 entries were displayed.
```

You might observe the following output on the cs1 switch console depending on the RCF version previously loaded on the switch:

```
2020 Nov 17 16:07:18 cs1 %$ VDC-1 %$ %STP-2-UNBLOCK_CONSIST_PORT:
Unblocking port port-channel1 on VLAN0092. Port consistency
restored.
2020 Nov 17 16:07:23 cs1 %$ VDC-1 %$ %STP-2-BLOCK_PVID_PEER:
Blocking port-channel1 on VLAN0001. Inconsistent peer vlan.
2020 Nov 17 16:07:23 cs1 %$ VDC-1 %$ %STP-2-BLOCK_PVID_LOCAL:
Blocking port-channel1 on VLAN0092. Inconsistent local vlan.
```

13. Verify that the cluster is healthy:

    `cluster show`

    Show example

    ```
    cluster1::*> cluster show
    Node                 Health   Eligibility   Epsilon
    -------------------- -------- ------------- -------
    cluster1-01          true     true          false
    cluster1-02          true     true          false
    cluster1-03          true     true          true
    cluster1-04          true     true          false
    4 entries were displayed.
    cluster1::*>
    ```

14. Repeat steps 6 to 13 to install the NX-OS software on switch cs1.
15. Verify the connectivity of the remote cluster interfaces before enabling auto-revert on the cluster LIFs:

ONTAP 9.9.1 and later

You can use the `network interface check cluster-connectivity` command to start an accessibility check for cluster connectivity and then display the details:

`network interface check cluster-connectivity start` and `network interface check cluster-connectivity show`

```
cluster1::*> network interface check cluster-connectivity start
```

NOTE: Wait for a number of seconds before running the `show` command to display the details.

```
cluster1::*> network interface check cluster-connectivity show
                                  Source               Destination
Packet
Node   Date                       LIF                  LIF
Loss
------ -------------------------- -------------------
------------------ -----------
cluster1-01
       3/5/2022 19:21:18 -06:00   cluster1-01_clus2    cluster1-02-
clus1   none
       3/5/2022 19:21:20 -06:00   cluster1-01_clus2    cluster1-
02_clus2   none
cluster1-02
       3/5/2022 19:21:18 -06:00   cluster1-02_clus2    cluster1-
01_clus1   none
       3/5/2022 19:21:20 -06:00   cluster1-02_clus2    cluster1-
01_clus2   none
```

All ONTAP releases

For all ONTAP releases, you can also use the `cluster ping-cluster -node <name>` command to check the connectivity:

```
cluster ping-cluster -node <name>
```

```
cluster1::*> cluster ping-cluster -node local
Host is cluster1-02
Getting addresses from network interface table...
Cluster cluster1-01_clus1 169.254.209.69 cluster1-01     e0a
Cluster cluster1-01_clus2 169.254.49.125 cluster1-01     e0b
Cluster cluster1-02_clus1 169.254.47.194 cluster1-02     e0a
Cluster cluster1-02_clus2 169.254.19.183 cluster1-02     e0b
Local = 169.254.47.194 169.254.19.183
Remote = 169.254.209.69 169.254.49.125
Cluster Vserver Id = 4294967293
Ping status:

Basic connectivity succeeds on 4 path(s)
Basic connectivity fails on 0 path(s)

Detected 9000 byte MTU on 4 path(s):
    Local 169.254.19.183 to Remote 169.254.209.69
    Local 169.254.19.183 to Remote 169.254.49.125
    Local 169.254.47.194 to Remote 169.254.209.69
    Local 169.254.47.194 to Remote 169.254.49.125
Larger than PMTU communication succeeds on 4 path(s)
RPC status:
2 paths up, 0 paths down (tcp check)
2 paths up, 0 paths down (udp check)
```

16. Enable auto-revert on the cluster LIFs.

    network interface modify -vserver Cluster -lif * -auto-revert true

17. Verify that the cluster LIFs have reverted to their home port:

    network interface show -vserver Cluster

Show example

```
cluster1::*> network interface show -vserver Cluster
            Logical             Status     Network             Current
Current Is
Vserver     Interface           Admin/Oper Address/Mask        Node
Port    Home
----------- ------------------ ---------- ------------------
------------------- ------- ----
Cluster
            cluster1-01_clus1  up/up      169.254.3.4/23
cluster1-01         e0b     true
            cluster1-01_clus2  up/up      169.254.3.5/23
cluster1-01         e0b     true
            cluster1-02_clus1  up/up      169.254.3.8/23
cluster1-02         e0b     true
            cluster1-02_clus2  up/up      169.254.3.9/23
cluster1-02         e0b     true
            cluster1-03_clus1  up/up      169.254.1.3/23
cluster1-03         e0b     true
            cluster1-03_clus2  up/up      169.254.1.1/23
cluster1-03         e0b     true
            cluster1-04_clus1  up/up      169.254.1.6/23
cluster1-04         e0b     true
            cluster1-04_clus2  up/up      169.254.1.7/23
cluster1-04         e0b     true
8 entries were displayed.
cluster1::*>
```

If any cluster LIFs have not returned to their home ports, revert them manually from the local node:

```
network interface revert -vserver Cluster -lif <lif_name>
```

What's next?

After you've installed the NX-OS software, you can install the RCF.

Install the Reference Configuration File (RCF)

You can install the reference configuration file (RCF) after setting up the Nexus 9336C-FX2 switch for the first time.

Before you begin, complete the procedure in Prepare to install NX-OS and RCF.

Before you begin

Verify the following installations and connections:

- A console connection to the switch. The console connection is optional if you have remote access to the switch.
- Switch cs1 and switch cs2 are powered up and the initial switch setup is complete (the Management IP address and SSH is set up).
- The desired NX-OS version has been installed.
- Inter-switch link (ISL) connections between switches are connected.
- ONTAP node cluster ports are not connected.

Available RCF configuration

- **ClusterStorageRCF** - Supports a partitioned cluster plus two storage zones on the switches (Cluster-Storage RCF 1.*xx*).

Step 1: Install the RCF on the switches

1. Login to switch cs1 using SSH or by using a serial console.
2. Copy the RCF to the bootflash of switch cs1 using one of the following transfer protocols: FTP, TFTP, SFTP, or SCP.

   For more information on Cisco commands, see the appropriate guide in the Cisco Nexus 9000 Series NX-OS Command Reference.

   Show example

   This example shows TFTP being used to copy an RCF to the bootflash on switch cs1:

   ```
   cs1# copy tftp: bootflash: vrf management
   Enter source filename: Nexus_9336C_RCF_v1.6-Cluster-HA-Breakout.txt
   Enter hostname for the tftp server: 172.22.201.50
   Trying to connect to tftp server......Connection to Server
   Established.
   TFTP get operation was successful
   Copy complete, now saving to disk (please wait)...
   ```

3. Apply the RCF previously downloaded to the bootflash.

   For more information on Cisco commands, see the appropriate guide in the Cisco Nexus 9000 Series NX-OS Command Reference.

   Show example

   This example shows the RCF file `Nexus_9336C_RCF_v1.6-Cluster-HA-Breakout.txt` being installed on switch cs1:

   ```
   cs1# copy Nexus_9336C_RCF_v1.6-Cluster-HA-Breakout.txt running-
   config echo-commands
   ```

4. Examine the banner output from the `show banner motd` command. You must read and follow these instructions to ensure the proper configuration and operation of the switch.

Show example

```
cs1# show banner motd

**********************************************************************
**********
* NetApp Reference Configuration File (RCF)
*
* Switch   : Nexus N9K-C9336C-FX2
* Filename : Nexus_9336C_RCF_v1.6-Cluster-HA-Breakout.txt
* Date     : 10-23-2020
* Version  : v1.6
*
* Port Usage:
* Ports  1- 3: Breakout mode (4x10G) Intra-Cluster Ports, int
e1/1/1-4, e1/2/1-4
, e1/3/1-4
* Ports  4- 6: Breakout mode (4x25G) Intra-Cluster/HA Ports, int
e1/4/1-4, e1/5/
1-4, e1/6/1-4
* Ports  7-34: 40/100GbE Intra-Cluster/HA Ports, int e1/7-34
* Ports 35-36: Intra-Cluster ISL Ports, int e1/35-36
*
* Dynamic breakout commands:
* 10G: interface breakout module 1 port <range> map 10g-4x
* 25G: interface breakout module 1 port <range> map 25g-4x
*
* Undo breakout commands and return interfaces to 40/100G
configuration in confi
g mode:
* no interface breakout module 1 port <range> map 10g-4x
* no interface breakout module 1 port <range> map 25g-4x
* interface Ethernet <interfaces taken out of breakout mode>
* inherit port-profile 40-100G
* priority-flow-control mode auto
* service-policy input HA
* exit
*
**********************************************************************
**********
```

5. Verify that the RCF file is the correct newer version:

```
show running-config
```

When you check the output to verify you have the correct RCF, make sure that the following information is correct:

- The RCF banner
- The node and port settings
- Customizations

  The output varies according to your site configuration. Check the port settings and refer to the release notes for any changes specific to the RCF that you have installed.

6. Record any custom additions between the current `running-config` file and the RCF file in use.
7. After you verify that the RCF versions and switch settings are correct, copy the `running-config` file to the `startup-config` file.

```
cs1# copy running-config startup-config
[########################################] 100% Copy complete
```

8. Save basic configuration details to the `write_erase.cfg` file on the bootflash.

```
cs1# show run | i "username admin password" > bootflash:write_erase.cfg

cs1# show run | section "vrf context management" >> bootflash:write_erase.cfg

cs1# show run | section "interface mgmt0" >> bootflash:write_erase.cfg

cs1# show run | section "switchname" >> bootflash:write_erase.cfg
```

9. For RCF version 1.12 and later, run the following commands:

```
cs1# echo "hardware access-list tcam region ing-racl 1024" >>
bootflash:write_erase.cfg

cs1# echo "hardware access-list tcam region egr-racl 1024" >>
bootflash:write_erase.cfg

cs1# echo "hardware access-list tcam region ing-l2-qos 1280" >>
bootflash:write_erase.cfg
```

See the Knowledge Base article How to clear configuration on a Cisco interconnect switch while retaining remote connectivity for further details.

10. Verify that the `write_erase.cfg` file is populated as expected:

```
show file bootflash:write_erase.cfg
```

11. Issue the write erase command to erase the current saved configuration:

```
cs1# write erase
```

```
Warning: This command will erase the startup-configuration.

Do you wish to proceed anyway? (y/n) [n] y
```

12. Copy the previously saved basic configuration into the startup configuration.

```
cs1# copy bootflash:write_erase.cfg startup-config
```

13. Reboot switch cs1.

```
cs1# reload

This command will reboot the system. (y/n)? [n] y
```

14. Repeat steps 1 through 13 on switch cs2.
15. Connect the cluster ports of all nodes in the ONTAP cluster to switches cs1 and cs2.

Step 2: Verify the switch connections

1. Verify that the switch ports connected to the cluster ports are **up**.

```
show interface brief
```

Show example

```
cs1# show interface brief | grep up
.
.
Eth1/1/1      1       eth  access up      none
10G(D) --
Eth1/1/2      1       eth  access up      none
10G(D) --
Eth1/7        1       eth  trunk  up      none
100G(D) --
Eth1/8        1       eth  trunk  up      none
100G(D) --
.
.
```

2. Verify that the cluster nodes are in their correct cluster VLANs using the following commands:

```
show vlan brief

show interface trunk
```

Show example

```
cs1# show vlan brief

VLAN Name                              Status    Ports
---- --------------------------------- ---------
------------------------------
1    default                           active    Po1, Eth1/1, Eth1/2,
Eth1/3
                                                 Eth1/4, Eth1/5,
Eth1/6, Eth1/7
                                                 Eth1/8, Eth1/35,
Eth1/36
                                                 Eth1/9/1, Eth1/9/2,
Eth1/9/3
                                                 Eth1/9/4, Eth1/10/1,
Eth1/10/2
                                                 Eth1/10/3, Eth1/10/4
17   VLAN0017                          active    Eth1/1, Eth1/2,
Eth1/3, Eth1/4
                                                 Eth1/5, Eth1/6,
Eth1/7, Eth1/8
                                                 Eth1/9/1, Eth1/9/2,
Eth1/9/3
                                                 Eth1/9/4, Eth1/10/1,
Eth1/10/2
                                                 Eth1/10/3, Eth1/10/4
18   VLAN0018                          active    Eth1/1, Eth1/2,
Eth1/3, Eth1/4
                                                 Eth1/5, Eth1/6,
Eth1/7, Eth1/8
                                                 Eth1/9/1, Eth1/9/2,
Eth1/9/3
                                                 Eth1/9/4, Eth1/10/1,
Eth1/10/2
                                                 Eth1/10/3, Eth1/10/4
31   VLAN0031                          active    Eth1/11, Eth1/12,
Eth1/13
                                                 Eth1/14, Eth1/15,
Eth1/16
                                                 Eth1/17, Eth1/18,
Eth1/19
                                                 Eth1/20, Eth1/21,
Eth1/22
32   VLAN0032                          active    Eth1/23, Eth1/24,
Eth1/25
```

```
                                                  Eth1/26, Eth1/27,
Eth1/28
                                                  Eth1/29, Eth1/30,
Eth1/31
                                                  Eth1/32, Eth1/33,
Eth1/34
33   VLAN0033                         active    Eth1/11, Eth1/12,
Eth1/13
                                                  Eth1/14, Eth1/15,
Eth1/16
                                                  Eth1/17, Eth1/18,
Eth1/19
                                                  Eth1/20, Eth1/21,
Eth1/22
34   VLAN0034                         active    Eth1/23, Eth1/24,
Eth1/25
                                                  Eth1/26, Eth1/27,
Eth1/28
                                                  Eth1/29, Eth1/30,
Eth1/31
                                                  Eth1/32, Eth1/33,
Eth1/34

cs1# show interface trunk

----------------------------------------------------
Port          Native  Status        Port
              Vlan                  Channel
----------------------------------------------------
Eth1/1        1       trunking      --
Eth1/2        1       trunking      --
Eth1/3        1       trunking      --
Eth1/4        1       trunking      --
Eth1/5        1       trunking      --
Eth1/6        1       trunking      --
Eth1/7        1       trunking      --
Eth1/8        1       trunking      --
Eth1/9/1      1       trunking      --
Eth1/9/2      1       trunking      --
Eth1/9/3      1       trunking      --
Eth1/9/4      1       trunking      --
Eth1/10/1     1       trunking      --
Eth1/10/2     1       trunking      --
Eth1/10/3     1       trunking      --
Eth1/10/4     1       trunking      --
Eth1/11       33      trunking      --
```

```
Eth1/12       33      trunking      --
Eth1/13       33      trunking      --
Eth1/14       33      trunking      --
Eth1/15       33      trunking      --
Eth1/16       33      trunking      --
Eth1/17       33      trunking      --
Eth1/18       33      trunking      --
Eth1/19       33      trunking      --
Eth1/20       33      trunking      --
Eth1/21       33      trunking      --
Eth1/22       33      trunking      --
Eth1/23       34      trunking      --
Eth1/24       34      trunking      --
Eth1/25       34      trunking      --
Eth1/26       34      trunking      --
Eth1/27       34      trunking      --
Eth1/28       34      trunking      --
Eth1/29       34      trunking      --
Eth1/30       34      trunking      --
Eth1/31       34      trunking      --
Eth1/32       34      trunking      --
Eth1/33       34      trunking      --
Eth1/34       34      trunking      --
Eth1/35       1       trnk-bndl     Po1
Eth1/36       1       trnk-bndl     Po1
Po1           1       trunking      --

----------------------------------------------------
Port          Vlans Allowed on Trunk
----------------------------------------------------
Eth1/1        1,17-18
Eth1/2        1,17-18
Eth1/3        1,17-18
Eth1/4        1,17-18
Eth1/5        1,17-18
Eth1/6        1,17-18
Eth1/7        1,17-18
Eth1/8        1,17-18
Eth1/9/1      1,17-18
Eth1/9/2      1,17-18
Eth1/9/3      1,17-18
Eth1/9/4      1,17-18
Eth1/10/1     1,17-18
Eth1/10/2     1,17-18
Eth1/10/3     1,17-18
Eth1/10/4     1,17-18
```

```
Eth1/11       31,33
Eth1/12       31,33
Eth1/13       31,33
Eth1/14       31,33
Eth1/15       31,33
Eth1/16       31,33
Eth1/17       31,33
Eth1/18       31,33
Eth1/19       31,33
Eth1/20       31,33
Eth1/21       31,33
Eth1/22       31,33
Eth1/23       32,34
Eth1/24       32,34
Eth1/25       32,34
Eth1/26       32,34
Eth1/27       32,34
Eth1/28       32,34
Eth1/29       32,34
Eth1/30       32,34
Eth1/31       32,34
Eth1/32       32,34
Eth1/33       32,34
Eth1/34       32,34
Eth1/35       1
Eth1/36       1
Po1           1
..
..
..
..
..
```

For specific port and VLAN usage details, refer to the banner and important notes section in your RCF.

3. Verify that the ISL between cs1 and cs2 is functional:

```
show port-channel summary
```

Show example

```
cs1# show port-channel summary
Flags:  D - Down        P - Up in port-channel (members)
        I - Individual  H - Hot-standby (LACP only)
        s - Suspended   r - Module-removed
        b - BFD Session Wait
        S - Switched    R - Routed
        U - Up (port-channel)
        p - Up in delay-lacp mode (member)
        M - Not in use. Min-links not met
--------------------------------------------------------------------------
------------
Group Port-       Type     Protocol  Member Ports      Channel
--------------------------------------------------------------------------
------------
1     Po1(SU)     Eth      LACP      Eth1/35(P)        Eth1/36(P)
cs1#
```

Step 3: Set up your ONTAP cluster

NetApp recommends that you use System Manager to set up new clusters.

System Manager provides a simple and easy workflow for cluster set up and configuration including assigning a node management IP address, initializing the cluster, creating a local tier, configuring protocols and provisioning initial storage.

Go to Configure ONTAP on a new cluster with System Manager for setup instructions.

What's next?

After you've installed the RCF, you can configure switch health monitoring.

Upgrade your reference configuration file (RCF)

You upgrade your RCF version when you have an existing version of the RCF file installed on your operational switches.

Before you begin

Make sure you have the following:

- A current backup of the switch configuration.
- A fully functioning cluster (no errors in the logs or similar issues).
- The current RCF.
- If you are updating your RCF version, you need a boot configuration in the RCF that reflects the desired boot images.

If you need to change the boot configuration to reflect the current boot images, you must do so before reapplying the RCF so that the correct version is instantiated on future reboots.

No operational inter-switch link (ISL) is needed during this procedure. This is by design because RCF version changes can affect ISL connectivity temporarily. To ensure non-disruptive cluster operations, the following procedure migrates all of the cluster LIFs to the operational partner switch while performing the steps on the target switch.

Before installing a new switch software version and RCFs, you must erase the switch settings and perform basic configuration. You must be connected to the switch using the serial console or have preserved basic configuration information before erasing the switch settings.

Step 1: Prepare for the upgrade

1. Display the cluster ports on each node that are connected to the cluster switches:

   ```
   network device-discovery show
   ```

Show example

```
cluster1::*> network device-discovery show
Node/       Local  Discovered
Protocol    Port   Device (LLDP: ChassisID)  Interface
Platform
----------- ------ ------------------------- ----------------
--------
cluster1-01/cdp
            e0a    cs1                       Ethernet1/7       N9K-
C9336C
            e0d    cs2                       Ethernet1/7       N9K-
C9336C
cluster1-02/cdp
            e0a    cs1                       Ethernet1/8       N9K-
C9336C
            e0d    cs2                       Ethernet1/8       N9K-
C9336C
cluster1-03/cdp
            e0a    cs1                       Ethernet1/1/1     N9K-
C9336C
            e0b    cs2                       Ethernet1/1/1     N9K-
C9336C
cluster1-04/cdp
            e0a    cs1                       Ethernet1/1/2     N9K-
C9336C
            e0b    cs2                       Ethernet1/1/2     N9K-
C9336C
cluster1::*>
```

2. Check the administrative and operational status of each cluster port.
   a. Verify that all the cluster ports are **up** with a healthy status:

      `network port show –role cluster`

Show example

```
cluster1::*> network port show -role cluster

Node: cluster1-01

Ignore
                                                  Speed(Mbps)
Health   Health
Port      IPspace      Broadcast Domain Link MTU  Admin/Oper
Status   Status
--------- ------------ ---------------- ---- ---- -----------
-------- ------
e0a       Cluster      Cluster          up   9000  auto/100000
healthy false
e0d       Cluster      Cluster          up   9000  auto/100000
healthy false

Node: cluster1-02

Ignore
                                                  Speed(Mbps)
Health   Health
Port      IPspace      Broadcast Domain Link MTU  Admin/Oper
Status   Status
--------- ------------ ---------------- ---- ---- -----------
-------- ------
e0a       Cluster      Cluster          up   9000  auto/100000
healthy false
e0d       Cluster      Cluster          up   9000  auto/100000
healthy false
8 entries were displayed.

Node: cluster1-03

   Ignore
                                                  Speed(Mbps)
Health   Health
Port      IPspace      Broadcast Domain Link MTU  Admin/Oper
Status   Status
--------- ------------ ---------------- ---- ---- -----------
-------- ------
e0a       Cluster      Cluster          up   9000  auto/10000
healthy  false
e0b       Cluster      Cluster          up   9000  auto/10000
healthy  false
```

```
Node: cluster1-04

Ignore
                                                          Speed(Mbps)
Health   Health
Port      IPspace      Broadcast Domain Link MTU  Admin/Oper
Status   Status
--------- ------------ ---------------- ---- ---- -----------
-------- ------
e0a       Cluster      Cluster          up   9000  auto/10000
healthy  false
e0b       Cluster      Cluster          up   9000  auto/10000
healthy  false
cluster1::*>
```

b. Verify that all the cluster interfaces (LIFs) are on the home port:

```
network interface show -role cluster
```

Show example

```
cluster1::*> network interface show -role cluster
            Logical            Status     Network
Current      Current Is
Vserver     Interface          Admin/Oper Address/Mask      Node
Port    Home
----------- ------------------ ---------- -----------------
------------ ------- ----
Cluster
            cluster1-01_clus1  up/up     169.254.3.4/23
cluster1-01  e0a     true
            cluster1-01_clus2  up/up     169.254.3.5/23
cluster1-01  e0d     true
            cluster1-02_clus1  up/up     169.254.3.8/23
cluster1-02  e0a     true
            cluster1-02_clus2  up/up     169.254.3.9/23
cluster1-02  e0d     true
            cluster1-03_clus1  up/up     169.254.1.3/23
cluster1-03  e0a     true
            cluster1-03_clus2  up/up     169.254.1.1/23
cluster1-03  e0b     true
            cluster1-04_clus1  up/up     169.254.1.6/23
cluster1-04  e0a     true
            cluster1-04_clus2  up/up     169.254.1.7/23
cluster1-04  e0b     true
8 entries were displayed.
cluster1::*>
```

c. Verify that the cluster displays information for both cluster switches:

```
system cluster-switch show -is-monitoring-enabled-operational true
```

Show example

```
cluster1::*> system cluster-switch show -is-monitoring-enabled
-operational true
Switch                      Type               Address
Model
--------------------------- ------------------ ----------------
-----
cs1                         cluster-network    10.233.205.90
N9K-C9336C
     Serial Number: FOCXXXXXXGD
      Is Monitored: true
            Reason: None
  Software Version: Cisco Nexus Operating System (NX-OS)
Software, Version
                    9.3(5)
    Version Source: CDP

cs2                         cluster-network    10.233.205.91
N9K-C9336C
     Serial Number: FOCXXXXXXGS
      Is Monitored: true
            Reason: None
  Software Version: Cisco Nexus Operating System (NX-OS)
Software, Version
                    9.3(5)
    Version Source: CDP
cluster1::*>
```

3. Disable auto-revert on the cluster LIFs.

```
cluster1::*> network interface modify -vserver Cluster -lif * -auto-revert
false
```

Step 2: Configure ports

1. On cluster switch cs1, shut down the ports connected to the cluster ports of the nodes.

```
cs1(config)# interface eth1/1/1-2,eth1/7-8

cs1(config-if-range)# shutdown
```

> Make sure to shutdown **all** connected cluster ports to avoid any network connection issues. See the Knowledge Base article Node out of quorum when migrating cluster LIF during switch OS upgrade for further details.

2. Verify that the cluster LIFs have failed over to the ports hosted on cluster switch cs1. This might take a few seconds.

   ```
   network interface show -role cluster
   ```

   Show example

   ```
   cluster1::*> network interface show -role cluster
               Logical           Status     Network            Current
   Current Is
   Vserver     Interface         Admin/Oper Address/Mask       Node
   Port    Home
   ----------- ----------------- ---------- ------------------
   ------------ ------- ----
   Cluster
               cluster1-01_clus1 up/up      169.254.3.4/23
   cluster1-01   e0a     true
               cluster1-01_clus2 up/up      169.254.3.5/23
   cluster1-01   e0a     false
               cluster1-02_clus1 up/up      169.254.3.8/23
   cluster1-02   e0a     true
               cluster1-02_clus2 up/up      169.254.3.9/23
   cluster1-02   e0a     false
               cluster1-03_clus1 up/up      169.254.1.3/23
   cluster1-03   e0a     true
               cluster1-03_clus2 up/up      169.254.1.1/23
   cluster1-03   e0a     false
               cluster1-04_clus1 up/up      169.254.1.6/23
   cluster1-04   e0a     true
               cluster1-04_clus2 up/up      169.254.1.7/23
   cluster1-04   e0a     false
   8 entries were displayed.
   cluster1::*>
   ```

3. Verify that the cluster is healthy:

   ```
   cluster show
   ```

Show example

```
cluster1::*> cluster show
Node                  Health  Eligibility   Epsilon
--------------------- ------- ------------  -------
cluster1-01           true    true          false
cluster1-02           true    true          false
cluster1-03           true    true          true
cluster1-04           true    true          false
4 entries were displayed.
cluster1::*>
```

4. If you have not already done so, save a copy of the current switch configuration by copying the output of the following command to a text file:

   ```
   show running-config
   ```

   a. Record any custom additions between the current running-config and the RCF file in use (such as an SNMP configuration for your organization).

   b. For NX-OS 10.2 and later, use the `show diff running-config` command to compare with the saved RCF file in the bootflash. Otherwise, use a third party diff or compare tool.

5. Save basic configuration details to the write_erase.cfg file on the bootflash.

   ```
   cs1# show run | i "username admin password" > bootflash:write_erase.cfg

   cs1# show run | section "vrf context management" >> bootflash:write_erase.cfg

   cs1# show run | section "interface mgmt0" >> bootflash:write_erase.cfg

   cs1# show run | section "switchname" >> bootflash:write_erase.cfg
   ```

6. For RCF version 1.12 and later, run the following commands:

   ```
   cs1# echo "hardware access-list tcam region ing-racl 1024" >>
   bootflash:write_erase.cfg

   cs1# echo "hardware access-list tcam region egr-racl 1024" >>
   bootflash:write_erase.cfg

   cs1# echo "hardware access-list tcam region ing-l2-qos 1280" >>
   bootflash:write_erase.cfg
   ```

   See the Knowledge Base article How to clear configuration on a Cisco interconnect switch while retaining remote connectivity for further details.

7. Verify that the write_erase.cfg file is populated as expected:

   ```
   show file bootflash:write_erase.cfg
   ```

8. Issue the write erase command to erase the current saved configuration:

```
cs1# write erase

Warning: This command will erase the startup-configuration.

Do you wish to proceed anyway? (y/n) [n] y
```

9. Copy the previously saved basic configuration into the startup configuration.

```
cs1# copy bootflash:write_erase.cfg startup-config
```

10. Perform a reboot of the switch:

```
switch# reload

This command will reboot the system. (y/n)? [n] y
```

11. After the management IP address is reachable again, log in to the switch through SSH.

    You might need to update host file entries related to the SSH keys.

12. Copy the RCF to the bootflash of switch cs1 using one of the following transfer protocols: FTP, TFTP, SFTP, or SCP.

    For more information on Cisco commands, see the appropriate guide in the Cisco Nexus 9000 Series NX-OS Command Reference guides.

    Show example

    This example shows TFTP being used to copy an RCF to the bootflash on switch cs1:

```
cs1# copy tftp: bootflash: vrf management
Enter source filename: Nexus_9336C_RCF_v1.6-Cluster-HA-Breakout.txt
Enter hostname for the tftp server: 172.22.201.50
Trying to connect to tftp server......Connection to Server
Established.
TFTP get operation was successful
Copy complete, now saving to disk (please wait)...
```

13. Apply the RCF previously downloaded to the bootflash.

    For more information on Cisco commands, see the appropriate guide in the Cisco Nexus 9000 Series NX-OS Command Reference guides.

Show example

This example shows the RCF file `Nexus_9336C_RCF_v1.6-Cluster-HA-Breakout.txt` being installed on switch cs1:

```
cs1# copy Nexus_9336C_RCF_v1.6-Cluster-HA-Breakout.txt running-
config echo-commands
```

14. Examine the banner output from the `show banner motd` command. You must read and follow these instructions to ensure the proper configuration and operation of the switch.

Show example

```
cs1# show banner motd

*****************************************************************
**********
* NetApp Reference Configuration File (RCF)
*
* Switch   : Nexus N9K-C9336C-FX2
* Filename : Nexus_9336C_RCF_v1.6-Cluster-HA-Breakout.txt
* Date     : 10-23-2020
* Version  : v1.6
*
* Port Usage:
* Ports  1- 3: Breakout mode (4x10G) Intra-Cluster Ports, int
e1/1/1-4, e1/2/1-4
, e1/3/1-4
* Ports  4- 6: Breakout mode (4x25G) Intra-Cluster/HA Ports, int
e1/4/1-4, e1/5/
1-4, e1/6/1-4
* Ports  7-34: 40/100GbE Intra-Cluster/HA Ports, int e1/7-34
* Ports 35-36: Intra-Cluster ISL Ports, int e1/35-36
*
* Dynamic breakout commands:
* 10G: interface breakout module 1 port <range> map 10g-4x
* 25G: interface breakout module 1 port <range> map 25g-4x
*
* Undo breakout commands and return interfaces to 40/100G
configuration in confi
g mode:
* no interface breakout module 1 port <range> map 10g-4x
* no interface breakout module 1 port <range> map 25g-4x
* interface Ethernet <interfaces taken out of breakout mode>
* inherit port-profile 40-100G
* priority-flow-control mode auto
* service-policy input HA
* exit
*
*****************************************************************
**********
```

15. Verify that the RCF file is the correct newer version:

    ```
    show running-config
    ```

When you check the output to verify you have the correct RCF, make sure that the following information is correct:

- The RCF banner
- The node and port settings
- Customizations

  The output varies according to your site configuration. Check the port settings and refer to the release notes for any changes specific to the RCF that you have installed.

16. Reapply any previous customizations to the switch configuration.

1. After you verify the RCF versions, custom additions, and switch settings are correct, copy the running-config file to the startup-config file.

   For more information on Cisco commands, see the appropriate guide in the Cisco Nexus 9000 Series NX-OS Command Reference guides.

   ```
   cs1# copy running-config startup-config

   [] 100% Copy complete
   ```

2. Reboot switch cs1. You can ignore the “cluster switch health monitor” alerts and “cluster ports down” events reported on the nodes while the switch reboots.

   ```
   cs1# reload

   This command will reboot the system. (y/n)? [n] y
   ```

3. Verify the health of cluster ports on the cluster.
   a. Verify that cluster ports are up and healthy across all nodes in the cluster:

      ```
      network port show -role cluster
      ```

Show example

```
cluster1::*> network port show -role cluster

Node: cluster1-01

Ignore
                                                  Speed(Mbps)
Health   Health
Port      IPspace      Broadcast Domain Link MTU  Admin/Oper
Status   Status
--------- ------------ ---------------- ---- ---- -----------
-------- ------
e0a       Cluster      Cluster          up   9000  auto/10000
healthy  false
e0b       Cluster      Cluster          up   9000  auto/10000
healthy  false

Node: cluster1-02

Ignore
                                                  Speed(Mbps)
Health   Health
Port      IPspace      Broadcast Domain Link MTU  Admin/Oper
Status   Status
--------- ------------ ---------------- ---- ---- -----------
-------- ------
e0a       Cluster      Cluster          up   9000  auto/10000
healthy  false
e0b       Cluster      Cluster          up   9000  auto/10000
healthy  false

Node: cluster1-03

Ignore
                                                  Speed(Mbps)
Health   Health
Port      IPspace      Broadcast Domain Link MTU  Admin/Oper
Status   Status
--------- ------------ ---------------- ---- ---- -----------
-------- ------
e0a       Cluster      Cluster          up   9000  auto/100000
healthy false
e0d       Cluster      Cluster          up   9000  auto/100000
healthy false
```

```
Node: cluster1-04

Ignore
                                                          Speed(Mbps)
Health   Health
Port      IPspace      Broadcast Domain Link MTU  Admin/Oper
Status   Status
--------- ------------ ---------------- ---- ---- -----------
-------- ------
e0a       Cluster      Cluster          up   9000  auto/100000
healthy false
e0d       Cluster      Cluster          up   9000  auto/100000
healthy false
8 entries were displayed.
```

b. Verify the switch health from the cluster.

```
network device-discovery show -protocol cdp
```

Show example

```
cluster1::*> network device-discovery show -protocol cdp
Node/       Local  Discovered
Protocol    Port   Device (LLDP: ChassisID)  Interface
Platform
----------- ------ ------------------------- -----------------
--------
cluster1-01/cdp
            e0a    cs1                       Ethernet1/7
N9K-C9336C
            e0d    cs2                       Ethernet1/7
N9K-C9336C
cluster01-2/cdp
            e0a    cs1                       Ethernet1/8
N9K-C9336C
            e0d    cs2                       Ethernet1/8
N9K-C9336C
cluster01-3/cdp
            e0a    cs1                       Ethernet1/1/1
N9K-C9336C
            e0b    cs2                       Ethernet1/1/1
N9K-C9336C
cluster1-04/cdp
            e0a    cs1                       Ethernet1/1/2
N9K-C9336C
            e0b    cs2                       Ethernet1/1/2
N9K-C9336C

cluster1::*> system cluster-switch show -is-monitoring-enabled
-operational true
Switch                      Type               Address
Model
--------------------------- ------------------ ----------------
-----
cs1                         cluster-network    10.233.205.90
NX9-C9336C
     Serial Number: FOCXXXXXXGD
      Is Monitored: true
            Reason: None
  Software Version: Cisco Nexus Operating System (NX-OS)
Software, Version
                    9.3(5)
    Version Source: CDP

cs2                         cluster-network    10.233.205.91
```

```
NX9-C9336C
     Serial Number: FOCXXXXXXGS
      Is Monitored: true
            Reason: None
  Software Version: Cisco Nexus Operating System (NX-OS)
Software, Version
                    9.3(5)
    Version Source: CDP

2 entries were displayed.
```

You might observe the following output on the cs1 switch console depending on the RCF version previously loaded on the switch:

```
2020 Nov 17 16:07:18 cs1 %$ VDC-1 %$ %STP-2-UNBLOCK_CONSIST_PORT:
Unblocking port port-channel1 on VLAN0092. Port consistency
restored.
2020 Nov 17 16:07:23 cs1 %$ VDC-1 %$ %STP-2-BLOCK_PVID_PEER:
Blocking port-channel1 on VLAN0001. Inconsistent peer vlan.
2020 Nov 17 16:07:23 cs1 %$ VDC-1 %$ %STP-2-BLOCK_PVID_LOCAL:
Blocking port-channel1 on VLAN0092. Inconsistent local vlan.
```

4. Verify that the cluster is healthy:

   `cluster show`

   Show example

```
cluster1::*> cluster show
Node                 Health   Eligibility   Epsilon
-------------------- -------- ------------- -------
cluster1-01          true     true          false
cluster1-02          true     true          false
cluster1-03          true     true          true
cluster1-04          true     true          false
4 entries were displayed.
cluster1::*>
```

5. Repeat steps 1 to 20 on switch cs2.
6. Enable auto-revert on the cluster LIFs.

   `cluster1::*> **network interface modify -vserver Cluster -lif * -auto-revert True**`

Step 3: Verify the cluster network configuration and cluster health

1. Verify that the switch ports connected to the cluster ports are **up**.

   ```
   show interface brief
   ```

   Show example

   ```
   cs1# show interface brief | grep up
   .
   .
   Eth1/1/1      1       eth  access up      none
   10G(D) --
   Eth1/1/2      1       eth  access up      none
   10G(D) --
   Eth1/7        1       eth  trunk  up      none
   100G(D) --
   Eth1/8        1       eth  trunk  up      none
   100G(D) --
   .
   .
   ```

2. Verify that the expected nodes are still connected:

   ```
   show cdp neighbors
   ```

Show example

```
cs1# show cdp neighbors

Capability Codes: R - Router, T - Trans-Bridge, B - Source-Route-
Bridge
                  S - Switch, H - Host, I - IGMP, r - Repeater,
                  V - VoIP-Phone, D - Remotely-Managed-Device,
                  s - Supports-STP-Dispute

Device-ID          Local Intrfce  Hldtme Capability  Platform
Port ID
node1              Eth1/1         133    H           FAS2980
e0a
node2              Eth1/2         133    H           FAS2980
e0a
cs1                Eth1/35        175    R S I s     N9K-C9336C
Eth1/35
cs1                Eth1/36        175    R S I s     N9K-C9336C
Eth1/36

Total entries displayed: 4
```

3. Verify that the cluster nodes are in their correct cluster VLANs using the following commands:

   `show vlan brief`

   `show interface trunk`

Show example

```
cs1# show vlan brief

VLAN Name                              Status    Ports
---- --------------------------------- ---------
------------------------------
1    default                           active    Po1, Eth1/1, Eth1/2,
Eth1/3
                                                 Eth1/4, Eth1/5,
Eth1/6, Eth1/7
                                                 Eth1/8, Eth1/35,
Eth1/36
                                                 Eth1/9/1, Eth1/9/2,
Eth1/9/3
                                                 Eth1/9/4, Eth1/10/1,
Eth1/10/2
                                                 Eth1/10/3, Eth1/10/4
17   VLAN0017                          active    Eth1/1, Eth1/2,
Eth1/3, Eth1/4
                                                 Eth1/5, Eth1/6,
Eth1/7, Eth1/8
                                                 Eth1/9/1, Eth1/9/2,
Eth1/9/3
                                                 Eth1/9/4, Eth1/10/1,
Eth1/10/2
                                                 Eth1/10/3, Eth1/10/4
18   VLAN0018                          active    Eth1/1, Eth1/2,
Eth1/3, Eth1/4
                                                 Eth1/5, Eth1/6,
Eth1/7, Eth1/8
                                                 Eth1/9/1, Eth1/9/2,
Eth1/9/3
                                                 Eth1/9/4, Eth1/10/1,
Eth1/10/2
                                                 Eth1/10/3, Eth1/10/4
31   VLAN0031                          active    Eth1/11, Eth1/12,
Eth1/13
                                                 Eth1/14, Eth1/15,
Eth1/16
                                                 Eth1/17, Eth1/18,
Eth1/19
                                                 Eth1/20, Eth1/21,
Eth1/22
32   VLAN0032                          active    Eth1/23, Eth1/24,
Eth1/25
```

```
                                                  Eth1/26, Eth1/27,
Eth1/28
                                                  Eth1/29, Eth1/30,
Eth1/31
                                                  Eth1/32, Eth1/33,
Eth1/34
33   VLAN0033                         active    Eth1/11, Eth1/12,
Eth1/13
                                                  Eth1/14, Eth1/15,
Eth1/16
                                                  Eth1/17, Eth1/18,
Eth1/19
                                                  Eth1/20, Eth1/21,
Eth1/22
34   VLAN0034                         active    Eth1/23, Eth1/24,
Eth1/25
                                                  Eth1/26, Eth1/27,
Eth1/28
                                                  Eth1/29, Eth1/30,
Eth1/31
                                                  Eth1/32, Eth1/33,
Eth1/34

cs1# show interface trunk

----------------------------------------------------
Port          Native  Status        Port
              Vlan                  Channel
----------------------------------------------------
Eth1/1        1       trunking      --
Eth1/2        1       trunking      --
Eth1/3        1       trunking      --
Eth1/4        1       trunking      --
Eth1/5        1       trunking      --
Eth1/6        1       trunking      --
Eth1/7        1       trunking      --
Eth1/8        1       trunking      --
Eth1/9/1      1       trunking      --
Eth1/9/2      1       trunking      --
Eth1/9/3      1       trunking      --
Eth1/9/4      1       trunking      --
Eth1/10/1     1       trunking      --
Eth1/10/2     1       trunking      --
Eth1/10/3     1       trunking      --
Eth1/10/4     1       trunking      --
Eth1/11       33      trunking      --
```

```
Eth1/12       33      trunking      --
Eth1/13       33      trunking      --
Eth1/14       33      trunking      --
Eth1/15       33      trunking      --
Eth1/16       33      trunking      --
Eth1/17       33      trunking      --
Eth1/18       33      trunking      --
Eth1/19       33      trunking      --
Eth1/20       33      trunking      --
Eth1/21       33      trunking      --
Eth1/22       33      trunking      --
Eth1/23       34      trunking      --
Eth1/24       34      trunking      --
Eth1/25       34      trunking      --
Eth1/26       34      trunking      --
Eth1/27       34      trunking      --
Eth1/28       34      trunking      --
Eth1/29       34      trunking      --
Eth1/30       34      trunking      --
Eth1/31       34      trunking      --
Eth1/32       34      trunking      --
Eth1/33       34      trunking      --
Eth1/34       34      trunking      --
Eth1/35       1       trnk-bndl     Po1
Eth1/36       1       trnk-bndl     Po1
Po1           1       trunking      --

----------------------------------------------------
Port          Vlans Allowed on Trunk
----------------------------------------------------
Eth1/1        1,17-18
Eth1/2        1,17-18
Eth1/3        1,17-18
Eth1/4        1,17-18
Eth1/5        1,17-18
Eth1/6        1,17-18
Eth1/7        1,17-18
Eth1/8        1,17-18
Eth1/9/1      1,17-18
Eth1/9/2      1,17-18
Eth1/9/3      1,17-18
Eth1/9/4      1,17-18
Eth1/10/1     1,17-18
Eth1/10/2     1,17-18
Eth1/10/3     1,17-18
Eth1/10/4     1,17-18
```

```
Eth1/11       31,33
Eth1/12       31,33
Eth1/13       31,33
Eth1/14       31,33
Eth1/15       31,33
Eth1/16       31,33
Eth1/17       31,33
Eth1/18       31,33
Eth1/19       31,33
Eth1/20       31,33
Eth1/21       31,33
Eth1/22       31,33
Eth1/23       32,34
Eth1/24       32,34
Eth1/25       32,34
Eth1/26       32,34
Eth1/27       32,34
Eth1/28       32,34
Eth1/29       32,34
Eth1/30       32,34
Eth1/31       32,34
Eth1/32       32,34
Eth1/33       32,34
Eth1/34       32,34
Eth1/35       1
Eth1/36       1
Po1           1
..
..
..
..
..
```

For specific port and VLAN usage details, refer to the banner and important notes section in your RCF.

4. Verify that the ISL between cs1 and cs2 is functional:

```
show port-channel summary
```

Show example

```
cs1# show port-channel summary
Flags:  D - Down        P - Up in port-channel (members)
        I - Individual  H - Hot-standby (LACP only)
        s - Suspended   r - Module-removed
        b - BFD Session Wait
        S - Switched    R - Routed
        U - Up (port-channel)
        p - Up in delay-lacp mode (member)
        M - Not in use. Min-links not met
--------------------------------------------------------------------------
------------
Group Port-       Type     Protocol  Member Ports      Channel
--------------------------------------------------------------------------
------------
1     Po1(SU)     Eth      LACP      Eth1/35(P)        Eth1/36(P)
cs1#
```

5. Verify that the cluster LIFs have reverted to their home port:

   `network interface show -role cluster`

Show example

```
cluster1::*> network interface show -role cluster
            Logical            Status     Network            Current
Current Is
Vserver     Interface          Admin/Oper Address/Mask       Node
Port    Home
----------- ------------------ ---------- ------------------
------------------- ------- ----
Cluster
            cluster1-01_clus1  up/up      169.254.3.4/23
cluster1-01         e0d     true
            cluster1-01_clus2  up/up      169.254.3.5/23
cluster1-01         e0d     true
            cluster1-02_clus1  up/up      169.254.3.8/23
cluster1-02         e0d     true
            cluster1-02_clus2  up/up      169.254.3.9/23
cluster1-02         e0d     true
            cluster1-03_clus1  up/up      169.254.1.3/23
cluster1-03         e0b     true
            cluster1-03_clus2  up/up      169.254.1.1/23
cluster1-03         e0b     true
            cluster1-04_clus1  up/up      169.254.1.6/23
cluster1-04         e0b     true
            cluster1-04_clus2  up/up      169.254.1.7/23
cluster1-04         e0b     true
8 entries were displayed.
cluster1::*>
```

If any cluster LIFs have not returned to their home ports, revert them manually from the local node:

`network interface revert -vserver vserver_name -lif lif_name`

6. Verify that the cluster is healthy:

`cluster show`

Show example

```
cluster1::*> cluster show
Node                 Health  Eligibility   Epsilon
-------------------- ------- ------------- -------
cluster1-01          true    true          false
cluster1-02          true    true          false
cluster1-03          true    true          true
cluster1-04          true    true          false
4 entries were displayed.
cluster1::*>
```

7. Verify the connectivity of the remote cluster interfaces:

ONTAP 9.9.1 and later

You can use the `network interface check cluster-connectivity` command to start an accessibility check for cluster connectivity and then display the details:

`network interface check cluster-connectivity start` and `network interface check cluster-connectivity show`

```
cluster1::*> network interface check cluster-connectivity start
```

NOTE: Wait for a number of seconds before running the `show` command to display the details.

```
cluster1::*> network interface check cluster-connectivity show
                                  Source               Destination
Packet
Node   Date                       LIF                  LIF
Loss
------ -------------------------- -------------------
------------------ -----------
node1
       3/5/2022 19:21:18 -06:00   cluster1-01_clus2    cluster1-02-
clus1   none
       3/5/2022 19:21:20 -06:00   cluster1-01_clus2    cluster1-
02_clus2   none
node2
       3/5/2022 19:21:18 -06:00   cluster1-02_clus2    cluster1-
01_clus1   none
       3/5/2022 19:21:20 -06:00   cluster1-02_clus2    cluster1-
01_clus2   none
```

All ONTAP releases

For all ONTAP releases, you can also use the `cluster ping-cluster -node <name>` command to check the connectivity:

```
cluster ping-cluster -node <name>
```

```
cluster1::*> cluster ping-cluster -node local
Host is cluster1-03
Getting addresses from network interface table...
Cluster cluster1-03_clus1 169.254.1.3 cluster1-03 e0a
Cluster cluster1-03_clus2 169.254.1.1 cluster1-03 e0b
Cluster cluster1-04_clus1 169.254.1.6 cluster1-04 e0a
Cluster cluster1-04_clus2 169.254.1.7 cluster1-04 e0b
Cluster cluster1-01_clus1 169.254.3.4 cluster1-01 e0a
Cluster cluster1-01_clus2 169.254.3.5 cluster1-01 e0d
Cluster cluster1-02_clus1 169.254.3.8 cluster1-02 e0a
Cluster cluster1-02_clus2 169.254.3.9 cluster1-02 e0d
Local = 169.254.1.3 169.254.1.1
Remote = 169.254.1.6 169.254.1.7 169.254.3.4 169.254.3.5 169.254.3.8
169.254.3.9
Cluster Vserver Id = 4294967293
Ping status:
............
Basic connectivity succeeds on 12 path(s)
Basic connectivity fails on 0 path(s)
................................................
Detected 9000 byte MTU on 12 path(s):
    Local 169.254.1.3 to Remote 169.254.1.6
    Local 169.254.1.3 to Remote 169.254.1.7
    Local 169.254.1.3 to Remote 169.254.3.4
    Local 169.254.1.3 to Remote 169.254.3.5
    Local 169.254.1.3 to Remote 169.254.3.8
    Local 169.254.1.3 to Remote 169.254.3.9
    Local 169.254.1.1 to Remote 169.254.1.6
    Local 169.254.1.1 to Remote 169.254.1.7
    Local 169.254.1.1 to Remote 169.254.3.4
    Local 169.254.1.1 to Remote 169.254.3.5
    Local 169.254.1.1 to Remote 169.254.3.8
    Local 169.254.1.1 to Remote 169.254.3.9
Larger than PMTU communication succeeds on 12 path(s)
RPC status:
6 paths up, 0 paths down (tcp check)
6 paths up, 0 paths down (udp check)
```

What's next?

After you've upgraded the RCF, you can configure switch health monitoring.

Reset the 9336C-FX2 shared switch to factory defaults

To reset the 9336C-FX2 shared switch to factory defaults, you must erase the 9336C-FX2

switch settings.

About this task

- You must be connected to the switch using the serial console.
- This task resets the configuration of the management network.

Steps

1. Erase the existing configuration:

   `write erase`

   ```
   (cs2)# write erase

   Warning: This command will erase the startup-configuration.
   Do you wish to proceed anyway? (y/n) [n] y
   ```

2. Reload the switch software:

   `reload`

   ```
   (cs2)# reload

   This command will reboot the system. (y/n)? [n] y
   ```

   The system reboots and enters the configuration wizard. During the boot, if you receive the prompt “Abort Auto Provisioning and continue with normal setup? (yes/no)[n]”, you should respond **yes** to proceed.

What’s next

After you’ve reset your switches, you can reconfigure them as needed.

Migrate switches

Migrate from a switchless cluster with direct-attached storage

You can migrate from a switchless cluster with direct-attached storage by adding two new shared switches.

The procedure you use depends on whether you have two dedicated cluster-network ports on each controller or a single cluster port on each controller. The process documented works for all nodes using optical or Twinax ports, but is not supported on this switch if nodes are using onboard 10Gb BASE-T RJ45 ports for the cluster-network ports.

Most systems require two dedicated cluster-network ports on each controller. See Cisco Ethernet Switches for more information.

If you have an existing two-node switchless cluster environment, you can migrate to a two-node switched cluster environment using Cisco Nexus 9336C-FX2 switches to enable you to scale beyond two nodes in the cluster.

Review requirements

Ensure that:

- For the two-node switchless configuration:
  - The two-node switchless configuration is properly set up and functioning.
  - The nodes are running ONTAP 9.8 and later.
  - All cluster ports are in the **up** state.
  - All cluster logical interfaces (LIFs) are in the **up** state and on their **home** ports.
- For the Cisco Nexus 9336C-FX2 switch configuration:
  - Both switches have management network connectivity.
  - There is console access to the cluster switches.
  - Nexus 9336C-FX2 node-to-node switch and switch-to-switch connections use Twinax or fiber cables.
  - The NetApp Hardware Universe contains more information about cabling.
  - Inter-Switch Link (ISL) cables are connected to ports 1/35 and 1/36 on both 9336C-FX2 switches.
- Initial customization of the 9336C-FX2 switches are completed. So that the:
  - 9336C-FX2 switches are running the latest version of software
  - Reference Configuration Files (RCFs) have been applied to the switches
  - Any site customization, such as SMTP, SNMP, and SSH is configured on the new switches.

Migrate the switches

About the examples

The examples in this procedure use the following cluster switch and node nomenclature:

- The names of the 9336C-FX2 switches are *cs1* and *cs2*.
- The names of the cluster SVMs are *node1* and *node2*.
- The names of the LIFs are *node1_clus1* and *node1_clus2* on node 1, and *node2_clus1* and *node2_clus2* on node 2 respectively.
- The cluster1::*> prompt indicates the name of the cluster.
- The cluster ports used in this procedure are *e3a* and *e3b*, as per the AFF A400 controller. The Hardware Universe contains the latest information about the actual cluster ports for your platforms.

Step 1: Migrate from a switchless cluster with direct-attached

1. If AutoSupport is enabled on this cluster, suppress automatic case creation by invoking an AutoSupport message: `system node autosupport invoke -node * -type all -message MAINT=xh`.

   where x is the duration of the maintenance window in hours.

   > The AutoSupport message notifies technical support of this maintenance task so that automatic case creation is suppressed during the maintenance window.

2. Change the privilege level to advanced, entering y when prompted to continue:

```
set -privilege advanced
```

The advanced prompt (*>) appears.

3. Disable all node-facing ports (not ISL ports) on both the new cluster switches cs1 and cs2. You must not disable the ISL ports.

Show example

The following example shows that node-facing ports 1 through 34 are disabled on switch cs1:

```
cs1# config
Enter configuration commands, one per line. End with CNTL/Z.
cs1(config)# interface e1/1-34
cs1(config-if-range)# shutdown
```

4. Verify that the ISL and the physical ports on the ISL between the two 9336C-FX2 switches cs1 and cs2 are up on ports 1/35 and 1/36:

```
show port-channel summary
```

Show example

The following example shows that the ISL ports are up on switch cs1:

```
cs1# show port-channel summary
Flags:  D - Down        P - Up in port-channel (members)
        I - Individual  H - Hot-standby (LACP only)
        s - Suspended   r - Module-removed
        b - BFD Session Wait
        S - Switched    R - Routed
        U - Up (port-channel)
        p - Up in delay-lacp mode (member)
        M - Not in use. Min-links not met
--------------------------------------------------------------------------
------------
Group Port-       Type     Protocol  Member Ports
      Channel
--------------------------------------------------------------------------
------------
1     Po1(SU)     Eth      LACP      Eth1/35(P)   Eth1/36(P)
```

The following example shows that the ISL ports are up on switch cs2:

```
       cs2# show port-channel summary
        Flags:  D - Down        P - Up in port-channel (members)
        I - Individual  H - Hot-standby (LACP only)
        s - Suspended   r - Module-removed
        b - BFD Session Wait
        S - Switched    R - Routed
        U - Up (port-channel)
        p - Up in delay-lacp mode (member)
        M - Not in use. Min-links not met
--------------------------------------------------------------------------
------------
Group Port-       Type     Protocol  Member Ports
      Channel
--------------------------------------------------------------------------
------------
1     Po1(SU)     Eth      LACP      Eth1/35(P)   Eth1/36(P)
```

5. Display the list of neighboring devices:

```
show cdp neighbors
```

This command provides information about the devices that are connected to the system.

Show example

The following example lists the neighboring devices on switch cs1:

```
cs1# show cdp neighbors
Capability Codes: R - Router, T - Trans-Bridge, B - Source-Route-
Bridge
                  S - Switch, H - Host, I - IGMP, r - Repeater,
                  V - VoIP-Phone, D - Remotely-Managed-Device,
                  s - Supports-STP-Dispute
Device-ID          Local Intrfce  Hldtme Capability  Platform
Port ID
cs2                Eth1/35        175    R S I s     N9K-C9336C
Eth1/35
cs2                Eth1/36        175    R S I s     N9K-C9336C
Eth1/36
Total entries displayed: 2
```

The following example lists the neighboring devices on switch cs2:

```
cs2# show cdp neighbors
Capability Codes: R - Router, T - Trans-Bridge, B - Source-Route-
Bridge
                  S - Switch, H - Host, I - IGMP, r - Repeater,
                  V - VoIP-Phone, D - Remotely-Managed-Device,
                  s - Supports-STP-Dispute
Device-ID          Local Intrfce  Hldtme Capability  Platform
Port ID
cs1                Eth1/35        177    R S I s     N9K-C9336C
Eth1/35
cs1           )    Eth1/36        177    R S I s     N9K-C9336C
Eth1/36

Total entries displayed: 2
```

6. Verify that all cluster ports are up:

```
network port show - ipspace Cluster
```

Each port should display up for Link and healthy for Health Status.

Show example

```
cluster1::*> network port show -ipspace Cluster

Node: node1
                                                                  Speed(Mbps)
Health
Port      IPspace      Broadcast Domain Link MTU  Admin/Oper
Status
--------- ------------ ---------------- ---- ---- ------------
---------
e3a       Cluster      Cluster          up   9000  auto/100000
healthy
e3b       Cluster      Cluster          up   9000  auto/100000
healthy

Node: node2
                                                                  Speed(Mbps)
Health
Port      IPspace      Broadcast Domain Link MTU  Admin/Oper
Status
--------- ------------ ---------------- ---- ---- ------------
---------
e3a       Cluster      Cluster          up   9000  auto/100000
healthy
e3b       Cluster      Cluster          up   9000  auto/100000
healthy
4 entries were displayed.
```

7. Verify that all cluster LIFs are up and operational:

   `network interface show - vserver Cluster`

   Each cluster LIF should display true for `Is Home` and have a Status Admin/Oper of up/up.

Show example

```
cluster1::*> network interface show -vserver Cluster
            Logical     Status     Network            Current
Current Is
Vserver     Interface   Admin/Oper Address/Mask       Node
Port    Home
----------- ---------- ---------- ------------------ -------------
------- -----
Cluster
            node1_clus1  up/up    169.254.209.69/16  node1
e3a     true
            node1_clus2  up/up    169.254.49.125/16  node1
e3b     true
            node2_clus1  up/up    169.254.47.194/16  node2
e3a     true
            node2_clus2  up/up    169.254.19.183/16  node2
e3b     true
4 entries were displayed.
```

8. Verify that auto-revert is enabled on all cluster LIFs:

```
network interface show - vserver Cluster -fields auto-revert
```

Show example

```
cluster1::*> network interface show -vserver Cluster -fields auto-
revert
       Logical
Vserver   Interface     Auto-revert
--------- ------------- ------------
Cluster
          node1_clus1   true
          node1_clus2   true
          node2_clus1   true
          node2_clus2   true
4 entries were displayed.
```

9. Disconnect the cable from cluster port e3a on node1, and then connect e3a to port 1 on cluster switch cs1, using the appropriate cabling supported by the 9336C-FX2 switches.

   The NetApp Hardware Universe contains more information about cabling. See What additional information do I need to install my equipment that is not in HWU? for more information about switch installation

requirements.

10. Disconnect the cable from cluster port e3a on node2, and then connect e3a to port 2 on cluster switch cs1, using the appropriate cabling supported by the 9336C-FX2 switches.
11. Enable all node-facing ports on cluster switch cs1.

Show example

The following example shows that ports 1/1 through 1/34 are enabled on switch cs1:

```
cs1# config
Enter configuration commands, one per line. End with CNTL/Z.
cs1(config)# interface e1/1-34
cs1(config-if-range)# no shutdown
```

12. Verify that all cluster LIFs are **up**, operational, and display as true for `Is Home`:

`network interface show - vserver Cluster`

Show example

The following example shows that all the LIFs are **up** on node1 and node2 and that `Is Home` results are **true**:

```
cluster1::*> network interface show -vserver Cluster
          Logical      Status     Network            Current
Current Is
Vserver   Interface    Admin/Oper Address/Mask       Node
Port    Home
--------- ------------ ---------- ------------------ -----------
------- ----
Cluster
          node1_clus1  up/up      169.254.209.69/16  node1       e3a
true
          node1_clus2  up/up      169.254.49.125/16  node1       e3b
true
          node2_clus1  up/up      169.254.47.194/16  node2       e3a
true
          node2_clus2  up/up      169.254.19.183/16  node2       e3b
true
4 entries were displayed.
```

13. Display information about the status of the nodes in the cluster:

```
cluster show
```

Show example

The following example displays information about the health and eligibility of the nodes in the cluster:

```
cluster1::*> cluster show
Node                 Health  Eligibility   Epsilon
-------------------- ------- ------------  ------------
node1                true    true          false
node2                true    true          false
2 entries were displayed.
```

14. Disconnect the cable from cluster port e3b on node1, and then connect e3b to port 1 on cluster switch cs2, using the appropriate cabling supported by the 9336C-FX2 switches.
15. Disconnect the cable from cluster port e3b on node2, and then connect e3b to port 2 on cluster switch cs2, using the appropriate cabling supported by the 9336C-FX2 switches.
16. Enable all node-facing ports on cluster switch cs2.

Show example

The following example shows that ports 1/1 through 1/34 are enabled on switch cs2:

```
cs2# config
Enter configuration commands, one per line. End with CNTL/Z.
cs2(config)# interface e1/1-34
cs2(config-if-range)# no shutdown
```

17. Verify that all cluster ports are up:

```
network port show - ipspace Cluster
```

Show example

The following example shows that all the cluster ports are up on node1 and node2:

```
cluster1::*> network port show -ipspace Cluster

Node: node1

Ignore
                                                  Speed(Mbps)
Health   Health
Port      IPspace      Broadcast Domain Link MTU  Admin/Oper
Status   Status
--------- ------------ ---------------- ---- ---- ------------
-------- ------
e3a       Cluster      Cluster          up   9000  auto/100000
healthy  false
e3b       Cluster      Cluster          up   9000  auto/100000
healthy  false

Node: node2

Ignore
                                                  Speed(Mbps)
Health   Health
Port      IPspace      Broadcast Domain Link MTU  Admin/Oper
Status   Status
--------- ------------ ---------------- ---- ---- ------------
-------- ------
e3a       Cluster      Cluster          up   9000  auto/100000
healthy  false
e3b       Cluster      Cluster          up   9000  auto/100000
healthy  false
4 entries were displayed.
```

18. Verify that all interfaces display true for `Is Home`:

`network interface show - vserver Cluster`

This might take several minutes to complete.

Show example

The following example shows that all LIFs are **up** on node1 and node2 and that `Is Home` results are true:

```
cluster1::*> network interface show -vserver Cluster
          Logical      Status     Network            Current
Current Is
Vserver   Interface    Admin/Oper Address/Mask       Node       Port
Home
--------- ------------ ---------- ------------------ ----------
------- ----
Cluster
          node1_clus1  up/up      169.254.209.69/16  node1      e3a
true
          node1_clus2  up/up      169.254.49.125/16  node1      e3b
true
          node2_clus1  up/up      169.254.47.194/16  node2      e3a
true
          node2_clus2  up/up      169.254.19.183/16  node2      e3b
true
4 entries were displayed.
```

19. Verify that both nodes each have one connection to each switch:

```
show cdp neighbors
```

Show example

The following example shows the appropriate results for both switches:

```
cs1# show cdp neighbors
Capability Codes: R - Router, T - Trans-Bridge, B - Source-Route-
Bridge
                  S - Switch, H - Host, I - IGMP, r - Repeater,
                  V - VoIP-Phone, D - Remotely-Managed-Device,
                  s - Supports-STP-Dispute
Device-ID          Local Intrfce  Hldtme Capability  Platform
Port ID
node1              Eth1/1         133    H           AFFA400
e3a
node2              Eth1/2         133    H           AFFA400
e3a
cs2                Eth1/35        175    R S I s     N9K-C9336C
Eth1/35
cs2                Eth1/36        175    R S I s     N9K-C9336C
Eth1/36
Total entries displayed: 4
cs2# show cdp neighbors
Capability Codes: R - Router, T - Trans-Bridge, B - Source-Route-
Bridge
                  S - Switch, H - Host, I - IGMP, r - Repeater,
                  V - VoIP-Phone, D - Remotely-Managed-Device,
                  s - Supports-STP-Dispute
Device-ID          Local Intrfce  Hldtme Capability  Platform
Port ID
node1              Eth1/1         133    H           AFFA400
e3b
node2              Eth1/2         133    H           AFFA400
e3b
cs1                Eth1/35        175    R S I s     N9K-C9336C
Eth1/35
cs1                Eth1/36        175    R S I s     N9K-C9336C
Eth1/36
Total entries displayed: 4
```

20. Display information about the discovered network devices in your cluster:

```
network device-discovery show -protocol cdp
```

Show example

```
cluster1::*> network device-discovery show -protocol cdp
Node/       Local  Discovered
Protocol    Port   Device (LLDP: ChassisID)  Interface
Platform
----------- ------ ------------------------- ----------------
----------------
node2       /cdp
            e3a    cs1                       0/2               N9K-
C9336C
            e3b    cs2                       0/2               N9K-
C9336C

node1       /cdp
            e3a    cs1                       0/1               N9K-
C9336C
            e3b    cs2                       0/1               N9K-
C9336C
4 entries were displayed.
```

21. Verify that the storage configuration of HA pair 1 (and HA pair 2) is correct and error free:

```
system switch ethernet show
```

Show example

```
storage::*> system switch ethernet show
Switch                    Type                  Address
Model
------------------------- --------------------- ---------------
----------
sh1
                          storage-network       172.17.227.5
C9336C

       Serial Number: FOC221206C2
        Is Monitored: true
              Reason: None
    Software Version: Cisco Nexus Operating System (NX-OS) Software,
Version
                      9.3(5)
      Version Source: CDP
sh2
                          storage-network       172.17.227.6
C9336C
       Serial Number: FOC220443LZ
        Is Monitored: true
              Reason: None
    Software Version: Cisco Nexus Operating System (NX-OS) Software,
Version
                      9.3(5)
      Version Source: CDP
2 entries were displayed.
storage::*>
```

22. Verify that the settings are disabled:

```
network options switchless-cluster show
```

> It might take several minutes for the command to complete. Wait for the '3-minute lifetime to expire' announcement.

The `false` output in the following example shows that the configuration settings are disabled:

Show example

```
cluster1::*> network options switchless-cluster show
Enable Switchless Cluster: false
```

23. Verify the status of the node members in the cluster:

```
cluster show
```

Show example

The following example shows information about the health and eligibility of the nodes in the cluster:

```
cluster1::*> cluster show
Node                 Health  Eligibility   Epsilon
-------------------- ------- ------------  --------
node1                true    true          false
node2                true    true          false
```

24. Verify the connectivity of the remote cluster interfaces:

ONTAP 9.9.1 and later

You can use the `network interface check cluster-connectivity` command to start an accessibility check for cluster connectivity and then display the details:

`network interface check cluster-connectivity start` and `network interface check cluster-connectivity show`

```
cluster1::*> network interface check cluster-connectivity start
```

NOTE: Wait for a number of seconds before running the `show` command to display the details.

```
cluster1::*> network interface check cluster-connectivity show
                                  Source           Destination
Packet
Node   Date                       LIF              LIF
Loss
------ -------------------------- ---------------- ----------------
-----------
node1
       3/5/2022 19:21:18 -06:00   node1_clus2      node2-clus1
none
       3/5/2022 19:21:20 -06:00   node1_clus2      node2_clus2
none
node2
       3/5/2022 19:21:18 -06:00   node2_clus2      node1_clus1
none
       3/5/2022 19:21:20 -06:00   node2_clus2      node1_clus2
none
```

All ONTAP releases

For all ONTAP releases, you can also use the `cluster ping-cluster -node <name>` command to check the connectivity:

```
cluster ping-cluster -node <name>
```

```
cluster1::*> cluster ping-cluster -node local
Host is node2
Getting addresses from network interface table...
Cluster node1_clus1 169.254.209.69 node1 e3a
Cluster node1_clus2 169.254.49.125 node1 e3b
Cluster node2_clus1 169.254.47.194 node2 e3a
Cluster node2_clus2 169.254.19.183 node2 e3b
Local = 169.254.47.194 169.254.19.183
Remote = 169.254.209.69 169.254.49.125
Cluster Vserver Id = 4294967293
Ping status:....
Basic connectivity succeeds on 4 path(s)
Basic connectivity fails on 0 path(s)
................
Detected 9000 byte MTU on 4 path(s):
Local 169.254.47.194 to Remote 169.254.209.69
Local 169.254.47.194 to Remote 169.254.49.125
Local 169.254.19.183 to Remote 169.254.209.69
Local 169.254.19.183 to Remote 169.254.49.125
Larger than PMTU communication succeeds on 4 path(s)
RPC status:
2 paths up, 0 paths down (tcp check)
2 paths up, 0 paths down (udp check)
```

25. Change the privilege level back to admin:

```
set -privilege admin
```

Step 2: Set up the shared switch

The examples in this procedure use the following switch and node nomenclature:

- The names of the two shared switches are *sh1* and *sh2*.
- The nodes are *node1* and *node2*.

> The procedure requires the use of both ONTAP commands and Cisco Nexus 9000 Series Switches commands, ONTAP commands are used unless otherwise indicated.

1. Verify that the storage configuration of HA pair 1 (and HA pair 2) is correct and error free:

```
system switch ethernet show
```

Show example

```
storage::*> system switch ethernet show
Switch                    Type                  Address
Model
------------------------- --------------------  ---------------
-------
sh1
                          storage-network       172.17.227.5
C9336C

      Serial Number: FOC221206C2
       Is Monitored: true
             Reason: None
   Software Version: Cisco Nexus Operating System (NX-OS) Software,
Version
                     9.3(5)
     Version Source: CDP
sh2
                          storage-network       172.17.227.6
C9336C
       Serial Number: FOC220443LZ
        Is Monitored: true
              Reason: None
    Software Version: Cisco Nexus Operating System (NX-OS) Software,
Version
                      9.3(5)
      Version Source: CDP
2 entries were displayed.
storage::*>
```

2. Verify that the storage node ports are healthy and operational:

```
storage port show -port-type ENET
```

Show example

```
storage::*> storage port show -port-type ENET
                                    Speed
VLAN
Node    Port    Type    Mode        (Gb/s)      State      Status
ID
------- ------- ------- ---------- ----------- ---------- ----------
-----
node1
        e0c     ENET   storage          100      enabled  online
30
        e0d     ENET   storage          100      enabled  online
30
        e5a     ENET   storage          100      enabled  online
30
        e5b     ENET   storage          100      enabled  online
30

node2
        e0c     ENET  storage           100      enabled  online
30
        e0d     ENET  storage           100      enabled  online
30
        e5a     ENET  storage           100      enabled  online
30
        e5b     ENET  storage           100      enabled  online
30
```

3. Move the HA pair 1, NSM224 path A ports to sh1 port range 11-22.
4. Install a cable from HA pair 1, node1, path A to sh1 port range 11-22. For example, the path A storage port on an AFF A400 is e0c.
5. Install a cable from HA pair 1, node2, path A to sh1 port range 11-22.
6. Verify that the node ports are healthy and operational:

   ```
   storage port show -port-type ENET
   ```

Show example

```
storage::*> storage port show -port-type ENET
                                     Speed
VLAN
Node    Port    Type    Mode        (Gb/s)      State      Status
ID
------- ------- ------- ---------- ----------- ---------- ----------
-----
node1
        e0c     ENET   storage          100      enabled  online
30
        e0d     ENET   storage            0      enabled  offline
30
        e5a     ENET   storage            0      enabled  offline
30
        e5b     ENET   storage          100      enabled  online
30

node2
        e0c     ENET  storage           100      enabled  online
30
        e0d     ENET  storage             0      enabled  offline
30
        e5a     ENET  storage             0      enabled  offline
30
        e5b     ENET  storage           100      enabled  online
30
```

7. Check that there are no storage switch or cabling issues with the cluster:

   `system health alert show -instance`

   Show example

   ```
   storage::*> system health alert show -instance
   There are no entries matching your query.
   ```

8. Move the HA pair 1, NSM224 path B ports to sh2 port range 11-22.
9. Install a cable from HA pair 1, node1, path B to sh2 port range 11-22. For example, the path B storage port on an AFF A400 is e5b.
10. Install a cable from HA pair 1, node2, path B to sh2 port range 11-22.

11. Verify that the node ports are healthy and operational:

    `storage port show -port-type ENET`

    Show example

```
storage::*> storage port show -port-type ENET
                                   Speed
VLAN
Node    Port    Type    Mode       (Gb/s)      State      Status
ID
------- ------- ------- ---------- ----------- ---------- ----------
-----
node1
        e0c     ENET   storage          100      enabled  online
30
        e0d     ENET   storage            0      enabled  offline
30
        e5a     ENET   storage            0      enabled  offline
30
        e5b     ENET   storage          100      enabled  online
30

node2
        e0c     ENET  storage           100      enabled  online
30
        e0d     ENET  storage             0      enabled  offline
30
        e5a     ENET  storage             0      enabled  offline
30
        e5b     ENET  storage           100      enabled  online
30
```

12. Verify that the storage configuration of HA pair 1 is correct and error free:

    `system switch ethernet show`

Show example

```
storage::*> system switch ethernet show
Switch                    Type                  Address
Model
------------------------- --------------------- ----------------
----------
sh1
                          storage-network       172.17.227.5
C9336C

      Serial Number: FOC221206C2
       Is Monitored: true
             Reason: None
   Software Version: Cisco Nexus Operating System (NX-OS) Software,
Version
                     9.3(5)
     Version Source: CDP
sh2
                          storage-network       172.17.227.6
C9336C
      Serial Number: FOC220443LZ
       Is Monitored: true
             Reason: None
   Software Version: Cisco Nexus Operating System (NX-OS) Software,
Version
                     9.3(5)
     Version Source: CDP
2 entries were displayed.
storage::*>
```

13. Reconfigure the unused (controller) secondary storage ports on HA pair 1 from storage to networking. If more than one NS224 was direct attached, there will be ports that should be reconfigured.

Show example

```
storage port modify -node [node name] -port [port name] -mode
network
```

To place storage ports into a broadcast domain:

- `network port broadcast-domain create` (to create a new domain, if needed)
- `network port broadcast-domain add-ports` (to add ports to an existing domain)

14. If you suppressed automatic case creation, re-enable it by invoking an AutoSupport message:

```
system node autosupport invoke -node * -type all -message MAINT=END
```

What's next?

After you've migrated your switches, you can configure switch health monitoring.

Migrate from a switched configuration with direct-attached storage

You can migrate from a switched configuration with direct-attached storage by adding two new shared switches.

Supported switches

The following switches are supported:

- Nexus 9336C-FX2
- Nexus 3232C

The ONTAP and NX-OS versions supported in this procedure are on the Cisco Ethernet Switches page. See Cisco Ethernet switches.

Connection Ports

The switches use the following ports to connect to nodes:

- Nexus 9336C-FX2:
  - Ports 1- 3: Breakout mode (4x10G) Intra-Cluster Ports, int e1/1/1-4, e1/2/1-4, e1/3/1-4
  - Ports 4- 6: Breakout mode (4x25G) Intra-Cluster/HA Ports, int e1/4/1-4, e1/5/1-4, e1/6/1-4
  - Ports 7-34: 40/100GbE Intra-Cluster/HA Ports, int e1/7-34
- Nexus 3232C:
  - Ports 1-30: 10/40/100 GbE
- The switches use the following Inter-Switch Link (ISL) ports:
  - Ports int e1/35-36: Nexus 9336C-FX2
  - Ports e1/31-32: Nexus 3232C

The Hardware Universe contains information about supported cabling for all cluster switches.

What you'll need

- Make sure you completed the following tasks:
  - Configured some of the ports on Nexus 9336C-FX2 switches to run at 100 GbE.
  - Planned, migrated, and documented 100 GbE connectivity from nodes to Nexus 9336C-FX2 switches.
  - Migrated nondisruptively other Cisco cluster switches from an ONTAP cluster to Cisco Nexus 9336C-FX2 network switches.
- The existing switch network is properly set up and functioning.
- All ports are in the **up** state to ensure nondisruptive operations.
- The Nexus 9336C-FX2 switches are configured and operating under the proper version of NX-OS installed and reference configuration file (RCF) applied.

- The existing network configuration has the following:
  - A redundant and fully functional NetApp cluster using both older Cisco switches.
  - Management connectivity and console access to both the older Cisco switches and the new switches.
  - All cluster LIFs in the **up** state with the cluster LIFs are on their home ports.
  - ISL ports enabled and cabled between the other Cisco switches and between the new switches.

About the examples

The examples in this procedure use the following switch and node nomenclature:

- The existing Cisco Nexus 3232C cluster switches are *c1* and *c2*.
- The new Nexus 9336C-FX2 switches are *sh1* and *sh2*.
- The nodes are *node1* and *node2*.
- The cluster LIFs are *node1_clus1* and *node1_clus2* on node 1, and *node2_clus1* and *node2_clus2* on node 2 respectively.
- Switch c2 is replaced by switch sh2 first and then switch c1 is replaced by switch sh1.

Steps

1. If AutoSupport is enabled on this cluster, suppress automatic case creation by invoking an AutoSupport message:

   ```
   system node autosupport invoke -node * -type all -message MAINT=x h
   ```

   Where x is the duration of the maintenance window in hours.

2. Check the administrative and operational status of each cluster port.
3. Verify that all the cluster ports are up with a healthy status:

   ```
   network port show –role cluster
   ```

Show example

```
cluster1::*> network port show -role cluster
Node: node1

Ignore
                                                  Speed(Mbps)  Health
Health
Port    IPspace   Broadcast Domain Link MTU  Admin/Ope    Status
Status
------- --------- ---------------- ---- ---- ------------ --------
------
e3a     Cluster   Cluster          up   9000  auto/100000 healthy
false
e3b     Cluster   Cluster          up   9000  auto/100000 healthy
false

Node: node2

Ignore
                                                  Speed(Mbps) Health
Health
Port    IPspace   Broadcast Domain Link MTU  Admin/Oper  Status
Status
------- --------- ---------------- ---- ---- ----------- ---------
------
e3a     Cluster   Cluster          up   9000  auto/100000 healthy
false
e3b     Cluster   Cluster          up   9000  auto/100000 healthy
false
4 entries were displayed.
cluster1::*>
```

4. Verify that all the cluster interfaces (LIFs) are on the home port:

```
network interface show -role cluster
```

Show example

```
cluster1::*> network interface show -role cluster
         Logical     Status     Network           Current
Current Is
Vserver  Interface   Admin/Oper Address/Mask      Node        Port
Home
-------  ----------- ---------- ----------------- -----------
------- ----
Cluster
        node1_clus1  up/up      169.254.3.4/23    node1       e3a
true
        node1_clus2  up/up      169.254.3.5/23    node1       e3b
true
        node2_clus1  up/up      169.254.3.8/23    node2       e3a
true
        node2_clus2  up/up      169.254.3.9/23    node2       e3b
true
4 entries were displayed.
cluster1::*>
```

5. Verify that the cluster displays information for both cluster switches:

```
system cluster-switch show -is-monitoring-enabled-operational true
```

Show example

```
cluster1::*> system cluster-switch show -is-monitoring-enabled
-operational true
Switch                    Type               Address          Model
------------------------- ------------------ ---------------- ------
sh1                       cluster-network    10.233.205.90    N9K-
C9336C
     Serial Number: FOCXXXXXXGD
      Is Monitored: true
            Reason: None
  Software Version: Cisco Nexus Operating System (NX-OS) Software,
Version
                    9.3(5)
    Version Source: CDP
sh2                       cluster-network    10.233.205.91    N9K-
C9336C
     Serial Number: FOCXXXXXXGS
      Is Monitored: true
            Reason: None
  Software Version: Cisco Nexus Operating System (NX-OS) Software,
Version
                    9.3(5)
    Version Source: CDP
cluster1::*>
```

6. Disable auto-revert on the cluster LIFs.

Show example

```
cluster1::*> network interface modify -vserver Cluster -lif * -auto
-revert false
```

7. Shut down the c2 switch.

Show example

```
c2# configure terminal
Enter configuration commands, one per line. End with CNTL/Z.
c2(config)# interface ethernet <int range>
c2(config)# shutdown
```

8. Verify that the cluster LIFs have migrated to the ports hosted on cluster switch sh1:

   `network interface show -role cluster`

   This might take a few seconds.

   Show example

```
cluster1::*> network interface show -role cluster
          Logical     Status     Network         Current
Current  Is
Vserver   Interface   Admin/Oper Address/Mask    Node          Port
Home
--------- ----------- ---------- --------------- ------------
-------- -----
Cluster
          node1_clus1 up/up      169.254.3.4/23  node1         e3a
true
          node1_clus2 up/up      169.254.3.5/23  node1         e3a
false
          node2_clus1 up/up      169.254.3.8/23  node2         e3a
true
          node2_clus2 up/up      169.254.3.9/23  node2         e3a
false
4 entries were displayed.
cluster1::*>
```

9. Replace switch c2 with the new switch sh2 and re-cable the new switch.
10. Verify that the ports are back up on sh2. **Note** that the LIFs are still on switch c1.
11. Shut down the c1 switch.

Show example

```
c1# configure terminal
Enter configuration commands, one per line. End with CNTL/Z.
c1(config)# interface ethernet <int range>
c1(config)# shutdown
```

12. Verify that the cluster LIFs have migrated to the ports hosted on cluster switch sh2. This might take a few seconds.

Show example

```
cluster1::*> network interface show -role cluster
         Logical        Status     Network         Current   Current
Is
Vserver  Interface      Admin/Oper Address/Mask    Node      Port
Home
-------- -------------- ---------- --------------- --------- -------
----
Cluster
         node1_clus1    up/up      169.254.3.4/23  node1     e3a
true
         node1_clus2    up/up      169.254.3.5/23  node1     e3a
false
         node2_clus1    up/up      169.254.3.8/23  node2     e3a
true
         node2_clus2    up/up      169.254.3.9/23  node2     e3a
false
4 entries were displayed.
cluster1::*>
```

13. Replace switch c1 with the new switch sh1 and re-cable the new switch.
14. Verify that the ports are back up on sh1. **Note** that the LIFs are still on switch c2.
15. Enable auto-revert on the cluster LIFs:

Show example

```
cluster1::*> network interface modify -vserver Cluster -lif * -auto
-revert True
```

16. Verify that the cluster is healthy:

```
cluster show
```

Show example

```
cluster1::*> cluster show
Node                  Health  Eligibility   Epsilon
--------------------- ------- ------------- -------
node1                 true    true          false
node2                 true    true          false
2 entries were displayed.
cluster1::*>
```

What's next?

After you've migrated your switches, you can configure switch health monitoring.

Migrate from a switchless configuration with switch-attached storage by reusing the storage switches

You can migrate from a switchless configuration with switch-attached storage by reusing the storage switches.

By reusing the storage switches the storage switches of HA pair 1 become the shared switches as shown in the following figure.

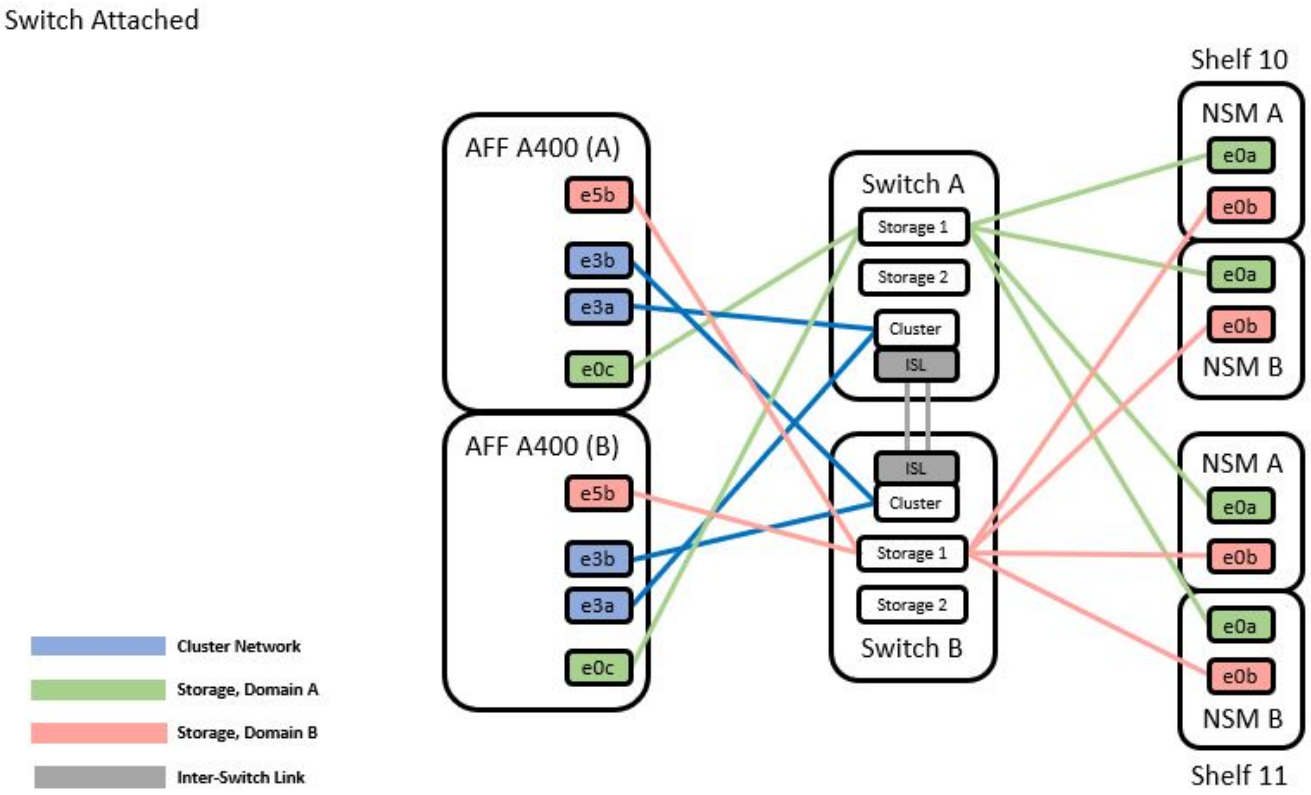

Steps

1. Verify that the storage configuration of HA pair 1 (and HA pair 2) is correct and error free:

   `system switch ethernet show`

   Show example

```
storage::*> system switch ethernet show
Switch                    Type                  Address
Model
------------------------- --------------------- ----------------
----------
sh1
                          storage-network       172.17.227.5
C9336C

    Serial Number: FOC221206C2
     Is Monitored: true
           Reason: none
 Software Version: Cisco Nexus Operating System (NX-OS) Software,
Version
                   9.3(5)
   Version Source: CDP
sh2
                        storage-network        172.17.227.6
C9336C
    Serial Number: FOC220443LZ
     Is Monitored: true
           Reason: None
 Software Version: Cisco Nexus Operating System (NX-OS) Software,
Version
                   9.3(5)
   Version Source: CDP
2 entries were displayed.
storage::*>
```

2. Verify that the node ports are healthy and operational:

   `storage port show -port-type ENET`

Show example

```
storage::*> storage port show -port-type ENET
                                     Speed
VLAN
Node    Port    Type    Mode        (Gb/s)    State     Status
ID
------- ------- ------- ---------- --------- --------- ---------
-----
node1
        e0c     ENET    storage           100 enabled   online
30
        e0d     ENET    storage           100 enabled   online
30
        e5a     ENET    storage           100 enabled   online
30
        e5b     ENET    storage           100 enabled   online
30

node2
        e0c     ENET    storage           100 enabled   online
30
        e0d     ENET    storage           100 enabled   online
30
        e5a     ENET    storage           100 enabled   online
30
        e5b     ENET    storage           100 enabled   online
30
```

3. Move the HA pair 1, NSM224 path A cables from storage switch A to the shared NS224 storage ports for HA pair 1, path A on storage switch A.
4. Move the cable from HA pair 1, node A, path A to the shared storage port for HA pair 1, node A on storage switch A.
5. Move the cable from HA pair 1, node B, path A to the shared storage port for HA pair 1, node B on storage switch A.
6. Verify the storage attached to HA pair 1, storage switch A is healthy:

   ```
   system health alert show -instance
   ```

Show example

```
storage::*> system health alert show -instance
There are no entries matching your query.
```

7. Replace the storage RCF on shared switch A with the shared RCF file. See Install the RCF on a Cisco Nexus 9336C-FX2 shared switch for further details.
8. Verify the storage attached to HA pair 1, storage switch B is healthy:

   `system health alert show -instance`

   Show example

   ```
   storage::*> system health alert show -instance
   There are no entries matching your query.
   ```

9. Move the HA pair 1, NSM224 path B cables from storage switch B to the shared NS224 storage ports for HA pair 1, path B to storage switch B.
10. Move the cable from HA pair 1, node A, path B to the shared storage port for HA pair 1, node A, path B on storage switch B.
11. Move the cable from HA pair 1, node B, path B to the shared storage port for HA pair 1, node B, path B on storage switch B.
12. Verify the storage attached to HA pair 1, storage switch B is healthy:

    `system health alert show -instance`

    Show example

    ```
    storage::*> system health alert show -instance
    There are no entries matching your query.
    ```

13. Replace the storage RCF file on shared switch B with the shared RCF file. See Install the RCF on a Cisco Nexus 9336C-FX2 shared switch for further details.
14. Verify the storage attached to HA pair 1, storage switch B is healthy:

    `system health alert show -instance`

Show example

```
storage::*> system health alert show -instance
There are no entries matching your query.
```

15. Install the ISLs between shared switch A and shared switch B:

Show example

```
sh1# configure
Enter configuration commands, one per line. End with CNTL/Z.
sh1 (config)# interface e1/35-36
sh1 (config-if-range)# no lldp transmit
sh1 (config-if-range)# no lldp receive
sh1 (config-if-range)# switchport mode trunk
sh1 (config-if-range)# no spanning-tree bpduguard enable
sh1 (config-if-range)# channel-group 101 mode active
sh1 (config-if-range)# exit
sh1 (config)# interface port-channel 101
sh1 (config-if)# switchport mode trunk
sh1 (config-if)# spanning-tree port type network
sh1 (config-if)# exit
sh1 (config)# exit
```

16. Convert HA pair 1 from a switchless cluster to a switched cluster. Use the cluster port assignments defined by the shared RCF. See Install NX-OS software and Reference Configuration Files (RCFs) for further details.
17. Verify that the switched networking configuration is valid:

```
network port show
```

What's next?

After you've migrated your switches, you can configure switch health monitoring.

Migrate from a switched cluster with switch-attached storage

You can migrate from a switched cluster with switch-attached storage by reusing the storage switches.

By reusing the storage switches the storage switches of HA pair 1 become the shared switches as shown in the following figure.

Switch Attached

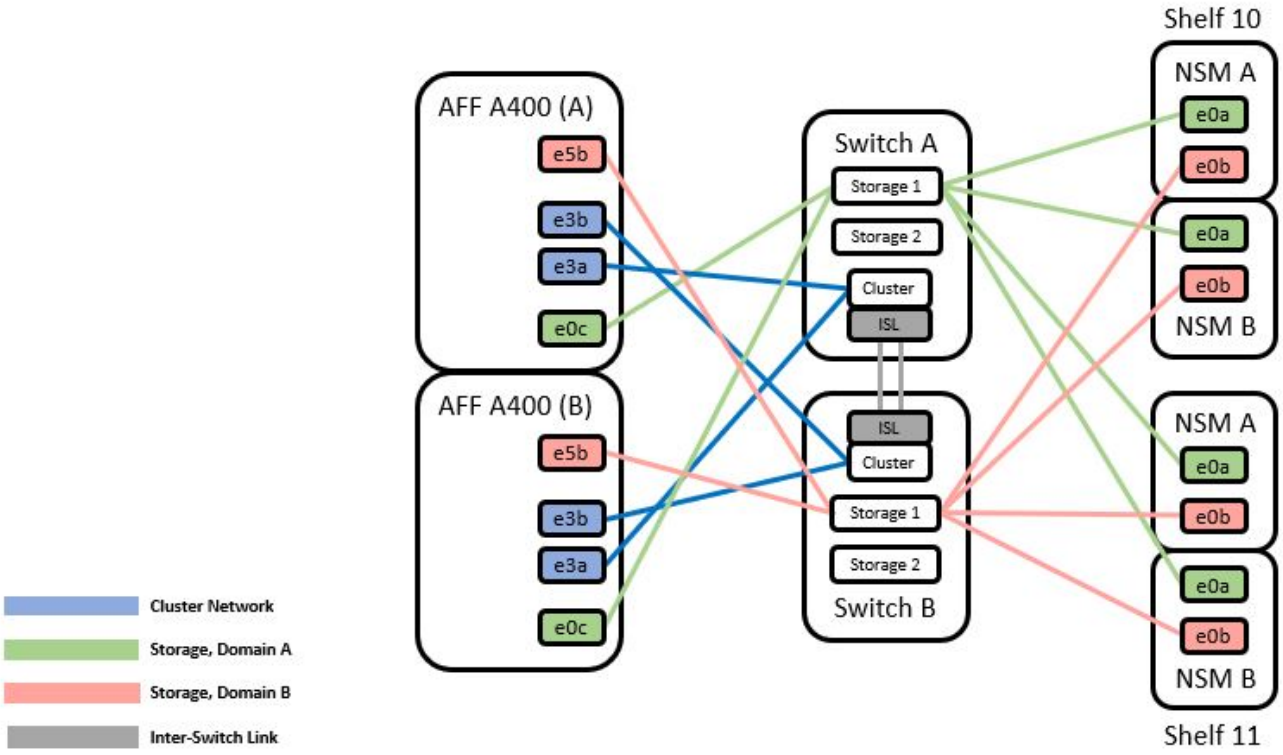

Steps

1. Verify that the storage configuration of HA pair 1 (and HA pair 2) is correct and error free:

   ```
   system switch ethernet show
   ```

Show example

```
storage::*> system switch ethernet show
Switch                    Type               Address          Model
------------------------- ------------------ ----------------
----------
sh1
                          storage-network    172.17.227.5     C9336C

     Serial Number: FOC221206C2
      Is Monitored: true
            Reason: None
  Software Version: Cisco Nexus Operating System (NX-OS) Software,
Version
                    9.3(5)
       Version Source: CDP
sh2
                          storage-network    172.17.227.6     C9336C
     Serial Number: FOC220443LZ
      Is Monitored: true
            Reason: None
  Software Version: Cisco Nexus Operating System (NX-OS) Software,
Version
                    9.3(5)
    Version Source: CDP
2 entries were displayed.
storage::*>
```

2. Move the HA pair 1, NSM224 path A cables from storage switch A to the NSM224 storage ports for HA pair 1, path A on storage switch A.
3. Move the cable from HA pair 1, node A, path A to the NSM224 storage port for HA pair 1, node A on storage switch A.
4. Move the cable from HA pair 1, node B, path A to the NSM224 storage port for HA pair 1, node B on storage switch A.
5. Verify the storage attached to HA pair 1, storage switch A is healthy:

   ```
   storage port show -port-type ENET
   ```

Show example

```
storage::*> storage port show -port-type ENET
                                     Speed
VLAN
Node     Port     Type     Mode        (Gb/s)        State     Status
ID
-------  -------  -------  ----------  ------------  --------- ---------
-----
node1
         e0c      ENET     storage             100  enabled   online
30
         e0d      ENET     storage             100  enabled   online
30
         e5a      ENET     storage             100  enabled   online
30
         e5b      ENET     storage             100  enabled   online
30

node2
         e0c      ENET     storage             100  enabled   online
30
         e0d      ENET     storage             100  enabled   online
30
         e5a      ENET     storage             100  enabled   online
30
         e5b      ENET     storage             100  enabled   online
30
```

6. Replace the storage RCF on shared switch A with the shared RCF file. See Install the RCF on a Cisco Nexus 9336C-FX2 shared switch for further details.
7. Verify the storage attached to HA pair 1, storage switch A is healthy:

   `system health alert show -instance`

   Show example

```
storage::*> system health alert show -instance
There are no entries matching your query.
```

8. Move the HA pair 1, NSM224 path B cables from storage switch B to the shared NS224 storage ports for HA pair 1, path B to storage switch B.

9. Move the cable from HA pair 1, node A, path B to the shared storage port for HA pair 1, node A, path B on storage switch B.
10. Move the cable from HA pair 1, node B, path B to the shared storage port for HA pair 1, node B, path B on storage switch B.
11. Verify the storage attached to HA pair 1, storage switch B is healthy:

    `system health alert show -instance`

    Show example

    ```
    storage::*> system health alert show -instance
    There are no entries matching your query.
    ```

12. Replace the storage RCF file on shared switch B with the shared RCF file. See Install the RCF on a Cisco Nexus 9336C-FX2 shared switch for further details.
13. Verify the storage attached to HA pair 1, storage switch B is healthy:

    `system health alert show -instance`

    Show example

    ```
    storage::*> system health alert show -instance
    There are no entries matching your query.
    ```

14. Verify the storage configuration of HA pair 1 is correct and error free:

    `system switch ethernet show`

Show example

```
storage::*> system switch ethernet show
Switch                    Type                  Address
Model
------------------------- ------------------- ----------------
----------
sh1
                          storage-network      172.17.227.5
C9336C

    Serial Number: FOC221206C2
     Is Monitored: true
           Reason: None
 Software Version: Cisco Nexus Operating System (NX-OS) Software,
Version
                   9.3(5)
   Version Source: CDP
sh2
                          storage-network      172.17.227.6
C9336C
    Serial Number: FOC220443LZ
     Is Monitored: true
           Reason: None
 Software Version: Cisco Nexus Operating System (NX-OS) Software,
Version
                   9.3(5)
   Version Source: CDP
2 entries were displayed.
storage::*>
```

15. Install the ISLs between shared switch A and shared switch B:

Show example

```
sh1# configure
Enter configuration commands, one per line. End with CNTL/Z.
sh1 (config)# interface e1/35-36*
sh1 (config-if-range)# no lldp transmit
sh1 (config-if-range)# no lldp receive
sh1 (config-if-range)# switchport mode trunk
sh1 (config-if-range)# no spanning-tree bpduguard enable
sh1 (config-if-range)# channel-group 101 mode active
sh1 (config-if-range)# exit
sh1 (config)# interface port-channel 101
sh1 (config-if)# switchport mode trunk
sh1 (config-if)# spanning-tree port type network
sh1 (config-if)# exit
sh1 (config)# exit
```

16. Migrate the cluster networking from the existing cluster switches to the shared switches using the switch replacement procedure and the shared RCF. The new shared switch A is "cs1". The new shared switch B is "cs2". See Replace a Cisco Nexus 9336C-FX2 shared switch and Install the RCF on a Cisco Nexus 9336C-FX2 shared switch for further details.
17. Verify that the switched networking config is valid:

    ```
    network port show
    ```

18. Remove the unused cluster switches.
19. Remove the unused storage switches.

What's next?

After you've migrated your switches, you can configure switch health monitoring.

Replace a Cisco Nexus 9336C-FX2 shared switch

You can replace a defective Nexus 9336C-FX2 shared switch. This is a nondisruptive procedure (NDU).

Before you begin

Before performing the switch replacement, make sure that:

- In the existing cluster and network infrastructure:
  - The existing cluster is verified as completely functional, with at least one fully connected cluster switch.
  - All cluster ports are **up**.
  - All cluster logical interfaces (LIFs) are **up** and on their home ports.
  - The ONTAP cluster ping-cluster -node node1 command must indicate that basic connectivity and larger than PMTU communication are successful on all paths.

- For the Nexus 9336C-FX2 replacement switch:
  - Management network connectivity on the replacement switch is functional.
  - Console access to the replacement switch is in place.
  - The node connections are ports 1/1 through 1/34:
  - All Inter-Switch Link (ISL) ports are disabled on ports 1/35 and 1/36.
  - The desired reference configuration file (RCF) and NX-OS operating system image switch is loaded onto the switch.
  - Any previous site customizations, such as STP, SNMP, and SSH, should be copied to the new switch.

About the examples

You must execute the command for migrating a cluster LIF from the node where the cluster LIF is hosted.

The examples in this procedure use the following switch and node nomenclature:

- The names of the existing Nexus 9336C-FX2 switches are *sh1* and *sh2*.
- The name of the new Nexus 9336C-FX2 switches are *newsh1* and *newsh2*.
- The node names are *node1* and *node2*.
- The cluster ports on each node are named *e3a* and *e3b*.
- The cluster LIF names are `node1_clus1` and `node1_clus2` for node1, and `node2_clus1` and `node2_clus2` for node2.
- The prompt for changes to all cluster nodes is cluster1::*>.

The following procedure is based on the following network topology:

Show example topology

```
cluster1::*> network port show -ipspace Cluster

Node: node1

Ignore
                                                  Speed(Mbps)  Health
Health
Port      IPspace      Broadcast Domain Link MTU  Admin/Oper   Status
Status
--------- ------------ ---------------- ---- ---- ------------ --------
------
e3a       Cluster      Cluster          up   9000  auto/100000 healthy
false
e3b       Cluster      Cluster          up   9000  auto/100000 healthy
false

Node: node2

Ignore
                                                  Speed(Mbps)  Health
Health
Port      IPspace      Broadcast Domain Link MTU  Admin/Oper   Status
Status
--------- ------------ ---------------- ---- ---- ------------ --------
------
e3a       Cluster      Cluster          up   9000  auto/100000 healthy
false
e3b       Cluster      Cluster          up   9000  auto/100000 healthy
false
4 entries were displayed.


cluster1::*> network interface show -vserver Cluster
            Logical    Status     Network            Current
Current Is
Vserver     Interface  Admin/Oper Address/Mask       Node          Port
Home
----------- ---------- ---------- ------------------ -------------
------- ----
Cluster
            node1_clus1  up/up    169.254.209.69/16  node1         e3a
true
            node1_clus2  up/up    169.254.49.125/16  node1         e3b
true
```

```
            node2_clus1  up/up    169.254.47.194/16  node2         e3a
true
            node2_clus2  up/up    169.254.19.183/16  node2         e3b
true
4 entries were displayed.

cluster1::*> network device-discovery show -protocol cdp
Node/       Local  Discovered
Protocol    Port   Device (LLDP: ChassisID)  Interface         Platform
----------- ------ ------------------------- ----------------
----------------
node2      /cdp
            e3a    sh1                       Eth1/2            N9K-
C9336C
            e3b    sh2                       Eth1/2            N9K-
C9336C

node1      /cdp
            e3a    sh1                       Eth1/1            N9K-
C9336C
            e3b    sh2                       Eth1/1            N9K-
C9336C
4 entries were displayed.

sh1# show cdp neighbors
Capability Codes: R - Router, T - Trans-Bridge, B - Source-Route-Bridge
                  S - Switch, H - Host, I - IGMP, r - Repeater,
                  V - VoIP-Phone, D - Remotely-Managed-Device,
                  s - Supports-STP-Dispute
Device-ID          Local Intrfce  Hldtme Capability  Platform      Port
ID
node1              Eth1/1         144    H           FAS2980       e3a
node2              Eth1/2         145    H           FAS2980       e3a
sh2                Eth1/35        176    R S I s     N9K-C9336C
Eth1/35
sh2 (FDO220329V5)   Eth1/36       176    R S I s     N9K-C9336C
Eth1/36
Total entries displayed: 4

sh2# show cdp neighbors
Capability Codes: R - Router, T - Trans-Bridge, B - Source-Route-Bridge
                  S - Switch, H - Host, I - IGMP, r - Repeater,
                  V - VoIP-Phone, D - Remotely-Managed-Device,
                  s - Supports-STP-Dispute
Device-ID          Local Intrfce  Hldtme Capability  Platform      Port
ID
```

```
node1                Eth1/1          139    H           FAS2980       eb
node2                Eth1/2          124    H           FAS2980       eb
sh1                  Eth1/35         178    R S I s     N9K-C9336C
Eth1/35
sh1                  Eth1/36         178    R S I s     N9K-C9336C
Eth1/36
Total entries displayed: 4
```

Steps

1. If AutoSupport is enabled on this cluster, suppress automatic case creation by invoking an AutoSupport message:

   ```
   system node autosupport invoke -node * -type all -message MAINT=xh
   ```

   Where x is the duration of the maintenance window in hours.

2. Optional: Install the appropriate RCF and image on the switch, newsh2, and make any necessary site preparations.
   a. If necessary, verify, download, and install the appropriate versions of the RCF and NX-OS software for the new switch. If you have verified that the new switch is correctly set up and does not need updates to the RCF and NX-OS software, continue to Step 3.
   b. Go to the NetApp Cluster and Management Network Switches Reference Configuration File Description Page on the NetApp Support Site.
   c. Click the link for the Cluster Network and Management Network Compatibility Matrix, and then note the required switch software version.
   d. Click your browser's back arrow to return to the Description page, click CONTINUE, accept the license agreement, and then go to the Download page.
   e. Follow the steps on the Download page to download the correct RCF and NX-OS files for the version of ONTAP software you are installing.
3. On the new switch, log in as admin and shut down all the ports that will be connected to the node cluster interfaces (ports 1/1 to 1/34).
   If the switch that you are replacing is not functional and is powered down, go to Step 4. The LIFs on the cluster nodes should have already failed over to the other cluster port for each node.

   Show example

   ```
   newsh2# config
   Enter configuration commands, one per line. End with CNTL/Z.
   newsh2(config)# interface e1/1-34
   newsh2(config-if-range)# shutdown
   ```

4. Verify that all cluster LIFs have auto-revert enabled.

   ```
   network interface show - vserver Cluster -fields auto-revert
   ```

Show example

```
cluster1::> network interface show -vserver Cluster -fields auto-
revert
             Logical
Vserver      Interface     Auto-revert
------------ ------------- -------------
Cluster      node1_clus1   true
Cluster      node1_clus2   true
Cluster      node2_clus1   true
Cluster      node2_clus2   true
4 entries were displayed.
```

5. Verify the connectivity of the remote cluster interfaces:

ONTAP 9.9.1 and later

You can use the `network interface check cluster-connectivity` command to start an accessibility check for cluster connectivity and then display the details:

`network interface check cluster-connectivity start` and `network interface check cluster-connectivity show`

```
cluster1::*> network interface check cluster-connectivity start
```

NOTE: Wait for a number of seconds before running the `show` command to display the details.

```
cluster1::*> network interface check cluster-connectivity show
                                  Source           Destination
Packet
Node   Date                       LIF              LIF
Loss
------ -------------------------- ---------------- ----------------
-----------
node1
       3/5/2022 19:21:18 -06:00   node1_clus2      node2-clus1
none
       3/5/2022 19:21:20 -06:00   node1_clus2      node2_clus2
none
node2
       3/5/2022 19:21:18 -06:00   node2_clus2      node1_clus1
none
       3/5/2022 19:21:20 -06:00   node2_clus2      node1_clus2
none
```

All ONTAP releases

For all ONTAP releases, you can also use the `cluster ping-cluster -node <name>` command to check the connectivity:

```
cluster ping-cluster -node <name>
```

```
cluster1::*> cluster ping-cluster -node local
Host is node2
Getting addresses from network interface table...
Cluster node1_clus1 169.254.209.69 node1 e3a
Cluster node1_clus2 169.254.49.125 node1 e3b
Cluster node2_clus1 169.254.47.194 node2 e3a
Cluster node2_clus2 169.254.19.183 node2 e3b
Local = 169.254.47.194 169.254.19.183
Remote = 169.254.209.69 169.254.49.125
Cluster Vserver Id = 4294967293
Ping status:
....
Basic connectivity succeeds on 4 path(s)
Basic connectivity fails on 0 path(s)
................
Detected 9000 byte MTU on 4 path(s):
Local 169.254.47.194 to Remote 169.254.209.69
Local 169.254.47.194 to Remote 169.254.49.125
Local 169.254.19.183 to Remote 169.254.209.69
Local 169.254.19.183 to Remote 169.254.49.125
Larger than PMTU communication succeeds on 4 path(s)
RPC status:
2 paths up, 0 paths down (tcp check)
2 paths up, 0 paths down (udp check)
```

6. Shut down the ISL ports 1/35 and 1/36 on the Nexus 9336C-FX2 switch sh1.

Show example

```
sh1# configure
Enter configuration commands, one per line. End with CNTL/Z.
sh1(config)# interface e1/35-36
sh1(config-if-range)# shutdown
```

7. Remove all the cables from the Nexus 9336C-FX2 sh2 switch, and then connect them to the same ports on the Nexus C9336C-FX2 newsh2 switch.
8. Bring up the ISLs ports 1/35 and 1/36 between the sh1 and newsh2 switches, and then verify the port channel operation status.

   Port-Channel should indicate Po1(SU) and Member Ports should indicate Eth1/35(P) and Eth1/36(P).

Show example

This example enables ISL ports 1/35 and 1/36 and displays the port channel summary on switch sh1.

```
sh1# configure
Enter configuration commands, one per line. End with CNTL/Z.
sh1 (config)# int e1/35-36
sh1 (config-if-range)# no shutdown
sh1 (config-if-range)# show port-channel summary
Flags:  D - Down        P - Up in port-channel (members)
        I - Individual  H - Hot-standby (LACP only)
        s - Suspended   r - Module-removed
        b - BFD Session Wait
        S - Switched    R - Routed
        U - Up (port-channel)
        p - Up in delay-lacp mode (member)
        M - Not in use. Min-links not met
--------------------------------------------------------------------------
------------
Group Port-       Type     Protocol  Member       Ports
      Channel
--------------------------------------------------------------------------
------------
1     Po1(SU)     Eth      LACP      Eth1/35(P)   Eth1/36(P)

sh1 (config-if-range)#
```

9. Verify that port e3b is up on all nodes:

```
network port show ipspace Cluster
```

Show example

The output should be like the following:

```
cluster1::*> network port show -ipspace Cluster

Node: node1

Ignore
                                                  Speed(Mbps)
Health   Health
Port      IPspace      Broadcast Domain Link MTU   Admin/Oper
Status   Status
--------- ------------ ---------------- ---- ----- ---------- - -
-------- ----
e3a       Cluster      Cluster          up   9000  auto/100000
healthy  false
e3b       Cluster      Cluster          up   9000  auto/100000
healthy  false

Node: node2

Ignore
                                                  Speed(Mbps)
Health   Health
Port      IPspace      Broadcast Domain Link MTU   Admin/Oper
Status   Status
--------- ------------ ---------------- ---- ----- ----------- -
-------- ----
e3a       Cluster      Cluster          up   9000  auto/100000
healthy  false
e3b       Cluster      Cluster          up   9000  auto/auto    -
false
4 entries were displayed.
```

10. On the same node you used in the previous step, revert the cluster LIF associated with the port in the previous step by using the network interface revert command.

    In this example, LIF node1_clus2 on node1 is successfully reverted if the Home value is true and the port is e3b.

    The following commands return LIF node1_clus2 on node1 to home port e3a and displays information about the LIFs on both nodes. Bringing up the first node is successful if the Is Home column is **true** for both cluster interfaces and they show the correct port assignments, in this example e3a and e3b on node1.

Show example

```
cluster1::*> network interface show -vserver Cluster

            Logical      Status     Network            Current
Current Is
Vserver     Interface    Admin/Oper Address/Mask       Node
Port    Home
----------- ------------ ---------- ------------------ ----------
------- -----
Cluster
            node1_clus1  up/up      169.254.209.69/16  node1
e3a     true
            node1_clus2  up/up      169.254.49.125/16  node1
e3b     true
            node2_clus1  up/up      169.254.47.194/16  node2
e3a     true
            node2_clus2  up/up      169.254.19.183/16  node2
e3a     false
4 entries were displayed.
```

11. Display information about the nodes in a cluster:

```
cluster show
```

Show example

This example shows that the node health for node1 and node2 in this cluster is true:

```
cluster1::*> cluster show
Node          Health  Eligibility
------------- ------- ------------
node1         false   true
node2         true    true
```

12. Verify that all physical cluster ports are up:

```
network port show ipspace Cluster
```

Show example

```
cluster1::*> network port show -ipspace Cluster

Node node1
Ignore
                                                        Speed(Mbps)
Health   Health
Port      IPspace     Broadcast Domain  Link  MTU   Admin/Oper
Status   Status
--------- ----------- ----------------- ----- ----- ------------
-------- ------
e3a       Cluster     Cluster           up    9000  auto/100000
healthy  false
e3b       Cluster     Cluster           up    9000  auto/100000
healthy  false

Node: node2

Ignore
                                                        Speed(Mbps)
Health   Health
Port      IPspace      Broadcast Domain Link  MTU   Admin/Oper
Status   Status
--------- ------------ ---------------- ----- ----- ------------
-------- ------
e3a       Cluster      Cluster          up    9000  auto/100000
healthy  false
e3b       Cluster      Cluster          up    9000  auto/100000
healthy  false
4 entries were displayed.
```

13. Verify the connectivity of the remote cluster interfaces:

ONTAP 9.9.1 and later

You can use the `network interface check cluster-connectivity` command to start an accessibility check for cluster connectivity and then display the details:

`network interface check cluster-connectivity start` and `network interface check cluster-connectivity show`

```
cluster1::*> network interface check cluster-connectivity start
```

NOTE: Wait for a number of seconds before running the `show` command to display the details.

```
cluster1::*> network interface check cluster-connectivity show
                                  Source           Destination
Packet
Node   Date                       LIF              LIF
Loss
------ -------------------------- ---------------- ----------------
-----------
node1
       3/5/2022 19:21:18 -06:00   node1_clus2      node2-clus1
none
       3/5/2022 19:21:20 -06:00   node1_clus2      node2_clus2
none
node2
       3/5/2022 19:21:18 -06:00   node2_clus2      node1_clus1
none
       3/5/2022 19:21:20 -06:00   node2_clus2      node1_clus2
none
```

All ONTAP releases

For all ONTAP releases, you can also use the `cluster ping-cluster -node <name>` command to check the connectivity:

```
cluster ping-cluster -node <name>
```

```
cluster1::*> cluster ping-cluster -node local
Host is node2
Getting addresses from network interface table...
Cluster node1_clus1 169.254.209.69 node1 e3a
Cluster node1_clus2 169.254.49.125 node1 e3b
Cluster node2_clus1 169.254.47.194 node2 e3a
Cluster node2_clus2 169.254.19.183 node2 e3b
Local = 169.254.47.194 169.254.19.183
Remote = 169.254.209.69 169.254.49.125
Cluster Vserver Id = 4294967293
Ping status:
....
Basic connectivity succeeds on 4 path(s)
Basic connectivity fails on 0 path(s)
................
Detected 9000 byte MTU on 4 path(s):
Local 169.254.47.194 to Remote 169.254.209.69
Local 169.254.47.194 to Remote 169.254.49.125
Local 169.254.19.183 to Remote 169.254.209.69
Local 169.254.19.183 to Remote 169.254.49.125
Larger than PMTU communication succeeds on 4 path(s)
RPC status:
2 paths up, 0 paths down (tcp check)
2 paths up, 0 paths down (udp check)
```

14. Confirm the following cluster network configuration:

```
network port show
```

Show example

```
cluster1::*> network port show -ipspace Cluster

Node: node1

Ignore
                                        Speed(Mbps)
Health   Health
Port      IPspace     Broadcast Domain Link MTU   Admin/Oper
Status   Status
--------- ----------- ---------------- ---- ----- ------------
-------- ------
e3a       Cluster     Cluster          up   9000  auto/100000
healthy  false
e3b       Cluster     Cluster          up   9000  auto/100000
healthy  false

Node: node2

Ignore
                                         Speed(Mbps)
Health   Health
Port      IPspace      Broadcast Domain Link MTU  Admin/Oper
Status   Status
--------- ------------ ---------------- ---- ---- ------------
-------- ------
e3a       Cluster      Cluster          up   9000 auto/100000
healthy  false
e3b       Cluster      Cluster          up   9000 auto/100000
healthy  false
4 entries were displayed.

cluster1::*> network interface show -vserver Cluster
            Logical    Status     Network            Current
Current Is
Vserver     Interface  Admin/Oper Address/Mask       Node
Port    Home
----------- ---------- ---------- ------------------ -------------
------- ----
Cluster
            node1_clus1  up/up    169.254.209.69/16  node1
e3a     true
            node1_clus2  up/up    169.254.49.125/16  node1
e3b     true
            node2_clus1  up/up    169.254.47.194/16  node2
```

```
e3a     true
            node2_clus2  up/up    169.254.19.183/16  node2
e3b     true
4 entries were displayed.

cluster1::> network device-discovery show -protocol cdp
Node/       Local  Discovered
Protocol    Port   Device (LLDP: ChassisID)  Interface
Platform
----------- ------ ------------------------ ----------------
----------------
node2      /cdp
            e3a    sh1    0/2               N9K-C9336C
            e3b    newsh2                    0/2               N9K-
C9336C
node1      /cdp
            e3a    sh1                       0/1               N9K-
C9336C
            e3b    newsh2                    0/1               N9K-
C9336C
4 entries were displayed.

sh1# show cdp neighbors
Capability Codes: R - Router, T - Trans-Bridge, B - Source-Route-
Bridge
                  S - Switch, H - Host, I - IGMP, r - Repeater,
                  V - VoIP-Phone, D - Remotely-Managed-Device,
                  s - Supports-STP-Dispute
Device-ID            Local Intrfce  Hldtme Capability  Platform
Port ID
node1                Eth1/1         144    H           FAS2980
e3a
node2                Eth1/2         145    H           FAS2980
e3a
newsh2               Eth1/35        176    R S I s     N9K-C9336C
Eth1/35
newsh2               Eth1/36        176    R S I s     N9K-C9336C
Eth1/36
Total entries displayed: 4

sh2# show cdp neighbors
Capability Codes: R - Router, T - Trans-Bridge, B - Source-Route-
Bridge
                  S - Switch, H - Host, I - IGMP, r - Repeater,
                  V - VoIP-Phone, D - Remotely-Managed-Device,
                  s - Supports-STP-Dispute
```

```
Device-ID          Local Intrfce  Hldtme Capability  Platform
Port ID
node1              Eth1/1         139    H           FAS2980
e3b
node2              Eth1/2         124    H           FAS2980
eb
sh1                Eth1/35        178    R S I s     N9K-C9336C
Eth1/35
sh1                Eth1/36        178    R S I s     N9K-C9336C
Eth1/36
Total entries displayed: 4
```

15. Move the storage ports from the old switch sh2 to the new switch newsh2.
16. Verify the storage attached to HA pair 1, shared switch newsh2 is healthy.
17. Verify the storage attached to HA pair 2, shared switch newsh2 is healthy:

```
storage port show -port-type ENET
```

Show example

```
storage::*> storage port show -port-type ENET
                                     Speed
VLAN
Node    Port    Type    Mode        (Gb/s)      State     Status
ID
------- ------- ------- ---------- ----------- --------- ---------
-----
node1
        e3a     ENET    storage           100   enabled   online
30
        e3b     ENET    storage             0   enabled   offline
30
        e7a     ENET    storage             0   enabled   offline
30
        e7b     ENET    storage           100   enabled   online
30

node2
        e3a     ENET    storage           100   enabled   online
30
        e3b     ENET    storage             0   enabled   offline
30
        e7a     ENET    storage             0   enabled   offline
30
        e7b     ENET    storage           100   enabled   online
30
```

18. Verify that the shelves are correctly cabled:

```
storage shelf port show -fields remote- device,remote-port
```

Show example

```
cluster1::*> storage shelf port show -fields remote-device,remote-
port
shelf id remote-port  remote-device
----- -- ------------ ----------------------------
3.20  0  Ethernet1/13 sh1
3.20  1  Ethernet1/13 newsh2
3.20  2  Ethernet1/14 sh1
3.20  3  Ethernet1/14 newsh2
3.30  0  Ethernet1/15 sh1
3.30  1  Ethernet1/15 newsh2
3.30  2  Ethernet1/16 sh1
3.30  3  Ethernet1/16 newsh2
8 entries were displayed.
```

19. Remove the old switch sh2.
20. Repeat these steps for the switch sh1 and new switch newsh1.
21. If you suppressed automatic case creation, reenable it by invoking an AutoSupport message:

```
system node autosupport invoke -node * -type all -message MAINT=END
```

What's next?

After you've replaced your switches, you can configure switch health monitoring.

Monitor switch health

Overview of switch health monitor

The Ethernet switch health monitor (CSHM) is responsible for ensuring the operational health of Cluster and Storage network switches and collecting switch logs for debugging purposes.

Configure switch health monitoring

Configuration overview

The Ethernet switch health monitor (CSHM) is responsible for ensuring the operational health of Cluster and Storage network switches and collecting switch logs for debugging purposes.

- Configure log collection
- Configure SNMPv3 (Optional)

Configure log collection

The Ethernet switch health monitor (CSHM) is responsible for ensuring the operational health of Cluster and Storage network switches and collecting switch logs for debugging purposes. This procedure guides you through the process of setting up collection, requesting detailed **Support** logs, and enabling an hourly collection of **Periodic** data that is collected by AutoSupport.

NOTE: If you enable FIPS mode, you must complete the following:

1. Regenerate SSH keys on the switch using the vendor instructions.
2. Regenerate SSH keys in ONTAP using `debug system regenerate-systemshell-key-pair`
3. Re-run log collection setup routine using the `system switch ethernet log setup-password` command

Before you begin

- The user must have access to the switch `show` commands. If these are not available, create a new user and grant the necessary permissions to the user.
- Switch health monitoring must be enabled for the switch. Verify this by ensuring the `Is Monitored:` field is set to **true** in the output of the `system switch ethernet show` command.
- For log collection with Broadcom and Cisco switches:
  - The local user must have network admin privileges.
  - A new user should be created on the switch for each cluster setup with log collection enabled. These switches do not support multiple SSH keys for the same user. Any additional log collection setup

performed overwrites any pre-existing SSH keys for the user.

- For support log collection with NVIDIA switches, the *user* for log collection must be permitted to run the `cl-support` command without having to provide a password. To allow this usage, run the command:

  ```
  echo '<user> ALL = NOPASSWD: /usr/cumulus/bin/cl-support' | sudo EDITOR='tee
  -a' visudo -f /etc/sudoers.d/cumulus
  ```

Steps

ONTAP 9.15.1 and later

1. To set up log collection, run the following command for each switch. You are prompted to enter the switch name, username, and password for log collection.

   NOTE: If answering **y** to the user specification prompt, make sure that the user has the necessary permissions as outlined in Before you begin.

```
system switch ethernet log setup-password
```

```
cluster1::*> system switch ethernet log setup-password
Enter the switch name: <return>
The switch name entered is not recognized.
Choose from the following list:
cs1
cs2

cluster1::*> system switch ethernet log setup-password

Enter the switch name: cs1
Would you like to specify a user other than admin for log
collection? {y|n}: n

Enter the password: <enter switch password>
Enter the password again: <enter switch password>

cluster1::*> system switch ethernet log setup-password

Enter the switch name: cs2

Would you like to specify a user other than admin for log
collection? {y|n}: n

Enter the password: <enter switch password>
Enter the password again: <enter switch password>
```

   For CL 5.11.1, create the user **cumulus** and respond **y** to the following prompt: Would you like to specify a user other than admin for log collection? {y|n}: **y**

2. Enable periodic log collection:

```
system switch ethernet log modify -device <switch-name> -periodic
-enabled true
```

```
cluster1::*> system switch ethernet log modify -device cs1 -periodic
-enabled true

Do you want to modify the cluster switch log collection
configuration? {y|n}: [n] y

cs1: Periodic log collection has been scheduled to run every hour.

cluster1::*> system switch ethernet log modify -device cs2 -periodic
-enabled true

Do you want to modify the cluster switch log collection
configuration? {y|n}: [n] y

cs2: Periodic log collection has been scheduled to run every hour.

cluster1::*> system switch ethernet log show
                                          Periodic    Periodic
Support
Switch                                    Log Enabled Log State
Log State

cs1                                       true        scheduled
never-run
cs2                                       true        scheduled
never-run
2 entries were displayed.
```

3. Request support log collection:

```
system switch ethernet log collect-support-log -device <switch-name>
```

```
cluster1::*> system switch ethernet log collect-support-log -device
cs1

cs1: Waiting for the next Ethernet switch polling cycle to begin
support collection.

cluster1::*> system switch ethernet log collect-support-log -device
cs2

cs2: Waiting for the next Ethernet switch polling cycle to begin
support collection.

cluster1::*> *system switch ethernet log show
                                          Periodic    Periodic
Support
Switch                                    Log Enabled Log State
Log State

cs1                                       false       halted
initiated
cs2                                       true        scheduled
initiated
2 entries were displayed.
```

4. To view all details of log collection, including the enablement, status message, previous timestamp and filename of periodic collection, the request status, status message, and previous timestamp and filename of support collection, use the following:

```
system switch ethernet log show -instance
```

```
cluster1::*> system switch ethernet log show -instance

                    Switch Name: cs1
           Periodic Log Enabled: true
            Periodic Log Status: Periodic log collection has been
scheduled to run every hour.
    Last Periodic Log Timestamp: 3/11/2024 11:02:59
          Periodic Log Filename: cluster1:/mroot/etc/log/shm-
cluster-info.tgz
          Support Log Requested: false
             Support Log Status: Successfully gathered support logs
- see filename for their location.
     Last Support Log Timestamp: 3/11/2024 11:14:20
           Support Log Filename: cluster1:/mroot/etc/log/shm-
cluster-log.tgz

                    Switch Name: cs2
           Periodic Log Enabled: false
            Periodic Log Status: Periodic collection has been
halted.
    Last Periodic Log Timestamp: 3/11/2024 11:05:18
          Periodic Log Filename: cluster1:/mroot/etc/log/shm-
cluster-info.tgz
          Support Log Requested: false
             Support Log Status: Successfully gathered support logs
- see filename for their location.
     Last Support Log Timestamp: 3/11/2024 11:18:54
           Support Log Filename: cluster1:/mroot/etc/log/shm-
cluster-log.tgz
2 entries were displayed.
```

ONTAP 9.14.1 and earlier

1. To set up log collection, run the following command for each switch. You are prompted to enter the switch name, username, and password for log collection.

   NOTE: If answering `y` to the user specification prompt, make sure that the user has the necessary permissions as outlined in Before you begin.

```
system switch ethernet log setup-password
```

```
cluster1::*> system switch ethernet log setup-password
Enter the switch name: <return>
The switch name entered is not recognized.
Choose from the following list:
cs1
cs2

cluster1::*> system switch ethernet log setup-password

Enter the switch name: cs1
Would you like to specify a user other than admin for log
collection? {y|n}: n

Enter the password: <enter switch password>
Enter the password again: <enter switch password>

cluster1::*> system switch ethernet log setup-password

Enter the switch name: cs2

Would you like to specify a user other than admin for log
collection? {y|n}: n

Enter the password: <enter switch password>
Enter the password again: <enter switch password>
```

For CL 5.11.1, create the user **cumulus** and respond **y** to the following prompt: Would you like to specify a user other than admin for log collection? {y|n}: **y**

2. To request support log collection and enable periodic collection, run the following command. This starts both types of log collection: the detailed `Support` logs and an hourly collection of `Periodic` data.

```
system switch ethernet log modify -device <switch-name> -log-request
true
```

```
cluster1::*> system switch ethernet log modify -device cs1 -log
-request true

Do you want to modify the cluster switch log collection
configuration? {y|n}: [n] y

Enabling cluster switch log collection.

cluster1::*> system switch ethernet log modify -device cs2 -log
-request true

Do you want to modify the cluster switch log collection
configuration? {y|n}: [n] y

Enabling cluster switch log collection.
```

Wait for 10 minutes and then check that the log collection completes:

```
system switch ethernet log show
```

If any error statuses are reported by the log collection feature (visible in the output of `system switch ethernet log show`), see Troubleshoot log collection for further details.

What's next?

Configure SNMPv3 (Optional).

Configure SNMPv3 for your switch (Optional)

SNMP is used to monitor the switches. Monitoring by SNMPv3 is configured by following this procedure.

The Ethernet Switch Health Monitor (CSHM) utilizes SNMP to monitor the health and performance of cluster and storage switches. By default, SNMPv2c is configured automatically through the Reference Configuration File (RCF). SNMPv3 is more secure than SNMPv2 because it introduces robust security features such as authentication, encryption, and message integrity, which protect against unauthorized access and ensure data confidentiality and integrity during transmission.

- SNMPv3 is only supported on ONTAP 9.12.1 and later.
- ONTAP 9.13.1P12, 9.14.1P9, 9.15.1P5, 9.16.1 and later versions fix these two issues:
  - For ONTAP health monitoring of Cisco switches, SNMPv2 traffic might still be seen after switching to SNMPv3 for monitoring
  - False-positive switch fan and power alerts when SNMP failures occur

About this task

The following commands are used to configure an SNMPv3 username on **Broadcom**, **Cisco**, and **NVIDIA** switches:

Broadcom switches

Configure an SNMPv3 username NETWORK-OPERATOR on Broadcom BES-53248 switches.

- For **no authentication**:

```
snmp-server user SNMPv3UserNoAuth NETWORK-OPERATOR noauth
```

- For **MD5/SHA authentication**:

```
snmp-server user SNMPv3UserAuth NETWORK-OPERATOR [auth-md5|auth-sha]
```

- For **MD5/SHA authentication with AES/DES encryption**:

```
snmp-server user SNMPv3UserAuthEncrypt NETWORK-OPERATOR [auth-
md5|auth-sha] [priv-aes128|priv-des]
```

The following command configures an SNMPv3 username on the ONTAP side:

```
security login create -user-or-group-name SNMPv3_USER -application snmp
-authentication-method usm -remote-switch-ipaddress ADDRESS
```

The following command establishes the SNMPv3 username with CSHM:

```
cluster1::*> system switch ethernet modify -device DEVICE -snmp-version
SNMPv3 -community-or-username SNMPv3_USER
```

Steps

1. Set up the SNMPv3 user on the switch to use authentication and encryption:

```
show snmp status
```

```
(sw1)(Config)# snmp-server user <username> network-admin auth-md5
<password> priv-aes128 <password>

(cs1)(Config)# show snmp user snmp

     Name            Group Name      Auth Priv
                                     Meth Meth    Remote Engine ID
---------------- ------------------ ---- ------
-------------------------
<username>        network-admin      MD5  AES128
8000113d03d8c497710bee
```

2. Set up the SNMPv3 user on the ONTAP side:

```
security login create -user-or-group-name <username> -application
snmp -authentication-method usm -remote-switch-ipaddress
10.231.80.212
```

```
cluster1::*> security login create -user-or-group-name <username>
-application snmp -authentication-method usm -remote-switch
-ipaddress 10.231.80.212

Enter the authoritative entity's EngineID [remote EngineID]:

Which authentication protocol do you want to choose (none, md5, sha,
sha2-256)
[none]: md5

Enter the authentication protocol password (minimum 8 characters
long):

Enter the authentication protocol password again:

Which privacy protocol do you want to choose (none, des, aes128)
[none]: aes128

Enter privacy protocol password (minimum 8 characters long):
Enter privacy protocol password again:
```

3. Configure CSHM to monitor with the new SNMPv3 user:

```
system switch ethernet show-all -device "sw1" -instance
```

```
cluster1::*> system switch ethernet show-all -device "sw1
(b8:59:9f:09:7c:22)" -instance

                                  Device Name: sw1
                                   IP Address: 10.228.136.24
                                 SNMP Version: SNMPv2c
                                Is Discovered: true
DEPRECATED-Community String or SNMPv3 Username: -
           Community String or SNMPv3 Username: cshm1!
                                 Model Number: BES-53248
                               Switch Network: cluster-network
                             Software Version: 3.9.0.2
                       Reason For Not Monitoring: None  <---- should
display this if SNMP settings are valid
                        Source Of Switch Version: CDP/ISDP
                                  Is Monitored ?: true
                    Serial Number of the Device: QTFCU3826001C
                                   RCF Version: v1.8X2 for
Cluster/HA/RDMA

cluster1::*>
cluster1::*> system switch ethernet modify -device "sw1" -snmp
-version SNMPv3 -community-or-username <username>
```

4. After waiting the CSHM polling period, verify that the serial number is populated for the Ethernet switch.

```
system switch ethernet polling-interval show
```

```
cluster1::*> system switch ethernet polling-interval show
         Polling Interval (in minutes): 5

cluster1::*> system switch ethernet show-all -device "sw1" -instance
                                  Device Name: sw1
                                   IP Address: 10.228.136.24
                                 SNMP Version: SNMPv3
                                Is Discovered: true
DEPRECATED-Community String or SNMPv3 Username: -
           Community String or SNMPv3 Username: <username>
                                 Model Number: BES-53248
                               Switch Network: cluster-network
                             Software Version: 3.9.0.2
                       Reason For Not Monitoring: None  <---- should
display this if SNMP settings are valid
                        Source Of Switch Version: CDP/ISDP
                                  Is Monitored ?: true
                    Serial Number of the Device: QTFCU3826001C
                                   RCF Version: v1.8X2 for
Cluster/HA/RDMA
```

Cisco switches

Configure an SNMPv3 username SNMPv3_USER on Cisco 9336C-FX2 switches:

- For **no authentication**:

```
snmp-server user SNMPv3_USER NoAuth
```

- For **MD5/SHA authentication**:

```
snmp-server user SNMPv3_USER auth [md5|sha] AUTH-PASSWORD
```

- For **MD5/SHA authentication with AES/DES encryption**:

```
snmp-server user SNMPv3_USER AuthEncrypt  auth [md5|sha] AUTH-
PASSWORD priv aes-128 PRIV-PASSWORD
```

The following command configures an SNMPv3 username on the ONTAP side:

```
security login create -user-or-group-name SNMPv3_USER -application snmp
-authentication-method usm -remote-switch-ipaddress ADDRESS
```

The following command establishes the SNMPv3 username with CSHM:

```
system switch ethernet modify -device DEVICE -snmp-version SNMPv3
-community-or-username SNMPv3_USER
```

Steps

1. Set up the SNMPv3 user on the switch to use authentication and encryption:

```
show snmp user
```

```
(sw1)(Config)# snmp-server user SNMPv3User auth md5 <auth_password>
priv aes-128 <priv_password>

(sw1)(Config)# show snmp user

-----------------------------------------------------------------------
---------
                              SNMP USERS
-----------------------------------------------------------------------
---------

User              Auth            Priv(enforce)   Groups
acl_filter
----------------- --------------- --------------- ---------------
-----------
admin             md5             des(no)         network-admin
SNMPv3User        md5             aes-128(no)     network-operator

-----------------------------------------------------------------------
---------
     NOTIFICATION TARGET USERS (configured  for sending V3 Inform)
-----------------------------------------------------------------------
---------

User              Auth                Priv
----------------- ------------------ ------------

(sw1)(Config)#
```

2. Set up the SNMPv3 user on the ONTAP side:

```
security login create -user-or-group-name <username> -application
snmp -authentication-method usm -remote-switch-ipaddress
10.231.80.212
```

```
cluster1::*> system switch ethernet modify -device "sw1
(b8:59:9f:09:7c:22)" -is-monitoring-enabled-admin true

cluster1::*> security login create -user-or-group-name <username>
-application snmp -authentication-method usm -remote-switch
-ipaddress 10.231.80.212

Enter the authoritative entity's EngineID [remote EngineID]:

Which authentication protocol do you want to choose (none, md5, sha,
sha2-256)
[none]: md5

Enter the authentication protocol password (minimum 8 characters
long):

Enter the authentication protocol password again:

Which privacy protocol do you want to choose (none, des, aes128)
[none]: aes128

Enter privacy protocol password (minimum 8 characters long):
Enter privacy protocol password again:
```

3. Configure CSHM to monitor with the new SNMPv3 user:

```
system switch ethernet show-all -device "sw1" -instance
```

```
cluster1::*> system switch ethernet show-all -device "sw1" -instance

                                  Device Name: sw1
                                   IP Address: 10.231.80.212
                                 SNMP Version: SNMPv2c
                                Is Discovered: true
   SNMPv2c Community String or SNMPv3 Username: cshm1!
                                   Model Number: N9K-C9336C-FX2
                                 Switch Network: cluster-network
                               Software Version: Cisco Nexus
Operating System (NX-OS) Software, Version 9.3(7)
                     Reason For Not Monitoring: None  <---- displays
when SNMP settings are valid
                      Source Of Switch Version: CDP/ISDP
                                Is Monitored ?: true
                   Serial Number of the Device: QTFCU3826001C
                                   RCF Version: v1.8X2 for
Cluster/HA/RDMA

cluster1::*>
cluster1::*> system switch ethernet modify -device "sw1" -snmp
-version SNMPv3 -community-or-username <username>
cluster1::*>
```

4. Verify that the serial number to be queried with the newly created SNMPv3 user is the same as detailed in the previous step after the CSHM polling period has completed.

```
system switch ethernet polling-interval show
```

```
cluster1::*> system switch ethernet polling-interval show
         Polling Interval (in minutes): 5

cluster1::*> system switch ethernet show-all -device "sw1" -instance

                                  Device Name: sw1
                                   IP Address: 10.231.80.212
                                 SNMP Version: SNMPv3
                               Is Discovered: true
   SNMPv2c Community String or SNMPv3 Username: SNMPv3User
                                  Model Number: N9K-C9336C-FX2
                                Switch Network: cluster-network
                              Software Version: Cisco Nexus
Operating System (NX-OS) Software, Version 9.3(7)
                    Reason For Not Monitoring: None  <---- displays
when SNMP settings are valid
                     Source Of Switch Version: CDP/ISDP
                               Is Monitored ?: true
                   Serial Number of the Device: QTFCU3826001C
                                   RCF Version: v1.8X2 for
Cluster/HA/RDMA

cluster1::*>
```

NVIDIA - CL 5.4.0

Configure an SNMPv3 username SNMPv3_USER on NVIDIA SN2100 switches running CLI 5.4.0:

- For **no authentication**:

```
nv set service snmp-server username SNMPv3_USER auth-none
```

- For **MD5/SHA authentication**:

```
nv set service snmp-server username SNMPv3_USER [auth-md5|auth-sha]
AUTH-PASSWORD
```

- For **MD5/SHA authentication with AES/DES encryption**:

```
nv set service snmp-server username SNMPv3_USER [auth-md5|auth-sha]
AUTH-PASSWORD [encrypt-aes|encrypt-des] PRIV-PASSWORD
```

The following command configures an SNMPv3 username on the ONTAP side:

```
security login create -user-or-group-name SNMPv3_USER -application snmp
-authentication-method usm -remote-switch-ipaddress ADDRESS
```

The following command establishes the SNMPv3 username with CSHM:

```
system switch ethernet modify -device DEVICE -snmp-version SNMPv3
-community-or-username SNMPv3_USER
```

Steps

1. Set up the SNMPv3 user on the switch to use authentication and encryption:

```
net show snmp status
```

```
cumulus@sw1:~$ net show snmp status
Simple Network Management Protocol (SNMP) Daemon.
---------------------------------  ----------------
Current Status                     active (running)
Reload Status                      enabled
Listening IP Addresses             all vrf mgmt
Main snmpd PID                     4318
Version 1 and 2c Community String  Configured
Version 3 Usernames                Not Configured
---------------------------------  ----------------
cumulus@sw1:~$
cumulus@sw1:~$ net add snmp-server username SNMPv3User auth-md5
<password> encrypt-aes <password>
cumulus@sw1:~$ net commit
--- /etc/snmp/snmpd.conf        2020-08-02 21:09:34.686949282 +0000
+++ /run/nclu/snmp/snmpd.conf   2020-08-11 00:13:51.826126655 +0000
@@ -1,26 +1,28 @@
 # Auto-generated config file: do not edit. #
 agentaddress udp:@mgmt:161
 agentxperms 777 777 snmp snmp
 agentxsocket /var/agentx/master
 createuser _snmptrapusernameX
+createuser SNMPv3User MD5 <password> AES <password>
 ifmib_max_num_ifaces 500
 iquerysecname _snmptrapusernameX
 master agentx
 monitor -r 60 -o laNames -o laErrMessage "laTable" laErrorFlag != 0
 pass -p 10 1.3.6.1.2.1.1.1 /usr/share/snmp/sysDescr_pass.py
 pass_persist 1.2.840.10006.300.43
```

```
/usr/share/snmp/ieee8023_lag_pp.py
 pass_persist 1.3.6.1.2.1.17 /usr/share/snmp/bridge_pp.py
 pass_persist 1.3.6.1.2.1.31.1.1.1.18
/usr/share/snmp/snmpifAlias_pp.py
 pass_persist 1.3.6.1.2.1.47 /usr/share/snmp/entity_pp.py
 pass_persist 1.3.6.1.2.1.99 /usr/share/snmp/entity_sensor_pp.py
 pass_persist 1.3.6.1.4.1.40310.1 /usr/share/snmp/resq_pp.py
 pass_persist 1.3.6.1.4.1.40310.2
/usr/share/snmp/cl_drop_cntrs_pp.py
 pass_persist 1.3.6.1.4.1.40310.3 /usr/share/snmp/cl_poe_pp.py
 pass_persist 1.3.6.1.4.1.40310.4 /usr/share/snmp/bgpun_pp.py
 pass_persist 1.3.6.1.4.1.40310.5 /usr/share/snmp/cumulus-status.py
 pass_persist 1.3.6.1.4.1.40310.6 /usr/share/snmp/cumulus-sensor.py
 pass_persist 1.3.6.1.4.1.40310.7 /usr/share/snmp/vrf_bgpun_pp.py
+rocommunity cshm1! default
 rouser _snmptrapusernameX
+rouser SNMPv3User priv
 sysobjectid 1.3.6.1.4.1.40310
 sysservices 72
-rocommunity cshm1! default


net add/del commands since the last "net commit"

User        Timestamp                   Command
----------  --------------------------
-------------------------------------------------------------------
-----
SNMPv3User  2020-08-11 00:13:51.826987  net add snmp-server username
SNMPv3User auth-md5 <password> encrypt-aes <password>

cumulus@sw1:~$
cumulus@sw1:~$ net show snmp status
Simple Network Management Protocol (SNMP) Daemon.
---------------------------------  ----------------
Current Status                     active (running)
Reload Status                      enabled
Listening IP Addresses             all vrf mgmt
Main snmpd PID                     24253
Version 1 and 2c Community String  Configured
Version 3 Usernames                Configured     <---- Configured
here
---------------------------------  ----------------
cumulus@sw1:~$
```

2. Set up the SNMPv3 user on the ONTAP side:

```
security login create -user-or-group-name SNMPv3User -application
snmp -authentication-method usm -remote-switch-ipaddress
10.231.80.212
```

```
cluster1::*> security login create -user-or-group-name SNMPv3User
-application snmp -authentication-method usm -remote-switch
-ipaddress 10.231.80.212

Enter the authoritative entity's EngineID [remote EngineID]:

Which authentication protocol do you want to choose (none, md5, sha,
sha2-256)
[none]: md5

Enter the authentication protocol password (minimum 8 characters
long):

Enter the authentication protocol password again:

Which privacy protocol do you want to choose (none, des, aes128)
[none]: aes128

Enter privacy protocol password (minimum 8 characters long):
Enter privacy protocol password again:
```

3. Configure CSHM to monitor with the new SNMPv3 user:

```
system switch ethernet show-all -device "sw1 (b8:59:9f:09:7c:22)"
-instance
```

```
cluster1::*> system switch ethernet show-all -device "sw1
(b8:59:9f:09:7c:22)" -instance
                                  Device Name: sw1
(b8:59:9f:09:7c:22)
                                   IP Address: 10.231.80.212
                                 SNMP Version: SNMPv2c
                                Is Discovered: true
DEPRECATED-Community String or SNMPv3 Username: -
           Community String or SNMPv3 Username: cshm1!
                                 Model Number: MSN2100-CB2FC
                               Switch Network: cluster-network
                             Software Version: Cumulus Linux
version 5.4.0 running on Mellanox Technologies Ltd. MSN2100
                     Reason For Not Monitoring: None
                      Source Of Switch Version: LLDP
                                Is Monitored ?: true
                   Serial Number of the Device: MT2110X06399  <----
serial number to check
                                   RCF Version: MSN2100-RCF-v1.9X6-
Cluster-LLDP Aug-18-2022

cluster1::*>
cluster1::*> system switch ethernet modify -device "sw1
(b8:59:9f:09:7c:22)" -snmp-version SNMPv3 -community-or-username
SNMPv3User
```

4. Verify that the serial number to be queried with the newly created SNMPv3 user is the same as detailed in the previous step after the CSHM polling period has completed.

```
system switch ethernet polling-interval show
```

```
cluster1::*> system switch ethernet polling-interval show
         Polling Interval (in minutes): 5

cluster1::*> system switch ethernet show-all -device "sw1
(b8:59:9f:09:7c:22)" -instance
                                  Device Name: sw1
(b8:59:9f:09:7c:22)
                                   IP Address: 10.231.80.212
                                 SNMP Version: SNMPv3
                                Is Discovered: true
DEPRECATED-Community String or SNMPv3 Username: -
           Community String or SNMPv3 Username: SNMPv3User
                                 Model Number: MSN2100-CB2FC
                               Switch Network: cluster-network
                             Software Version: Cumulus Linux
version 5.4.0 running on Mellanox Technologies Ltd. MSN2100
                      Reason For Not Monitoring: None
                       Source Of Switch Version: LLDP
                                 Is Monitored ?: true
                   Serial Number of the Device: MT2110X06399  <----
serial number to check
                                   RCF Version: MSN2100-RCF-v1.9X6-
Cluster-LLDP Aug-18-2022
```

NVIDIA - CL 5.11.0

Configure an SNMPv3 username SNMPv3_USER on NVIDIA SN2100 switches running CLI 5.11.0:

- For **no authentication**:

```
nv set system snmp-server username SNMPv3_USER auth-none
```

- For **MD5/SHA authentication**:

```
nv set system snmp-server username SNMPv3_USER [auth-md5|auth-sha]
AUTH-PASSWORD
```

- For **MD5/SHA authentication with AES/DES encryption**:

```
nv set system snmp-server username SNMPv3_USER [auth-md5|auth-sha]
AUTH-PASSWORD [encrypt-aes|encrypt-des] PRIV-PASSWORD
```

The following command configures an SNMPv3 username on the ONTAP side:

```
security login create -user-or-group-name SNMPv3_USER -application snmp
-authentication-method usm -remote-switch-ipaddress ADDRESS
```

The following command establishes the SNMPv3 username with CSHM:

```
system switch ethernet modify -device DEVICE -snmp-version SNMPv3
-community-or-username SNMPv3_USER
```

Steps

1. Set up the SNMPv3 user on the switch to use authentication and encryption:

```
nv show system snmp-server
```

```
cumulus@sw1:~$ nv show system snmp-server
                      applied
--------------------  ----------------------------------------
[username]            SNMPv3_USER
[username]            limiteduser1
[username]            testuserauth
[username]            testuserauthaes
[username]            testusernoauth
trap-link-up
  check-frequency     60
trap-link-down
  check-frequency     60
[listening-address]   all
[readonly-community]  $nvsec$94d69b56e921aec1790844eb53e772bf
state                 enabled
cumulus@sw1:~$
```

2. Set up the SNMPv3 user on the ONTAP side:

```
security login create -user-or-group-name SNMPv3User -application
snmp -authentication-method usm -remote-switch-ipaddress
10.231.80.212
```

```
cluster1::*> security login create -user-or-group-name SNMPv3User
-application snmp -authentication-method usm -remote-switch
-ipaddress 10.231.80.212

Enter the authoritative entity's EngineID [remote EngineID]:

Which authentication protocol do you want to choose (none, md5, sha,
sha2-256)
[none]: md5

Enter the authentication protocol password (minimum 8 characters
long):

Enter the authentication protocol password again:

Which privacy protocol do you want to choose (none, des, aes128)
[none]: aes128

Enter privacy protocol password (minimum 8 characters long):
Enter privacy protocol password again:
```

3. Configure CSHM to monitor with the new SNMPv3 user:

```
system switch ethernet show-all -device "sw1 (b8:59:9f:09:7c:22)"
-instance
```

```
cluster1::*> system switch ethernet show-all -device "sw1
(b8:59:9f:09:7c:22)" -instance
                                  Device Name: sw1
(b8:59:9f:09:7c:22)
                                   IP Address: 10.231.80.212
                                 SNMP Version: SNMPv2c
                                Is Discovered: true
DEPRECATED-Community String or SNMPv3 Username: -
           Community String or SNMPv3 Username: cshm1!
                                 Model Number: MSN2100-CB2FC
                               Switch Network: cluster-network
                             Software Version: Cumulus Linux
version 5.11.0 running on Mellanox Technologies Ltd. MSN2100
                     Reason For Not Monitoring: None
                      Source Of Switch Version: LLDP
                                Is Monitored ?: true
                   Serial Number of the Device: MT2110X06399  <----
serial number to check
                                   RCF Version: MSN2100-RCF-v1.9X6-
Cluster-LLDP Aug-18-2022

cluster1::*>
cluster1::*> system switch ethernet modify -device "sw1
(b8:59:9f:09:7c:22)" -snmp-version SNMPv3 -community-or-username
SNMPv3User
```

4. Verify that the serial number to be queried with the newly created SNMPv3 user is the same as detailed in the previous step after the CSHM polling period has completed.

```
system switch ethernet polling-interval show
```

```
cluster1::*> system switch ethernet polling-interval show
         Polling Interval (in minutes): 5

cluster1::*> system switch ethernet show-all -device "sw1
(b8:59:9f:09:7c:22)" -instance
                                  Device Name: sw1
(b8:59:9f:09:7c:22)
                                   IP Address: 10.231.80.212
                                SNMP Version: SNMPv3
                               Is Discovered: true
DEPRECATED-Community String or SNMPv3 Username: -
           Community String or SNMPv3 Username: SNMPv3User
                                 Model Number: MSN2100-CB2FC
                               Switch Network: cluster-network
                             Software Version: Cumulus Linux
version 5.11.0 running on Mellanox Technologies Ltd. MSN2100
                     Reason For Not Monitoring: None
                      Source Of Switch Version: LLDP
                                Is Monitored ?: true
                   Serial Number of the Device: MT2110X06399  <----
serial number to check
                                   RCF Version: MSN2100-RCF-v1.9X6-
Cluster-LLDP Aug-18-2022
```

Check switch health

Health check overview

Health monitors proactively monitor certain critical conditions in your cluster and raise alerts if they detect a fault or risk.

To view the currently raised Ethernet switch health monitor alerts, run the command: `system health alert show -monitor ethernet-switch`

To view the available Ethernet switch health monitor alerts, run the command: `system health alert definition show -monitor ethernet-switch`

Manage the monitoring of Ethernet Switches

In most cases, Ethernet switches are automatically discovered by ONTAP and monitored by CSHM. The Reference Configuration File (RCF) applied to the switch, among other things, enables the Cisco Discovery Protocol (CDP) and/or the Link Layer Discovery Protocol (LLDP). However, you might need to manually add a switch that is not discovered or remove a switch that is no longer in use. You can also stop active

monitoring while retaining the switch in the configuration, such as during maintenance.

Create a switch entry so that ONTAP can monitor it

Use the `system switch ethernet create` command to manually configure and enable monitoring for a specified Ethernet switch. This is helpful if ONTAP does not add the switch automatically, or if you previously removed the switch and want to re-add it.

```
system switch ethernet create -device DeviceName -address 1.2.3.4 -snmp
-version SNMPv2c -community-or-username cshm1! -model NX3132V -type
cluster-network
```

A typical example is adding a switch named [DeviceName], with IP address 1.2.3.4, and SNMPv2c credentials set to **cshm1!**. Use `-type storage-network` instead of `-type cluster-network` if you are configuring a storage switch.

Disable monitoring without deleting the switch

If you want to pause or stop monitoring for a certain switch, but still retain it for future monitoring, modify its `is-monitoring-enabled-admim` parameter instead of deleting it.

For example:

```
system switch ethernet modify -device DeviceName -is-monitoring-enabled
-admin false
```

This lets you preserve switch details and configuration without generating new alerts or re-discoveries.

Remove a switch you no longer need

Use `system switch ethernet delete` to delete a switch that has been disconnected or is no longer required:

```
system switch ethernet delete -device DeviceName
```

By default, this command succeeds only if ONTAP does not currently detect the switch through CDP or LLDP. To remove a discovered switch, use the `-force` parameter:

```
system switch ethernet delete -device DeviceName -force
```

When `-force` is used, the switch might be re-added automatically if ONTAP detects it again.

Verify the monitoring of Ethernet switches

The Ethernet switch health monitor (CSHM) automatically attempts to monitor the switches that it discovers; however, monitoring might not happen automatically if the

switches are not configured correctly. You should verify that the health monitor is properly configured to monitor your switches.

Confirm monitoring of the connected Ethernet switches

To confirm that the connected Ethernet switches are being monitored, run:

```
system switch ethernet show
```

If the `Model` column displays **OTHER** or the `IS Monitored` field displays **false**, then ONTAP cannot monitor the switch. A value of **OTHER** typically indicates that ONTAP does not support that switch for health monitoring.

The `IS Monitored` field is set to **false** for the reason specified in the `Reason` field.

If a switch is not listed in the command output, ONTAP likely has not discovered it. Confirm that the switch is cabled correctly. If necessary, you can add the switch manually. See Manage the monitoring of Ethernet Switches for further details.

Confirm firmware and RCF versions are up to date

Make sure that the switch is running the latest supported firmware and that a compatible reference configuration file (RCF) has been applied. More information is available on the NetApp Support Downloads page.

By default, the health monitor uses SNMPv2c with the community string **cshm1!** for monitoring, but SNMPv3 can also be configured.

If you need to change the default SNMPv2c community string, make sure that the desired SNMPv2c community string has been configured on the switch.

```
system switch ethernet modify -device SwitchA -snmp-version SNMPv2c
-community-or-username newCommunity!
```

See Optional: Configure SNMPv3 for details on configuring SNMPv3 for use.

Confirm management network connection

Verify that the switch's management port is connected to the management network.

A correct management port connection is required for ONTAP to perform SNMP queries and log collection.

Troubleshoot alerts

Alerts are raised if a fault, risk, or critical condition is detected for an Ethernet switch in your cluster.

If there are raised alerts, the system health status reports a degraded status for the cluster.
The alerts raised include the information that you need to respond to degraded system health.

To view the available Ethernet switch health monitor alerts, run the command: `system health alert definition show -monitor ethernet-switch`

See the Knowledge Base article Switch Health Monitor Alert Resolution Guide for advanced resolution details of alerts.

Log collection

Log collection overview

With log collection set up, you can enable an hourly collection of periodic data that is collected by AutoSupport, and request detailed support logs.

See Configure log collection for further details.

Troubleshoot log collection

If you encounter any of the following error statuses reported by the log collection feature (visible in the output of the `system switch ethernet log show` command), try the corresponding debug steps:

Log collection error status	Resolution
RSA keys not present	Regenerate ONTAP SSH keys.
Switch password error	Verify credentials, test SSH connectivity, and regenerate ONTAP SSH keys. Review the switch documentation or contact NetApp support for instructions.
ECDSA keys not present for FIPS	If FIPS mode is enabled, ECDSA keys need to be generated on the switch before retrying.
Pre-existing log found	Remove the previous log collection file on the switch.
Switch dump log error	Ensure the switch user has log collection permissions. Refer to the prerequisites above.

If the resolution details do not work, contact NetApp support.

End-of-availability switches

End-of-availability

The following switches are no longer available for purchase, but are still supported.

- Cisco Nexus 3232C
- Cisco Nexus 3132Q-V
- Cisco Nexus 92300YC
- NetApp CN1610

End-of-sale and End-of-life announcements

- End-of-Sale and End-of-Life Announcement for the Cisco Nexus 3232C
- End-of-Sale and End-of-Life Announcement for the Cisco Nexus 31108PC-V, 31108TC-V and Nexus 3132Q-V
- End-of-Sale and End-of-Life Announcement for the Cisco N9K-C93120TX, N9K-C92300YC
- End-of-Sale and End-of-Life Announcement for the Cisco Nexus 5500 Series Switches
- End of Availability: NetApp CN1610 Cluster Interconnect SKUs

Cisco Nexus 3232C

Get started

Installation and setup workflow for Cisco Nexus 3232C switches

Cisco Nexus 3232C switches can be used as cluster switches in your AFF or FAS cluster. Cluster switches allow you to build ONTAP clusters with more than two nodes.

Follow these workflow steps to install and setup your to Cisco Nexus 3232C switch.

1. **Configuration requirements**

Review the configuration requirements for the 3232C cluster switch.

2. **Required documentation**

Review specific switch and controller documentation to set up your 3232C switches and the ONTAP cluster.

3. **Smart Call Home requirements**

Review the requirements for the Cisco Smart Call Home feature, used to monitor the hardware and software components on your network.

4 Install the hardware

Install the switch hardware.

5 Configure the software

Configure the switch software.

Configuration requirements for Cisco Nexus 3232C switches

For Cisco Nexus 3232C switch installation and maintenance, be sure to review configuration and network requirements.

Configuration requirements

To configure your cluster, you need the appropriate number and type of cables and cable connectors for your switches. Depending on the type of switch you are initially configuring, you need to connect to the switch console port with the included console cable; you also need to provide specific network information.

Network requirements

You need the following network information for all switch configurations:

- IP subnet for management network traffic
- Host names and IP addresses for each of the storage system controllers and all applicable switches
- Most storage system controllers are managed through the e0M interface by connecting to the Ethernet service port (wrench icon). On AFF A800 and AFF A700 systems, the e0M interface uses a dedicated Ethernet port.

Refer to the Hardware Universe for latest information. See What additional information do I need to install my equipment that is not in HWU? for more information about switch installation requirements.

What's next

After you've confirmed your configuration requirements, you can review the required documentation.

Documentation requirements for Cisco Nexus 3232C switches

For Cisco Nexus 3232C switch installation and maintenance, be sure to review all recommended documentation.

Switch documentation

To set up the Cisco Nexus 3232C switches, you need the following documentation from the Cisco Nexus 3000 Series Switches Support page.

Document title	Description
Nexus 3000 Series Hardware Installation Guide	Provides detailed information about site requirements, switch hardware details, and installation options.

Document title	Description
Cisco Nexus 3000 Series Switch Software Configuration Guides (choose the guide for the NX-OS release installed on your switches)	Provides initial switch configuration information that you need before you can configure the switch for ONTAP operation.
Cisco Nexus 3000 Series NX-OS Software Upgrade and Downgrade Guide (choose the guide for the NX-OS release installed on your switches)	Provides information on how to downgrade the switch to ONTAP supported switch software, if necessary.
Cisco Nexus 3000 Series NX-OS Command Reference Master Index	Provides links to the various command references provided by Cisco.
Cisco Nexus 3000 MIBs Reference	Describes the Management Information Base (MIB) files for the Nexus 3000 switches.
Nexus 3000 Series NX-OS System Message Reference	Describes the system messages for Cisco Nexus 3000 series switches, those that are informational, and others that might help diagnose problems with links, internal hardware, or the system software.
Cisco Nexus 3000 Series NX-OS Release Notes (choose the notes for the NX-OS release installed on your switches)	Describes the features, bugs, and limitations for the Cisco Nexus 3000 Series.
Regulatory, Compliance, and Safety Information for the Cisco Nexus 6000, Cisco Nexus 5000 Series, Cisco Nexus 3000 Series, and Cisco Nexus 2000 Series	Provides international agency compliance, safety, and statutory information for the Nexus 3000 series switches.

ONTAP systems documentation

To set up an ONTAP system, you need the following documents for your version of the operating system from ONTAP 9.

Name	Description
Controller-specific *Installation and Setup Instructions*	Describes how to install NetApp hardware.
ONTAP documentation	Provides detailed information about all aspects of the ONTAP releases.
Hardware Universe	Provides NetApp hardware configuration and compatibility information.

Rail kit and cabinet documentation

To install a 3232C Cisco switch in a NetApp cabinet, see the following hardware documentation.

Name	Description
42U System Cabinet, Deep Guide	Describes the FRUs associated with the 42U system cabinet, and provides maintenance and FRU replacement instructions.
Install a Cisco Nexus 3232C switch in a NetApp Cabinet	Describes how to install a Cisco Nexus 3232C switch in a four-post NetApp cabinet.

Smart Call Home requirements

To use Smart Call Home, you must configure a cluster network switch to communicate using email with the Smart Call Home system. In addition, you can optionally set up your cluster network switch to take advantage of Cisco's embedded Smart Call Home support feature.

Smart Call Home monitors the hardware and software components on your network. When a critical system configuration occurs, it generates an email-based notification and raises an alert to all the recipients that are configured in your destination profile.

Smart Call Home monitors the hardware and software components on your network. When a critical system configuration occurs, it generates an email-based notification and raises an alert to all the recipients that are configured in your destination profile.

Before you can use Smart Call Home, be aware of the following requirements:

- An email server must be in place.
- The switch must have IP connectivity to the email server.
- The contact name (SNMP server contact), phone number, and street address information must be configured. This is required to determine the origin of messages received.
- A CCO ID must be associated with an appropriate Cisco SMARTnet Service contract for your company.
- Cisco SMARTnet Service must be in place for the device to be registered.

The Cisco support site contains information about the commands to configure Smart Call Home.

Install hardware

Hardware install workflow for Cisco Nexus 3232C switches

To install and configure the hardware for a 3232C cluster switch, follow these steps:

1. **Complete the cabling worksheet**

The sample cabling worksheet provides examples of recommended port assignments from the switches to the controllers. The blank worksheet provides a template that you can use in setting up your cluster.

2 Install the switch

Install the 3232C switch.

3 Install the switch in a NetApp cabinet

Install the 3232C switch and pass-through panel in a NetApp cabinet as required.

4 Review cabling and configuration

Review support for NVIDIA Ethernet ports.

Complete Cisco Nexus 3232C cabling worksheet

If you want to document the supported platforms, download a PDF of this page and complete the cabling worksheet.

The sample cabling worksheet provides examples of recommended port assignments from the switches to the controllers. The blank worksheet provides a template that you can use in setting up your cluster.

Each switch can be configured as a single 100GbE, 40GbE port or 4 x 10GbE ports.

Sample cabling worksheet

The sample port definition on each pair of switches is as follows:

Cluster switch A		Cluster switch B	
Switch port	Node and port usage	Switch port	Node and port usage
1	4x10GbE/4x25GbE or 40/100GbE node	1	4x10GbE/4x25GbE or 40/100GbE node
2	4x10GbE/4x25GbE or 40/100GbE node	2	4x10GbE/4x25GbE or 40/100GbE node
3	4x10GbE/4x25GbE or 40/100GbE node	3	4x10GbE/4x25GbE or 40/100GbE node
4	4x10GbE/4x25GbE or 40/100GbE node	4	4x10GbE/4x25GbE or 40/100GbE node
5	4x10GbE/4x25GbE or 40/100GbE node	5	4x10GbE/4x25GbE or 40/100GbE node
6	4x10GbE/4x25GbE or 40/100GbE node	6	4x10GbE/4x25GbE or 40/100GbE node

Cluster switch A		Cluster switch B	
7	4x10GbE/4x25GbE or 40/100GbE node	7	4x10GbE/4x25GbE or 40/100GbE node
8	4x10GbE/4x25GbE or 40/100GbE node	8	4x10GbE/4x25GbE or 40/100GbE node
9	4x10GbE/4x25GbE or 40/100GbE node	9	4x10GbE/4x25GbE or 40/100GbE node
10	4x10GbE/4x25GbE or 40/100GbE node	10	4x10GbE/4x25GbE or 40/100GbE node
11	4x10GbE/4x25GbE or 40/100GbE node	11	4x10GbE/4x25GbE or 40/100GbE node
12	4x10GbE/4x25GbE or 40/100GbE node	12	4x10GbE/4x25GbE or 40/100GbE node
13	4x10GbE/4x25GbE or 40/100GbE node	13	4x10GbE/4x25GbE or 40/100GbE node
14	4x10GbE/4x25GbE or 40/100GbE node	14	4x10GbE/4x25GbE or 40/100GbE node
15	4x10GbE/4x25GbE or 40/100GbE node	15	4x10GbE/4x25GbE or 40/100GbE node
16	4x10GbE/4x25GbE or 40/100GbE node	16	4x10GbE/4x25GbE or 40/100GbE node
17	4x10GbE/4x25GbE or 40/100GbE node	17	4x10GbE/4x25GbE or 40/100GbE node
18	4x10GbE/4x25GbE or 40/100GbE node	18	4x10GbE/4x25GbE or 40/100GbE node
19	40G/100GbE node 19	19	40G/100GbE node 19
20	40G/100GbE node 20	20	40G/100GbE node 20
21	40G/100GbE node 21	21	40G/100GbE node 21
22	40G/100GbE node 22	22	40G/100GbE node 22
23	40G/100GbE node 23	23	40G/100GbE node 23

Cluster switch A		Cluster switch B	
24	40G/100GbE node 24	24	40G/100GbE node 24
25 through 30	Reserved	25 through 30	Reserved
31	100GbE ISL to switch B port 31	31	100GbE ISL to switch A port 31
32	100GbE ISL to switch B port 32	32	100GbE ISL to switch A port 32

Blank cabling worksheet

You can use the blank cabling worksheet to document the platforms that are supported as nodes in a cluster. The *Supported Cluster Connections* section of the Hardware Universe defines the cluster ports used by the platform.

Cluster switch A		Cluster switch B	
Switch port	Node/port usage	Switch port	Node/port usage
1		1	
2		2	
3		3	
4		4	
5		5	
6		6	
7		7	
8		8	
9		9	
10		10	
11		11	
12		12	
13		13	

Cluster switch A		Cluster switch B	
14		14	
15		15	
16		16	
17		17	
18		18	
19		19	
20		20	
21		21	
22		22	
23		23	
24		24	
25 through 30	Reserved	25 through 30	Reserved
31	100GbE ISL to switch B port 31	31	100GbE ISL to switch A port 31
32	100GbE ISL to switch B port 32	32	100GbE ISL to switch A port 32

What's next

After you've completed your cabling worksheets, you can install the switch.

Install the 3232C cluster switch

Follow this procedure to set up and configure the Cisco Nexus 3232C switch.

Before you begin

Make sure you have the following:

- Access to an HTTP, FTP, or TFTP server at the installation site to download the applicable NX-OS and Reference Configuration File (RCF) releases.
- Applicable NX-OS version, downloaded from the Cisco Software Download page.
- Applicable licenses, network and configuration information, and cables.

- Completed cabling worksheets.
- Applicable NetApp cluster network and management network RCFs downloaded from the NetApp Support Site at mysupport.netapp.com. All Cisco cluster network and management network switches arrive with the standard Cisco factory-default configuration. These switches also have the current version of the NX-OS software but do not have the RCFs loaded.
- Required switch and ONTAP documentation.

Steps

1. Rack the cluster network and management network switches and controllers.

If you are installing the…	Then…
Cisco Nexus 3232C in a NetApp system cabinet	See the *Installing a Cisco Nexus 3232C cluster switch and pass-through panel in a NetApp cabinet* guide for instructions to install the switch in a NetApp cabinet.
Equipment in a Telco rack	See the procedures provided in the switch hardware installation guides and the NetApp installation and setup instructions.

2. Cable the cluster network and management network switches to the controllers using the completed cabling worksheets.
3. Power on the cluster network and management network switches and controllers.

What's next?

Optionally, you can install a Cisco Nexus 3223C switch in a NetApp cabinet. Otherwise, go to review cabling and configuration.

Install a Cisco Nexus 3232C cluster switch in a NetApp cabinet

Depending on your configuration, you might need to install the Cisco Nexus 3232C cluster switch and pass-through panel in a NetApp cabinet with the standard brackets that are included with the switch.

Before you begin

- The initial preparation requirements, kit contents, and safety precautions in the Cisco Nexus 3000 Series Hardware Installation Guide.
- For each switch, the eight 10-32 or 12-24 screws and clip nuts to mount the brackets and slider rails to the front and rear cabinet posts.
- Cisco standard rail kit to install the switch in a NetApp cabinet.

> The jumper cords are not included with the pass-through kit and should be included with your switches. If they were not shipped with the switches, you can order them from NetApp (part number X1558A-R6).

Steps

1. Install the pass-through blanking panel in the NetApp cabinet.

   The pass-through panel kit is available from NetApp (part number X8784-R6).

The NetApp pass-through panel kit contains the following hardware:

- One pass-through blanking panel
- Four 10-32 x .75 screws
- Four 10-32 clip nuts

a. Determine the vertical location of the switches and blanking panel in the cabinet.

   In this procedure, the blanking panel will be installed in U40.

b. Install two clip nuts on each side in the appropriate square holes for front cabinet rails.

c. Center the panel vertically to prevent intrusion into adjacent rack space, and then tighten the screws.

d. Insert the female connectors of both 48-inch jumper cords from the rear of the panel and through the brush assembly.

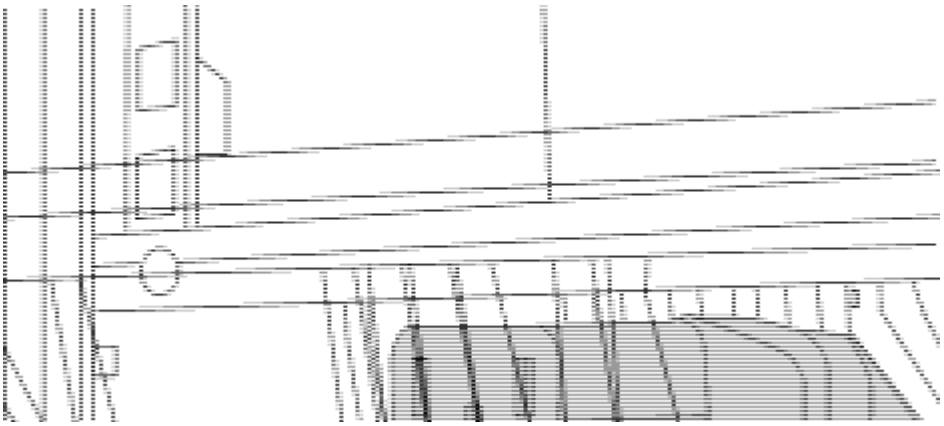

(1) Female connector of the jumper cord.

1. Install the rack-mount brackets on the Nexus 3232C switch chassis.

   a. Position a front rack-mount bracket on one side of the switch chassis so that the mounting ear is aligned with the chassis faceplate (on the PSU or fan side), and then use four M4 screws to attach the bracket to the chassis.

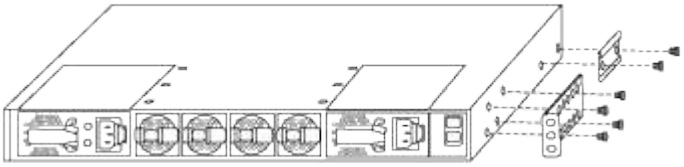

   b. Repeat step 2a with the other front rack-mount bracket on the other side of the switch.

   c. Install the rear rack-mount bracket on the switch chassis.

   d. Repeat step 2c with the other rear rack-mount bracket on the other side of the switch.

2. Install the clip nuts in the square hole locations for all four IEA posts.

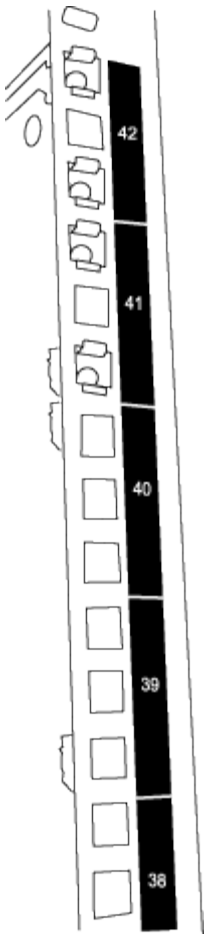

The two 3232C switches will always be mounted in the top 2U of the cabinet RU41 and 42.

3. Install the slider rails in the cabinet.
   a. Position the first slider rail at the RU42 mark on the back side of the rear left post, insert screws with the matching thread type, and then tighten the screws with your fingers.

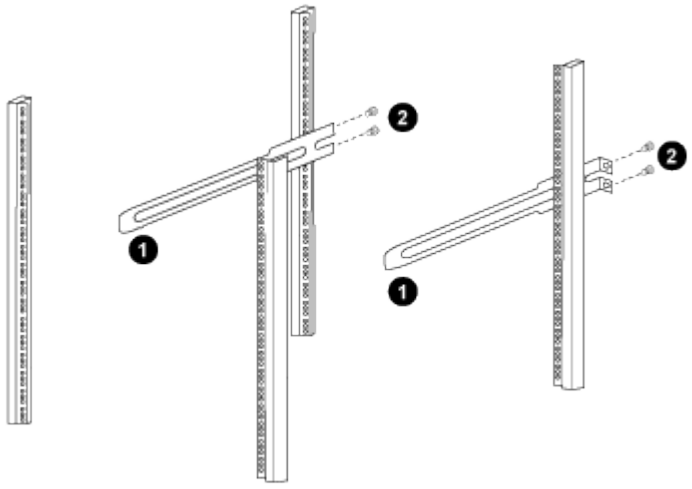

(1) As you gently slide the slider rail, align it to the screw holes in the rack.

(2) Tighten the screws of the slider rails to the cabinet posts.

   b. Repeat step 4a for the right side rear post.

c. Repeat steps 4a and 4b at the RU41 locations on the cabinet.

4. Install the switch in the cabinet.

> This step requires two people: one person to support the switch from the front and another to guide the switch into the rear slider rails.

a. Position the back of the switch at RU41.

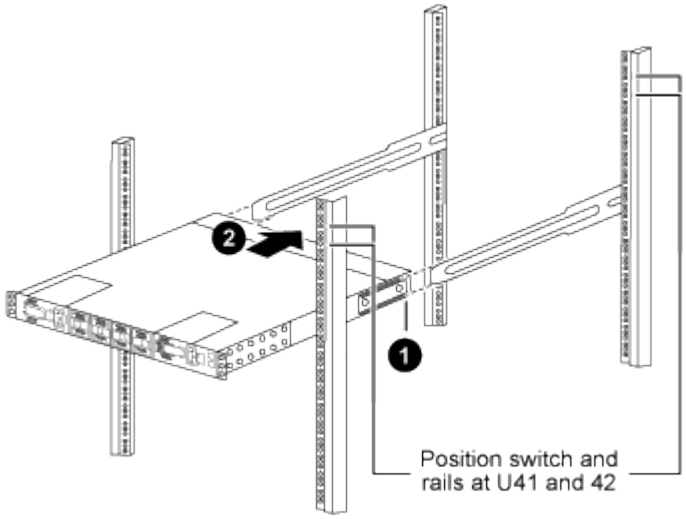

(1) As the chassis is pushed toward the rear posts, align the two rear rack-mount guides with the slider rails.

(2) Gently slide the switch until the front rack-mount brackets are flush with the front posts.

b. Attach the switch to the cabinet.

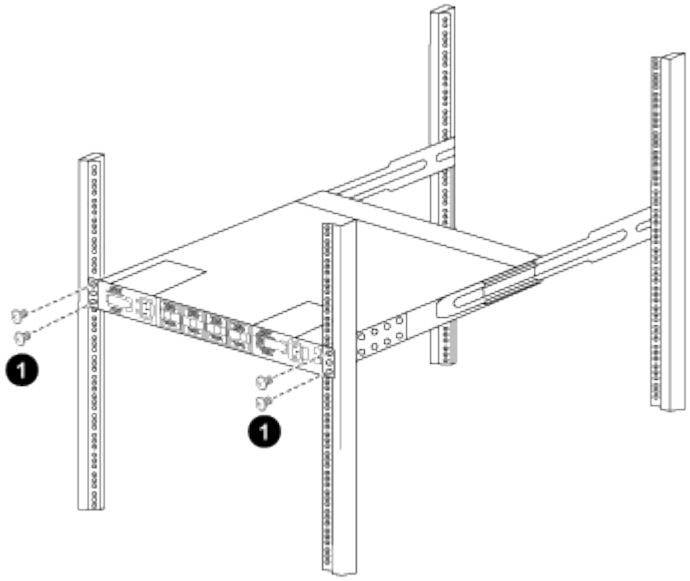

(1) With one person holding the front of the chassis level, the other person should fully tighten the four rear screws to the cabinet posts.

c. With the chassis now supported without assistance, fully tighten the front screws to the posts.

d. Repeat steps 5a through 5c for the second switch at the RU42 location.

> By using the fully installed switch as a support, it is not necessary to hold the front of the second switch during the installation process.

5. When the switches are installed, connect the jumper cords to the switch power inlets.
6. Connect the male plugs of both jumper cords to the closest available PDU outlets.

> To maintain redundancy, the two cords must be connected to different PDUs.

7. Connect the management port on each 3232C switch to either of the management switches (if ordered) or connect them directly to your management network.

   The management port is the upper-right port located on the PSU side of the switch. The CAT6 cable for each switch needs to be routed through the pass-through panel after the switches are installed to connect to the management switches or management network.

Review cabling and configuration considerations

Before configuring your Cisco 3232C switch, review the following considerations.

Support for NVIDIA CX6, CX6-DX, and CX7 Ethernet ports

If connecting a switch port to an ONTAP controller using NVIDIA ConnectX-6 (CX6), ConnectX-6 Dx (CX6-DX), or ConnectX-7 (CX7) NIC ports, you must hard-code the switch port speed.

```
(cs1)(config)# interface Ethernet1/19
For 100GbE speed:
(cs1)(config-if)# speed 100000
For 40GbE speed:
(cs1)(config-if)# speed 40000
(cs1)(config-if)# no negotiate auto
(cs1)(config-if)# exit
(cs1)(config)# exit
Save the changes:
(cs1)# copy running-config startup-config
```

See the Hardware Universe for more information on switch ports. See What additional information do I need to install my equipment that is not in HWU? for more information about switch installation requirements.

Configure software

Software install workflow for Cisco Nexus 3232C cluster switches

To install and configure the software for a Cisco Nexus 3232C switch and install or upgrade the Reference Configuration File (RCF), follow these steps:

1 Configure the switch

Configure the 3232C cluster switch.

2 Prepare to install the NX-OS software and RCF

The Cisco NX-OS software and reference configuration files (RCFs) must be installed on Cisco 3232C cluster switches.

3 Install or upgrade the NX-OS software

Download and install or upgrade the NX-OS software on the Cisco 3232C cluster switch.

4 Install the RCF

Install the RCF after setting up the Cisco 3232C switch for the first time.

5 Verify SSH configuration

Verify that SSH is enabled on the switches to use the Ethernet Switch Health Monitor (CSHM) and log collection features.

6 Reset the switch to factory defaults

Erase the 3232C cluster switch settings.

Configure the 3232C cluster switch

Follow this procedure to set up and configure the Cisco Nexus 3232C switch.

Before you begin

- Access to an HTTP, FTP or TFTP server at the installation site to download the applicable NX-OS and reference configuration file (RCF) releases.
- Applicable NX-OS version, downloaded from the Cisco software download page.
- Required cluster network and management network switch documentation.

  See Required documentation for more information.

- Required controller documentation and ONTAP documentation.

  NetApp documentation

- Applicable licenses, network and configuration information, and cables.
- Completed cabling worksheets.
- Applicable NetApp cluster network and management network RCFs, downloaded from the NetApp Support Site at mysupport.netapp.com for the switches that you receive. All Cisco cluster network and management network switches arrive with the standard Cisco factory-default configuration. These switches also have the

current version of the NX-OS software, but do not have the RCFs loaded.

Steps

1. Rack the cluster network and management network switches and controllers.

If you are installing your…	Then…
Cisco Nexus 3232C in a NetApp system cabinet	See the *Installing a Cisco Nexus 3232C cluster switch and pass-through panel in a NetApp cabinet* guide for instructions to install the switch in a NetApp cabinet.
Equipment in a Telco rack	See the procedures provided in the switch hardware installation guides and the NetApp installation and setup instructions.

2. Cable the cluster network and management network switches to the controllers using the completed cabling worksheets.
3. Power on the cluster network and management network switches and controllers.
4. Perform an initial configuration of the cluster network switches.

   Provide applicable responses to the following initial setup questions when you first boot the switch. Your site's security policy defines the responses and services to enable.

Prompt	Response
Abort Auto Provisioning and continue with normal setup? (yes/no)	Respond with **yes**. The default is no.
Do you want to enforce secure password standard? (yes/no)	Respond with **yes**. The default is yes.
Enter the password for admin.	The default password is "admin"; you must create a new, strong password. A weak password can be rejected.
Would you like to enter the basic configuration dialog? (yes/no)	Respond with **yes** at the initial configuration of the switch.
Create another login account? (yes/no)	Your answer depends on your site's policies on alternate administrators. The default is **no**.
Configure read-only SNMP community string? (yes/no)	Respond with **no**. The default is no.
Configure read-write SNMP community string? (yes/no)	Respond with **no**. The default is no.
Enter the switch name.	The switch name is limited to 63 alphanumeric characters.

Prompt	Response
Continue with Out-of-band (mgmt0) management configuration? (yes/no)	Respond with **yes** (the default) at that prompt. At the mgmt0 IPv4 address: prompt, enter your IP address: ip_address.
Configure the default-gateway? (yes/no)	Respond with **yes**. At the IPv4 address of the default-gateway: prompt, enter your default_gateway.
Configure advanced IP options? (yes/no)	Respond with **no**. The default is no.
Enable the telnet service? (yes/no)	Respond with **no**. The default is no.
Enabled SSH service? (yes/no)	Respond with **yes**. The default is yes. SSH is recommended when using Ethernet Switch Health Monitor (CSHM) for its log collection features. SSHv2 is also recommended for enhanced security.
Enter the type of SSH key you want to generate (dsa/rsa/rsa1).	The default is **rsa**.
Enter the number of key bits (1024-2048).	Enter the number of key bits from 1024-2048.
Configure the NTP server? (yes/no)	Respond with **no**. The default is no.
Configure default interface layer (L3/L2):	Respond with **L2**. The default is L2.
Configure default switch port interface state (shut/noshut):	Respond with **noshut**. The default is noshut.
Configure CoPP system profile (strict/moderate/lenient/dense):	Respond with **strict**. The default is strict.
Would you like to edit the configuration? (yes/no)	You should see the new configuration at this point. Review and make any necessary changes to the configuration you just entered. Respond with **no** at the prompt if you are satisfied with the configuration. Respond with **yes** if you want to edit your configuration settings.

Prompt	Response
Use this configuration and save it? (yes/no)	Respond with **yes** to save the configuration. This automatically updates the kickstart and system images. If you do not save the configuration at this stage, none of the changes will be in effect the next time you reboot the switch.

5. Verify the configuration choices you made in the display that appears at the end of the setup, and make sure that you save the configuration.
6. Check the version on the cluster network switches, and if necessary, download the NetApp-supported version of the software to the switches from the Cisco software download page.

What's next?

After you've configured your switches, you can prepare to install the NX-OS and RCF.

Prepare to install NX-OS software and Reference Configuration File (RCF)

Before you install the NX-OS software and the Reference Configuration File (RCF), follow this procedure.

About the examples

The examples in this procedure use two nodes. These nodes use two 10GbE cluster interconnect ports `e0a` and `e0b`.

See the Hardware Universe to verify the correct cluster ports on your platforms. See What additional information do I need to install my equipment that is not in HWU? for more information about switch installation requirements.

The command outputs might vary depending on different releases of ONTAP.

Switch and node nomenclature

The examples in this procedure use the following switch and node nomenclature:

- The names of the two Cisco switches are `cs1` and `cs2`.
- The node names are `cluster1-01` and `cluster1-02`.
- The cluster LIF names are `cluster1-01_clus1` and `cluster1-01_clus2` for cluster1-01 and `cluster1-02_clus1` and `cluster1-02_clus2` for cluster1-02.
- The `cluster1::*>` prompt indicates the name of the cluster.

About this task

The procedure requires the use of both ONTAP commands and Cisco Nexus 3000 Series Switches commands; ONTAP commands are used unless otherwise indicated.

Steps

1. If AutoSupport is enabled on this cluster, suppress automatic case creation by invoking an AutoSupport message:

```
system node autosupport invoke -node * -type all -message MAINT=x h
```

where *x* is the duration of the maintenance window in hours.

> The AutoSupport message notifies technical support of this maintenance task so that automatic case creation is suppressed during the maintenance window.

2. Change the privilege level to advanced, entering **y** when prompted to continue:

```
set -privilege advanced
```

The advanced prompt (`*>`) appears.

3. Display how many cluster interconnect interfaces are configured in each node for each cluster interconnect switch:

```
network device-discovery show -protocol cdp
```

Show example

```
cluster1::*> network device-discovery show -protocol cdp

Node/       Local  Discovered
Protocol    Port   Device (LLDP: ChassisID)  Interface
Platform
----------- ------ ------------------------- -----------------
--------
cluster1-02/cdp
            e0a    cs1                       Eth1/2            N3K-
C3232C
            e0b    cs2                       Eth1/2            N3K-
C3232C
cluster1-01/cdp
            e0a    cs1                       Eth1/1            N3K-
C3232C
            e0b    cs2                       Eth1/1            N3K-
C3232C

4 entries were displayed.
```

4. Check the administrative or operational status of each cluster interface.
   a. Display the network port attributes:

```
network port show -ipspace Cluster
```

Show example

```
cluster1::*> network port show -ipspace Cluster

Node: cluster1-02
                                                  Speed(Mbps)
Health
Port      IPspace      Broadcast Domain Link MTU  Admin/Oper
Status
--------- ------------ ---------------- ---- ---- -----------
------
e0a       Cluster      Cluster          up   9000  auto/10000
healthy
e0b       Cluster      Cluster          up   9000  auto/10000
healthy

Node: cluster1-01
                                                  Speed(Mbps)
Health
Port      IPspace      Broadcast Domain Link MTU  Admin/Oper
Status
--------- ------------ ---------------- ---- ---- -----------
------
e0a       Cluster      Cluster          up   9000  auto/10000
healthy
e0b       Cluster      Cluster          up   9000  auto/10000
healthy

4 entries were displayed.
```

b. Display information about the LIFs:
`network interface show -vserver Cluster`

Show example

```
cluster1::*> network interface show -vserver Cluster

            Logical            Status     Network
Current       Current Is
Vserver     Interface          Admin/Oper Address/Mask       Node
Port    Home
----------- ------------------ ---------- ------------------
------------ ------- ----
Cluster
            cluster1-01_clus1  up/up      169.254.209.69/16
cluster1-01   e0a     true
            cluster1-01_clus2  up/up      169.254.49.125/16
cluster1-01   e0b     true
            cluster1-02_clus1  up/up      169.254.47.194/16
cluster1-02   e0a     true
            cluster1-02_clus2  up/up      169.254.19.183/16
cluster1-02   e0b     true

4 entries were displayed.
```

5. Verify the connectivity of the remote cluster interfaces:

ONTAP 9.9.1 and later

You can use the `network interface check cluster-connectivity` command to start an accessibility check for cluster connectivity and then display the details:

`network interface check cluster-connectivity start` and `network interface check cluster-connectivity show`

```
cluster1::*> network interface check cluster-connectivity start
```

NOTE: Wait for a number of seconds before running the `show` command to display the details.

```
cluster1::*> network interface check cluster-connectivity show
                                  Source              Destination
Packet
Node   Date                       LIF                 LIF
Loss
------ -------------------------- ------------------- -------------------
------------ -----------
cluster1-01
       3/5/2022 19:21:18 -06:00   cluster1-01_clus2   cluster1-02_clus1
none
       3/5/2022 19:21:20 -06:00   cluster1-01_clus2   cluster1-02_clus2
none
.
.
cluster1-02
       3/5/2022 19:21:18 -06:00   cluster1-02_clus2   cluster1-01_clus1
none
       3/5/2022 19:21:20 -06:00   cluster1-02_clus2   cluster1-01_clus2
none
```

All ONTAP releases

For all ONTAP releases, you can also use the `cluster ping-cluster -node <name>` command to check the connectivity:

```
cluster ping-cluster -node <name>
```

```
cluster1::*> cluster ping-cluster -node local
Host is cluster1-02
Getting addresses from network interface table...
Cluster cluster1-01_clus1 169.254.209.69 cluster1-01     e0a
Cluster cluster1-01_clus2 169.254.49.125 cluster1-01     e0b
Cluster cluster1-02_clus1 169.254.47.194 cluster1-02     e0a
Cluster cluster1-02_clus2 169.254.19.183 cluster1-02     e0b
Local = 169.254.47.194 169.254.19.183
Remote = 169.254.209.69 169.254.49.125
Cluster Vserver Id = 4294967293
Ping status:....
Basic connectivity succeeds on 4 path(s)
Basic connectivity fails on 0 path(s)
................
Detected 9000 byte MTU on 4 path(s):
    Local 169.254.19.183 to Remote 169.254.209.69
    Local 169.254.19.183 to Remote 169.254.49.125
    Local 169.254.47.194 to Remote 169.254.209.69
    Local 169.254.47.194 to Remote 169.254.49.125
Larger than PMTU communication succeeds on 4 path(s)
RPC status:
2 paths up, 0 paths down (tcp check)
2 paths up, 0 paths down (udp check)
```

6. Verify that the `auto-revert` command is enabled on all cluster LIFs:
`network interface show -vserver Cluster -fields auto-revert`

Show example

```
cluster1::*> network interface show -vserver Cluster -fields auto-
revert

          Logical
Vserver   Interface           Auto-revert
--------- ------------------- ------------
Cluster
          cluster1-01_clus1   true
          cluster1-01_clus2   true
          cluster1-02_clus1   true
          cluster1-02_clus2   true
4 entries were displayed.
```

What's next?

After you've prepared to install the NX-OS software and RCF, you can install the NX-OS software.

Install the NX-OS software

You can use this procedure to install the NX-OS software on the Nexus 3232C cluster switch.

Review requirements

Before you begin

- A current backup of the switch configuration.
- A fully functioning cluster (no errors in the logs or similar issues).
- Cisco Ethernet switch page. Consult the switch compatibility table for the supported ONTAP and NX-OS versions.
- Cisco Nexus 3000 Series Switches. Refer to the appropriate software and upgrade guides available on the Cisco web site for complete documentation on the Cisco switch upgrade and downgrade procedures.

Install the software

The procedure requires the use of both ONTAP commands and Cisco Nexus 3000 Series Switches commands; ONTAP commands are used unless otherwise indicated.

Be sure to complete the procedure in Prepare to install NX-OS and RCF, and then follow the steps below.

Steps

1. Connect the cluster switch to the management network.
2. Use the `ping` command to verify connectivity to the server hosting the NX-OS software and the RCF.

   Show example

   This example verifies that the switch can reach the server at IP address 172.19.2.1:

   ```
   cs2# ping 172.19.2.1
   Pinging 172.19.2.1 with 0 bytes of data:

   Reply From 172.19.2.1: icmp_seq = 0. time= 5910 usec.
   ```

3. Display the cluster ports on each node that are connected to the cluster switches:

   ```
   network device-discovery show
   ```

Show example

```
cluster1::*> network device-discovery show
Node/       Local  Discovered
Protocol    Port   Device (LLDP: ChassisID)  Interface
Platform
----------- ------ ------------------------- ----------------
----------
cluster1-01/cdp
            e0a    cs1                       Ethernet1/7       N3K-
C3232C
            e0d    cs2                       Ethernet1/7       N3K-
C3232C
cluster1-02/cdp
            e0a    cs1                       Ethernet1/8       N3K-
C3232C
            e0d    cs2                       Ethernet1/8       N3K-
C3232C
cluster1-03/cdp
            e0a    cs1                       Ethernet1/1/1     N3K-
C3232C
            e0b    cs2                       Ethernet1/1/1     N3K-
C3232C
cluster1-04/cdp
            e0a    cs1                       Ethernet1/1/2     N3K-
C3232C
            e0b    cs2                       Ethernet1/1/2     N3K-
C3232C
cluster1::*>
```

4. Check the administrative and operational status of each cluster port.
   a. Verify that all the cluster ports are **up** with a healthy status:

      ```
      network port show -role cluster
      ```

Show example

```
cluster1::*> network port show -role cluster

Node: cluster1-01

Ignore
                                                  Speed(Mbps)
Health   Health
Port      IPspace      Broadcast Domain Link MTU  Admin/Oper
Status   Status
--------- ------------ ---------------- ---- ---- -----------
-------- ------
e0a       Cluster      Cluster          up   9000  auto/100000
healthy false
e0d       Cluster      Cluster          up   9000  auto/100000
healthy false

Node: cluster1-02

Ignore
                                                  Speed(Mbps)
Health   Health
Port      IPspace      Broadcast Domain Link MTU  Admin/Oper
Status   Status
--------- ------------ ---------------- ---- ---- -----------
-------- ------
e0a       Cluster      Cluster          up   9000  auto/100000
healthy false
e0d       Cluster      Cluster          up   9000  auto/100000
healthy false
8 entries were displayed.

Node: cluster1-03

   Ignore
                                                  Speed(Mbps)
Health   Health
Port      IPspace      Broadcast Domain Link MTU  Admin/Oper
Status   Status
--------- ------------ ---------------- ---- ---- -----------
-------- ------
e0a       Cluster      Cluster          up   9000  auto/10000
healthy  false
e0b       Cluster      Cluster          up   9000  auto/10000
healthy  false
```

```
Node: cluster1-04

Ignore
                                                          Speed(Mbps)
Health   Health
Port      IPspace      Broadcast Domain Link MTU  Admin/Oper
Status   Status
--------- ------------ ---------------- ---- ---- -----------
-------- ------
e0a       Cluster      Cluster          up   9000  auto/10000
healthy  false
e0b       Cluster      Cluster          up   9000  auto/10000
healthy  false
cluster1::*>
```

b. Verify that all the cluster interfaces (LIFs) are on the home port:

```
network interface show -role cluster
```

Show example

```
cluster1::*> network interface show -role cluster
            Logical            Status     Network
Current      Current Is
Vserver     Interface          Admin/Oper Address/Mask      Node
Port    Home
----------- ------------------ ---------- -----------------
------------ ------- ----
Cluster
            cluster1-01_clus1  up/up     169.254.3.4/23
cluster1-01  e0a     true
            cluster1-01_clus2  up/up     169.254.3.5/23
cluster1-01  e0d     true
            cluster1-02_clus1  up/up     169.254.3.8/23
cluster1-02  e0a     true
            cluster1-02_clus2  up/up     169.254.3.9/23
cluster1-02  e0d     true
            cluster1-03_clus1  up/up     169.254.1.3/23
cluster1-03  e0a     true
            cluster1-03_clus2  up/up     169.254.1.1/23
cluster1-03  e0b     true
            cluster1-04_clus1  up/up     169.254.1.6/23
cluster1-04  e0a     true
            cluster1-04_clus2  up/up     169.254.1.7/23
cluster1-04  e0b     true
8 entries were displayed.
cluster1::*>
```

c. Verify that the cluster displays information for both cluster switches:

```
system cluster-switch show -is-monitoring-enabled-operational true
```

Show example

```
cluster1::*> system cluster-switch show -is-monitoring-enabled
-operational true
Switch                      Type               Address
Model
--------------------------- ------------------ ----------------
----------
cs1                         cluster-network    10.233.205.90
N3K-C3232C
     Serial Number: FOCXXXXXXGD
      Is Monitored: true
            Reason: None
  Software Version: Cisco Nexus Operating System (NX-OS)
Software, Version
                    9.3(5)
    Version Source: CDP

cs2                         cluster-network    10.233.205.91
N3K-C3232C
     Serial Number: FOCXXXXXXGS
      Is Monitored: true
            Reason: None
  Software Version: Cisco Nexus Operating System (NX-OS)
Software, Version
                    9.3(5)
    Version Source: CDP
cluster1::*>
```

5. Disable auto-revert on the cluster LIFs. The cluster LIFs fail over to the partner cluster switch and remain there as you perform the upgrade procedure on the targeted switch:

   ```
   network interface modify -vserver Cluster -lif * -auto-revert false
   ```

6. Copy the NX-OS software and EPLD images to the Nexus 3232C switch.

Show example

```
cs2# copy sftp: bootflash: vrf management
Enter source filename: /code/nxos.9.3.4.bin
Enter hostname for the sftp server: 172.19.2.1
Enter username: user1

Outbound-ReKey for 172.19.2.1:22
Inbound-ReKey for 172.19.2.1:22
user1@172.19.2.1's password:
sftp> progress
Progress meter enabled
sftp> get   /code/nxos.9.3.4.bin  /bootflash/nxos.9.3.4.bin
/code/nxos.9.3.4.bin  100% 1261MB   9.3MB/s   02:15
sftp> exit
Copy complete, now saving to disk (please wait)...
Copy complete.


cs2# copy sftp: bootflash: vrf management
Enter source filename: /code/n9000-epld.9.3.4.img
Enter hostname for the sftp server: 172.19.2.1
Enter username: user1

Outbound-ReKey for 172.19.2.1:22
Inbound-ReKey for 172.19.2.1:22
user1@172.19.2.1's password:
sftp> progress
Progress meter enabled
sftp> get   /code/n9000-epld.9.3.4.img  /bootflash/n9000-
epld.9.3.4.img
/code/n9000-epld.9.3.4.img  100%  161MB   9.5MB/s   00:16
sftp> exit
Copy complete, now saving to disk (please wait)...
Copy complete.
```

7. Verify the running version of the NX-OS software:

   ```
   show version
   ```

Show example

```
cs2# show version
Cisco Nexus Operating System (NX-OS) Software
TAC support: http://www.cisco.com/tac
Copyright (C) 2002-2019, Cisco and/or its affiliates.
All rights reserved.
The copyrights to certain works contained in this software are
owned by other third parties and used and distributed under their
own
licenses, such as open source.  This software is provided "as is,"
and unless
otherwise stated, there is no warranty, express or implied,
including but not
limited to warranties of merchantability and fitness for a
particular purpose.
Certain components of this software are licensed under
the GNU General Public License (GPL) version 2.0 or
GNU General Public License (GPL) version 3.0  or the GNU
Lesser General Public License (LGPL) Version 2.1 or
Lesser General Public License (LGPL) Version 2.0.
A copy of each such license is available at
http://www.opensource.org/licenses/gpl-2.0.php and
http://opensource.org/licenses/gpl-3.0.html and
http://www.opensource.org/licenses/lgpl-2.1.php and
http://www.gnu.org/licenses/old-licenses/library.txt.

Software
  BIOS: version 08.37
  NXOS: version 9.3(3)
  BIOS compile time:  01/28/2020
  NXOS image file is: bootflash:///nxos.9.3.3.bin
  NXOS compile time:  12/22/2019 2:00:00 [12/22/2019 14:00:37]

Hardware
  cisco Nexus3000 C3232C Chassis (Nexus 9000 Series)
  Intel(R) Xeon(R) CPU E5-2403 v2 @ 1.80GHz with 8154432 kB of
memory.
  Processor Board ID FOCXXXXXXGD

  Device name: cs2
  bootflash:   53298520 kB
Kernel uptime is 0 day(s), 0 hour(s), 3 minute(s), 36 second(s)

Last reset at 74117 usecs after Tue Nov 24 06:24:23 2020
  Reason: Reset Requested by CLI command reload
```

```
  System version: 9.3(3)
  Service:

plugin
  Core Plugin, Ethernet Plugin

Active Package(s):

cs2#
```

8. Install the NX-OS image.

   Installing the image file causes it to be loaded every time the switch is rebooted.

Show example

```
cs2# install all nxos bootflash:nxos.9.3.4.bin
Installer will perform compatibility check first. Please wait.
Installer is forced disruptive

Verifying image bootflash:/nxos.9.3.4.bin for boot variable "nxos".
[] 100% -- SUCCESS

Verifying image type.
[] 100% -- SUCCESS

Preparing "nxos" version info using image bootflash:/nxos.9.3.4.bin.
[] 100% -- SUCCESS

Preparing "bios" version info using image bootflash:/nxos.9.3.4.bin.
[] 100% -- SUCCESS

Performing module support checks.
[] 100% -- SUCCESS

Notifying services about system upgrade.
[] 100% -- SUCCESS


Compatibility check is done:
Module  bootable          Impact              Install-type  Reason
------- ----------------- ------------------- -------------
----------
     1     Yes            Disruptive          Reset         Default
upgrade is not hitless


Images will be upgraded according to following table:
Module       Image       Running-Version(pri:alt)
New-Version          Upg-Required
------------ ----------- ----------------------------------------
-------------------- ------------
     1       nxos        9.3(3)
9.3(4)               yes
     1       bios        v08.37(01/28/2020):v08.32(10/18/2016)
v08.37(01/28/2020)   no


Switch will be reloaded for disruptive upgrade.
Do you want to continue with the installation (y/n)?  [n] y
```

```
Install is in progress, please wait.

Performing runtime checks.
[] 100% -- SUCCESS

Setting boot variables.
[] 100% -- SUCCESS

Performing configuration copy.
[] 100% -- SUCCESS

Module 1: Refreshing compact flash and upgrading
bios/loader/bootrom.
Warning: please do not remove or power off the module at this time.
[] 100% -- SUCCESS


Finishing the upgrade, switch will reboot in 10 seconds.
cs2#
```

9. Verify the new version of NX-OS software after the switch has rebooted:

   ```
   show version
   ```

Show example

```
cs2# show version
Cisco Nexus Operating System (NX-OS) Software
TAC support: http://www.cisco.com/tac
Copyright (C) 2002-2020, Cisco and/or its affiliates.
All rights reserved.
The copyrights to certain works contained in this software are
owned by other third parties and used and distributed under their
own
licenses, such as open source.  This software is provided "as is,"
and unless
otherwise stated, there is no warranty, express or implied,
including but not
limited to warranties of merchantability and fitness for a
particular purpose.
Certain components of this software are licensed under
the GNU General Public License (GPL) version 2.0 or
GNU General Public License (GPL) version 3.0  or the GNU
Lesser General Public License (LGPL) Version 2.1 or
Lesser General Public License (LGPL) Version 2.0.
A copy of each such license is available at
http://www.opensource.org/licenses/gpl-2.0.php and
http://opensource.org/licenses/gpl-3.0.html and
http://www.opensource.org/licenses/lgpl-2.1.php and
http://www.gnu.org/licenses/old-licenses/library.txt.

Software
  BIOS: version 08.37
  NXOS: version 9.3(4)
  BIOS compile time:  01/28/2020
  NXOS image file is: bootflash:///nxos.9.3.4.bin
  NXOS compile time:  4/28/2020 21:00:00 [04/29/2020 06:28:31]

Hardware
 cisco Nexus3000 C3232C Chassis (Nexus 9000 Series)
  Intel(R) Xeon(R) CPU E5-2403 v2 @ 1.80GHz with 8154432 kB of
memory.
  Processor Board ID FOCXXXXXXGS

  Device name: rtpnpi-mcc01-8200-ms-A1
  bootflash:   53298520 kB
Kernel uptime is 0 day(s), 0 hour(s), 3 minute(s), 14 second(s)

Last reset at 196755 usecs after Tue Nov 24 06:37:36 2020
  Reason: Reset due to upgrade
```

```
  System version: 9.3(3)
  Service:

plugin
  Core Plugin, Ethernet Plugin

Active Package(s):

cs2#
```

10. Upgrade the EPLD image and reboot the switch.

Show example

```
cs2# show version module 1 epld

EPLD Device                          Version
---------------------------------------
MI   FPGA                            0x12
IO   FPGA                            0x11

cs2# install epld bootflash:n9000-epld.9.3.4.img module 1
Compatibility check:
Module        Type         Upgradable    Impact      Reason
------  -----------------  ----------    ----------
-----------------
     1         SUP         Yes           Disruptive  Module
Upgradable

Retrieving EPLD versions.... Please wait.
Images will be upgraded according to following table:
Module  Type   EPLD              Running-Version   New-Version  Upg-
Required
------  ----  -----------------  ---------------   -----------
------------
     1   SUP   MI FPGA                0x12         0x12         No
     1   SUP   IO FPGA                0x11         0x12         Yes
The above modules require upgrade.
The switch will be reloaded at the end of the upgrade
Do you want to continue (y/n) ?  [n] y

Proceeding to upgrade Modules.

Starting Module 1 EPLD Upgrade

Module 1 : IO FPGA [Programming] : 100.00% (     64 of      64
sectors)
Module 1 EPLD upgrade is successful.
Module        Type  Upgrade-Result
------  ------------------  --------------
     1         SUP         Success

Module 1 EPLD upgrade is successful.
cs2#
```

11. If you are upgrading to NX-OS version 9.3(11), you must upgrade the EPLD `golden` image and reboot the switch once again. Otherwise, skip to step 12.

See EPLD Upgrade Release Notes, Release 9.3(11) for further details.

Show example

```
cs2# install epld bootflash:n9000-epld.9.3.11.img module 1 golden
Digital signature verification is successful
Compatibility check:
Module        Type         Upgradable     Impact      Reason
------  -----------------  ------------  ----------
-----------------
     1        SUP          Yes            Disruptive  Module
Upgradable

Retrieving EPLD versions.... Please wait.
The above modules require upgrade.
The switch will be reloaded at the end of the upgrade
Do you want to continue (y/n) ?  [n] y

Proceeding to upgrade Modules.

 Starting Module 1 EPLD Upgrade

Module 1 : MI FPGA [Programming] : 100.00% (     64 of      64 sect)
Module 1 : IO FPGA [Programming] : 100.00% (     64 of      64 sect)
Module 1 EPLD upgrade is successful.
Module        Type          Upgrade-Result
------  ------------------  --------------
     1         SUP          Success

EPLDs upgraded.

Module 1 EPLD upgrade is successful.
cs2#
```

12. After the switch reboot, log in to verify that the new version of EPLD loaded successfully.

Show example

```
cs2# show version module 1 epld

EPLD Device                       Version
---------------------------------------
MI   FPGA                          0x12
IO   FPGA                          0x12
```

13. Verify the health of cluster ports on the cluster.
    a. Verify that cluster ports are up and healthy across all nodes in the cluster:

       ```
       network port show -role cluster
       ```

Show example

```
cluster1::*> network port show -role cluster

Node: cluster1-01

Ignore
                                                  Speed(Mbps)
Health   Health
Port      IPspace      Broadcast Domain Link MTU  Admin/Oper
Status   Status
--------- ------------ ---------------- ---- ---- -----------
-------- ------
e0a       Cluster      Cluster          up   9000  auto/10000
healthy  false
e0b       Cluster      Cluster          up   9000  auto/10000
healthy  false

Node: cluster1-02

Ignore
                                                  Speed(Mbps)
Health   Health
Port      IPspace      Broadcast Domain Link MTU  Admin/Oper
Status   Status
--------- ------------ ---------------- ---- ---- -----------
-------- ------
e0a       Cluster      Cluster          up   9000  auto/10000
healthy  false
e0b       Cluster      Cluster          up   9000  auto/10000
healthy  false

Node: cluster1-03

Ignore
                                                  Speed(Mbps)
Health   Health
Port      IPspace      Broadcast Domain Link MTU  Admin/Oper
Status   Status
--------- ------------ ---------------- ---- ---- -----------
-------- ------
e0a       Cluster      Cluster          up   9000  auto/100000
healthy false
e0d       Cluster      Cluster          up   9000  auto/100000
healthy false
```

```
Node: cluster1-04

Ignore
                                                          Speed(Mbps)
Health   Health
Port      IPspace      Broadcast Domain Link MTU  Admin/Oper
Status   Status
--------- ------------ ---------------- ---- ---- -----------
-------- ------
e0a       Cluster      Cluster          up   9000  auto/100000
healthy false
e0d       Cluster      Cluster          up   9000  auto/100000
healthy false
8 entries were displayed.
```

b. Verify the switch health from the cluster.

```
network device-discovery show -protocol cdp
```

Show example

```
cluster1::*> network device-discovery show -protocol cdp
Node/       Local  Discovered
Protocol    Port   Device (LLDP: ChassisID)  Interface
Platform
----------- ------ ------------------------- -----------------
----------
cluster1-01/cdp
            e0a    cs1                       Ethernet1/7
N3K-C3232C
            e0d    cs2                       Ethernet1/7
N3K-C3232C
cluster01-2/cdp
            e0a    cs1                       Ethernet1/8
N3K-C3232C
            e0d    cs2                       Ethernet1/8
N3K-C3232C
cluster01-3/cdp
            e0a    cs1                       Ethernet1/1/1
N3K-C3232C
            e0b    cs2                       Ethernet1/1/1
N3K-C3232C
cluster1-04/cdp
            e0a    cs1                       Ethernet1/1/2
N3K-C3232C
            e0b    cs2                       Ethernet1/1/2
N3K-C3232C

cluster1::*> system cluster-switch show -is-monitoring-enabled
-operational true
Switch                      Type               Address
Model
--------------------------- ------------------ ----------------
----------
cs1                         cluster-network    10.233.205.90
N3K-C3232C
     Serial Number: FOCXXXXXXGD
      Is Monitored: true
            Reason: None
  Software Version: Cisco Nexus Operating System (NX-OS)
Software, Version
                    9.3(5)
    Version Source: CDP

cs2                         cluster-network    10.233.205.91
```

```
N3K-C3232C
     Serial Number: FOCXXXXXXGS
      Is Monitored: true
            Reason: None
  Software Version: Cisco Nexus Operating System (NX-OS)
Software, Version
                    9.3(5)
    Version Source: CDP

2 entries were displayed.
```

You might observe the following output on the cs1 switch console depending on the RCF version previously loaded on the switch:

```
2020 Nov 17 16:07:18 cs1 %$ VDC-1 %$ %STP-2-UNBLOCK_CONSIST_PORT:
Unblocking port port-channel1 on VLAN0092. Port consistency
restored.
2020 Nov 17 16:07:23 cs1 %$ VDC-1 %$ %STP-2-BLOCK_PVID_PEER:
Blocking port-channel1 on VLAN0001. Inconsistent peer vlan.
2020 Nov 17 16:07:23 cs1 %$ VDC-1 %$ %STP-2-BLOCK_PVID_LOCAL:
Blocking port-channel1 on VLAN0092. Inconsistent local vlan.
```

14. Verify that the cluster is healthy:

    `cluster show`

    Show example

    ```
    cluster1::*> cluster show
    Node                 Health   Eligibility   Epsilon
    -------------------- -------- ------------- -------
    cluster1-01          true     true          false
    cluster1-02          true     true          false
    cluster1-03          true     true          true
    cluster1-04          true     true          false
    4 entries were displayed.
    cluster1::*>
    ```

15. Repeat steps 6 to 14 on switch cs1.
16. Enable auto-revert on the cluster LIFs.

    `network interface modify -vserver Cluster -lif * -auto-revert true`

17. Verify that the cluster LIFs have reverted to their home port:

```
network interface show -role cluster
```

Show example

```
cluster1::*> network interface show -role cluster
            Logical            Status     Network            Current
Current Is
Vserver     Interface          Admin/Oper Address/Mask       Node
Port    Home
----------- ------------------ ---------- ------------------
------------------- ------- ----
Cluster
            cluster1-01_clus1  up/up      169.254.3.4/23
cluster1-01         e0d     true
            cluster1-01_clus2  up/up      169.254.3.5/23
cluster1-01         e0d     true
            cluster1-02_clus1  up/up      169.254.3.8/23
cluster1-02         e0d     true
            cluster1-02_clus2  up/up      169.254.3.9/23
cluster1-02         e0d     true
            cluster1-03_clus1  up/up      169.254.1.3/23
cluster1-03         e0b     true
            cluster1-03_clus2  up/up      169.254.1.1/23
cluster1-03         e0b     true
            cluster1-04_clus1  up/up      169.254.1.6/23
cluster1-04         e0b     true
            cluster1-04_clus2  up/up      169.254.1.7/23
cluster1-04         e0b     true
8 entries were displayed.
cluster1::*>
```

If any cluster LIFs have not returned to their home ports, revert them manually from the local node:

```
network interface revert -vserver Cluster -lif <lif_name>
```

What's next?

After you've installed the NX-OS software, you can install or upgrade the Reference Configuration File (RCF).

Install or upgrade the RCF

Install or upgrade the Reference Configuration File (RCF) overview

You install the Reference Configuration File (RCF) after setting up the Nexus 3232C switches for the first time. You upgrade your RCF version when you have an existing

version of the RCF file installed on your switch.

See the Knowledge Base article How to clear configuration on a Cisco interconnect switch while retaining remote connectivity for further information when installing or upgrading your RCF.

Available RCF configurations

The following table describes the RCFs available for different configurations. Choose the RCF applicable to your configuration.

For specific port and VLAN usage details, refer to the banner and important notes section in your RCF.

RCF name	Description
2-Cluster-HA-Breakout	Supports two ONTAP clusters with at least eight nodes, including nodes that use shared Cluster+HA ports.
4-Cluster-HA-Breakout	Supports four ONTAP clusters with at least four nodes, including nodes that use shared Cluster+HA ports.
1-Cluster-HA	All ports are configured for 40/100GbE. Supports shared cluster/HA traffic on ports. Required for AFF A320, AFF A250, and FAS500f systems. Additionally, all ports can be used as dedicated cluster ports.
1-Cluster-HA-Breakout	Ports are configured for 4x10GbE breakout, 4x25GbE breakout (RCF 1.6+ on 100GbE switches), and 40/100GbE. Supports shared cluster/HA traffic on ports for nodes that use shared cluster/HA ports: AFF A320, AFF A250, and FAS500f systems. Additionally, all ports can be used as dedicated cluster ports.
Cluster-HA-Storage	Ports are configured for 40/100GbE for Cluster+HA, 4x10GbE breakout for Cluster and 4x25GbE breakout for Cluster+HA, and 100GbE for each Storage HA Pair.
Cluster	Two flavors of RCF with different allocations of 4x10GbE ports (breakout) and 40/100GbE ports. All FAS/AFF nodes are supported, except for AFF A320, AFF A250, and FAS500f systems.
Storage	All ports are configured for 100GbE NVMe storage connections.

Available RCFs

The following table lists the available RCFs for 3232C switches. Choose the applicable RCF version for your configuration. See Cisco Ethernet Switches for more information.

RCF name
Cluster-HA-Breakout RCF v1.*xx*
Cluster-HA RCF v1.*xx*

RCF name
Storage RCF v1.*xx*
Cluster RCF 1.*xx*

Suggested documentation

- Cisco Ethernet Switches (NSS)

  Consult the switch compatibility table for the supported ONTAP and RCF versions on the NetApp Support Site. Note that there can be command dependencies between the command syntax in the RCF and the syntax found in specific versions of NX-OS.

- Cisco Nexus 3000 Series Switches

  Refer to the appropriate software and upgrade guides available on the Cisco website for complete documentation on the Cisco switch upgrade and downgrade procedures.

About the examples

The examples in this procedure use the following switch and node nomenclature:

- The names of the two Cisco switches are **cs1** and **cs2**.
- The node names are **cluster1-01**, **cluster1-02**, **cluster1-03**, and **cluster1-04**.
- The cluster LIF names are **cluster1-01_clus1**, **cluster1-01_clus2**, **cluster1-02_clus1**, **cluster1-02_clus2**, **cluster1-03_clus1**, **cluster1-03_clus2**, **cluster1-04_clus1**, and **cluster1-04_clus2**.
- The `cluster1::*>` prompt indicates the name of the cluster.

The examples in this procedure use four nodes. These nodes use two 10GbE cluster interconnect ports **e0a** and **e0b**. See the Hardware Universe to verify the correct cluster ports on your platforms.

The command outputs might vary depending on different releases of ONTAP.

For details of the available RCF configurations, see Software install workflow.

Commands used

The procedure requires the use of both ONTAP commands and Cisco Nexus 3000 Series Switches commands; ONTAP commands are used unless otherwise indicated.

What's next?

After you've reviewed the install RCF or upgrade RCF procedure overview, you can install the RCF or upgrade your RCF as required.

Install the Reference Configuration File (RCF)

You install the Reference Configuration File (RCF) after setting up the Nexus 3232C switches for the first time.

Before you begin

Verify the following installations and connections:

- A current backup of the switch configuration.
- A fully functioning cluster (no errors in the logs or similar issues).
- The current RCF.
- A console connection to the switch, required when installing the RCF.

About this task

The procedure requires the use of both ONTAP commands and Cisco Nexus 3000 Series Switches commands; ONTAP commands are used unless otherwise indicated.

No operational inter-switch link (ISL) is needed during this procedure. This is by design because RCF version changes can affect ISL connectivity temporarily. To enable non-disruptive cluster operations, the following procedure migrates all of the cluster LIFs to the operational partner switch while performing the steps on the target switch.

Be sure to complete the procedure in Prepare to install NX-OS and RCF, and then follow the steps below.

Step 1: Install the RCF on the switches

1. Login to switch cs2 using SSH or by using a serial console.
2. Copy the RCF to the bootflash of switch cs2 using one of the following transfer protocols: FTP, TFTP, SFTP, or SCP. For more information on Cisco commands, see the appropriate guide in the Cisco Nexus 3000 Series NX-OS Command Reference.

   Show example

   This example shows TFTP being used to copy an RCF to the bootflash on switch cs2:

   ```
   cs2# copy tftp: bootflash: vrf management
   Enter source filename: Nexus_3232C_RCF_v1.6-Cluster-HA-Breakout.txt
   Enter hostname for the tftp server: 172.22.201.50
   Trying to connect to tftp server......Connection to Server
   Established.
   TFTP get operation was successful
   Copy complete, now saving to disk (please wait)...
   ```

3. Apply the RCF previously downloaded to the bootflash.

   For more information on Cisco commands, see the appropriate guide in the Cisco Nexus 3000 Series NX-OS Command Reference.

Show example

This example shows the RCF file `Nexus_3232C_RCF_v1.6-Cluster-HA-Breakout.txt` being installed on switch cs2:

```
cs2# copy Nexus_3232C_RCF_v1.6-Cluster-HA-Breakout.txt running-config echo-commands
```

Make sure to read thoroughly the **Installation notes**, **Important Notes**, and **banner** sections of your RCF. You must read and follow these instructions to ensure the proper configuration and operation of the switch.

4. Examine the banner output from the `show banner motd` command. You must read and follow the instructions under **Important Notes** to make sure the proper configuration and operation of the switch.
5. Verify that the RCF file is the correct newer version:

   ```
   show running-config
   ```

   When you check the output to verify you have the correct RCF, make sure that the following information is correct:

   - The RCF banner
   - The node and port settings
   - Customizations

     The output varies according to your site configuration. Check the port settings and refer to the release notes for any changes specific to the RCF that you have installed.

6. Reapply any previous customizations to the switch configuration. Refer to Review cabling and configuration considerations for details of any further changes required.
7. Save basic configuration details to the `write_erase.cfg` file on the bootflash.

   Make sure to configure the following:
   * Username and password
   * Management IP address
   * Default gateway
   * Switch name

   ```
   cs2# show run | section "switchname" > bootflash:write_erase.cfg

   cs2# show run | section "hostname" >> bootflash:write_erase.cfg

   cs2# show run | i "username admin password" >> bootflash:write_erase.cfg

   cs2# show run | section "vrf context management" >> bootflash:write_erase.cfg

   cs2# show run | section "interface mgmt0" >> bootflash:write_erase.cfg
   ```

8. When installing RCF version 1.12 and later, run the following commands:

```
cs2# echo "hardware access-list tcam region racl-lite 512" >>
bootflash:write_erase.cfg

cs2# echo "hardware access-list tcam region qos 256" >>
bootflash:write_erase.cfg
```

   See the Knowledge Base article How to clear configuration on a Cisco interconnect switch while retaining remote connectivity for further details.

9. Verify that the `write_erase.cfg` file is populated as expected:

```
show file bootflash:write_erase.cfg
```

10. Issue the `write erase` command to erase the current saved configuration:

```
cs2# write erase

Warning: This command will erase the startup-configuration.

Do you wish to proceed anyway? (y/n) [n] y
```

11. Copy the previously saved basic configuration into the startup configuration.

```
cs2# copy bootflash:write_erase.cfg startup-config
```

12. Reboot switch cs2:

```
cs2# reload

This command will reboot the system. (y/n)? [n] y
```

13. Repeat Steps 1 to 12 on switch cs1.
14. Connect the cluster ports of all nodes in the ONTAP cluster to switches cs1 and cs2.

Step: 2: Verify the switch connections

1. Verify that the switch ports connected to the cluster ports are **up**.

```
show interface brief | grep up
```

Show example

```
cs1# show interface brief | grep up
.
.
Eth1/1/1      1       eth  access up      none
10G(D) --
Eth1/1/2      1       eth  access up      none
10G(D) --
Eth1/7        1       eth  trunk  up      none
100G(D) --
Eth1/8        1       eth  trunk  up      none
100G(D) --
.
.
```

2. Verify that the ISL between cs1 and cs2 is functional:

   `show port-channel summary`

Show example

```
cs1# show port-channel summary
Flags:  D - Down         P - Up in port-channel (members)
        I - Individual   H - Hot-standby (LACP only)
        s - Suspended    r - Module-removed
        b - BFD Session Wait
        S - Switched     R - Routed
        U - Up (port-channel)
        p - Up in delay-lacp mode (member)
        M - Not in use. Min-links not met
--------------------------------------------------------------------------
------------
Group Port-       Type     Protocol  Member Ports
      Channel
--------------------------------------------------------------------------
------------
1     Po1(SU)     Eth      LACP      Eth1/31(P)   Eth1/32(P)
cs1#
```

3. Verify that the cluster LIFs have reverted to their home port:

   `network interface show -role cluster`

Show example

```
cluster1::*> network interface show -role cluster
            Logical            Status     Network            Current
Current Is
Vserver     Interface          Admin/Oper Address/Mask       Node
Port    Home
----------- ------------------ ---------- ------------------
------------------- ------- ----
Cluster
            cluster1-01_clus1  up/up      169.254.3.4/23
cluster1-01         e0d     true
            cluster1-01_clus2  up/up      169.254.3.5/23
cluster1-01         e0d     true
            cluster1-02_clus1  up/up      169.254.3.8/23
cluster1-02         e0d     true
            cluster1-02_clus2  up/up      169.254.3.9/23
cluster1-02         e0d     true
            cluster1-03_clus1  up/up      169.254.1.3/23
cluster1-03         e0b     true
            cluster1-03_clus2  up/up      169.254.1.1/23
cluster1-03         e0b     true
            cluster1-04_clus1  up/up      169.254.1.6/23
cluster1-04         e0b     true
            cluster1-04_clus2  up/up      169.254.1.7/23
cluster1-04         e0b     true
8 entries were displayed.
cluster1::*>
```

If any cluster LIFS have not returned to their home ports, revert them manually:
`network interface revert -vserver <vserver_name> -lif <lif_name>`

4. Verify that the cluster is healthy:

   `cluster show`

Show example

```
cluster1::*> cluster show
Node                  Health  Eligibility   Epsilon
--------------------- ------- ------------- -------
cluster1-01           true    true          false
cluster1-02           true    true          false
cluster1-03           true    true          true
cluster1-04           true    true          false
4 entries were displayed.
cluster1::*>
```

Step 3: Setup your ONTAP cluster

NetApp recommends that you use System Manager to set up new clusters.

System Manager provides a simple and easy workflow for cluster set up and configuration including assigning a node management IP address, initializing the cluster, creating a local tier, configuring protocols, and provisioning initial storage.

Refer to Configure ONTAP on a new cluster with System Manager for setup instructions.

What's next?

After you've installed the RCF, you can verify the SSH configuration.

Upgrade your Reference Configuration File (RCF)

You upgrade your RCF version when you have an existing version of the RCF file installed on your operational switches.

Before you begin

Make sure you have the following:

- A current backup of the switch configuration.
- A fully functioning cluster (no errors in the logs or similar issues).
- The current RCF.
- If you are updating your RCF version, you need a boot configuration in the RCF that reflects the desired boot images.

  If you need to change the boot configuration to reflect the current boot images, you must do so before reapplying the RCF so that the correct version is instantiated on future reboots.

No operational inter-switch link (ISL) is needed during this procedure. This is by design because RCF version changes can affect ISL connectivity temporarily. To ensure non-disruptive cluster operations, the following procedure migrates all of the cluster LIFs to the operational partner switch while performing the steps on the target switch.

Before installing a new switch software version and RCFs, you must erase the switch settings and perform basic configuration. You must be connected to the switch using the serial console or have preserved basic configuration information prior to erasing the switch settings.

Step 1: Prepare for the upgrade

1. Display the cluster ports on each node that are connected to the cluster switches:

   ```
   network device-discovery show
   ```

   Show example

   ```
   cluster1::*> network device-discovery show
   Node/       Local  Discovered
   Protocol    Port   Device (LLDP: ChassisID)  Interface
   Platform
   ----------- ------ ------------------------- ----------------
   --------
   cluster1-01/cdp
               e0a    cs1                       Ethernet1/7       N3K-
   C3232C
               e0d    cs2                       Ethernet1/7       N3K-
   C3232C
   cluster1-02/cdp
               e0a    cs1                       Ethernet1/8       N3K-
   C3232C
               e0d    cs2                       Ethernet1/8       N3K-
   C3232C
   cluster1-03/cdp
               e0a    cs1                       Ethernet1/1/1     N3K-
   C3232C
               e0b    cs2                       Ethernet1/1/1     N3K-
   C3232C
   cluster1-04/cdp
               e0a    cs1                       Ethernet1/1/2     N3K-
   C3232C
               e0b    cs2                       Ethernet1/1/2     N3K-
   C3232C
   cluster1::*>
   ```

2. Check the administrative and operational status of each cluster port.

   a. Verify that all the cluster ports are up with a healthy status:

      ```
      network port show -role cluster
      ```

Show example

```
cluster1::*> network port show -role cluster
Node: cluster1-01

Ignore
                                                  Speed(Mbps)
Health   Health
Port      IPspace      Broadcast Domain Link MTU  Admin/Oper
Status   Status
--------- ------------ ---------------- ---- ---- -----------
-------- ------
e0a       Cluster      Cluster          up   9000  auto/100000
healthy false
e0d       Cluster      Cluster          up   9000  auto/100000
healthy false
Node: cluster1-02

Ignore
                                                  Speed(Mbps)
Health   Health
Port      IPspace      Broadcast Domain Link MTU  Admin/Oper
Status   Status
--------- ------------ ---------------- ---- ---- -----------
-------- ------
e0a       Cluster      Cluster          up   9000  auto/100000
healthy false
e0d       Cluster      Cluster          up   9000  auto/100000
healthy false
8 entries were displayed.
Node: cluster1-03
   Ignore
                                                  Speed(Mbps)
Health   Health
Port      IPspace      Broadcast Domain Link MTU  Admin/Oper
Status   Status
--------- ------------ ---------------- ---- ---- -----------
-------- ------
e0a       Cluster      Cluster          up   9000  auto/10000
healthy  false
e0b       Cluster      Cluster          up   9000  auto/10000
healthy  false
Node: cluster1-04

Ignore
                                                  Speed(Mbps)
```

```
Health   Health
Port      IPspace      Broadcast Domain Link MTU  Admin/Oper
Status   Status
--------- ------------ ---------------- ---- ---- -----------
-------- ------
e0a       Cluster      Cluster          up   9000  auto/10000
healthy  false
e0b       Cluster      Cluster          up   9000  auto/10000
healthy  false
cluster1::*>
```

b. Verify that all the cluster interfaces (LIFs) are on the home port:

`network interface show -role cluster`

Show example

```
cluster1::*> network interface show -role cluster
            Logical            Status     Network
Current      Current Is
Vserver     Interface          Admin/Oper Address/Mask      Node
Port    Home
----------- ------------------ ---------- -----------------
------------ ------- ----
Cluster
            cluster1-01_clus1  up/up     169.254.3.4/23
cluster1-01  e0a     true
            cluster1-01_clus2  up/up     169.254.3.5/23
cluster1-01  e0d     true
            cluster1-02_clus1  up/up     169.254.3.8/23
cluster1-02  e0a     true
            cluster1-02_clus2  up/up     169.254.3.9/23
cluster1-02  e0d     true
            cluster1-03_clus1  up/up     169.254.1.3/23
cluster1-03  e0a     true
            cluster1-03_clus2  up/up     169.254.1.1/23
cluster1-03  e0b     true
            cluster1-04_clus1  up/up     169.254.1.6/23
cluster1-04  e0a     true
            cluster1-04_clus2  up/up     169.254.1.7/23
cluster1-04  e0b     true
8 entries were displayed.
cluster1::*>
```

c. Verify that the cluster displays information for both cluster switches:

```
system cluster-switch show -is-monitoring-enabled-operational true
```

Show example

```
cluster1::*> system cluster-switch show -is-monitoring-enabled
-operational true
Switch                      Type               Address
Model
--------------------------- ------------------ ----------------
---------------
cs1                         cluster-network    10.233.205.92
NX3232C
     Serial Number: FOXXXXXXXGS
      Is Monitored: true
            Reason: None
  Software Version: Cisco Nexus Operating System (NX-OS)
Software, Version
                    9.3(4)
    Version Source: CDP
cs2                         cluster-network    10.233.205.93
NX3232C
     Serial Number: FOXXXXXXXGD
      Is Monitored: true
            Reason: None
  Software Version: Cisco Nexus Operating System (NX-OS)
Software, Version
                    9.3(4)
    Version Source: CDP
2 entries were displayed.
```

3. Disable auto-revert on the cluster LIFs.

```
cluster1::*> network interface modify -vserver Cluster -lif * -auto
-revert false
```

Step 2: Configure ports

1. On cluster switch cs2, shut down the ports connected to the cluster ports of the nodes.

```
cs2> enable
cs2# configure
cs2(config)# interface eth1/1/1-2,eth1/7-8
cs2(config-if-range)# shutdown
cs2(config-if-range)# exit
cs2# exit
```

Make sure to shutdown **all** connected cluster ports to avoid any network connection issues. See the Knowledge Base article Node out of quorum when migrating cluster LIF during switch OS upgrade for further details.

2. Verify that the cluster ports have failed over to the ports hosted on cluster switch cs1. This might take a few seconds.

   ```
   network interface show -role cluster
   ```

Show example

```
cluster1::*> network interface show -role cluster
            Logical           Status     Network            Current
Current Is
Vserver     Interface         Admin/Oper Address/Mask       Node
Port    Home
----------- ----------------- ---------- ------------------
------------ ------- ----
Cluster
            cluster1-01_clus1 up/up      169.254.3.4/23
cluster1-01   e0a     true
            cluster1-01_clus2 up/up      169.254.3.5/23
cluster1-01   e0a     false
            cluster1-02_clus1 up/up      169.254.3.8/23
cluster1-02   e0a     true
            cluster1-02_clus2 up/up      169.254.3.9/23
cluster1-02   e0a     false
            cluster1-03_clus1 up/up      169.254.1.3/23
cluster1-03   e0a     true
            cluster1-03_clus2 up/up      169.254.1.1/23
cluster1-03   e0a     false
            cluster1-04_clus1 up/up      169.254.1.6/23
cluster1-04   e0a     true
            cluster1-04_clus2 up/up      169.254.1.7/23
cluster1-04   e0a     false
8 entries were displayed.
cluster1::*>
```

3. Verify that the cluster is healthy:

   `cluster show`

Show example

```
cluster1::*> cluster show
Node                  Health  Eligibility   Epsilon
--------------------- ------- ------------  -------
cluster1-01           true    true          false
cluster1-02           true    true          false
cluster1-03           true    true          true
cluster1-04           true    true          false
4 entries were displayed.
cluster1::*>
```

4. If you have not already done so, save a copy of the current switch configuration by copying the output of the following command to a text file:

   `show running-config`

5. Record any custom additions between the current `running-config` and the RCF file in use (such as an SNMP configuration for your organization).
6. Save basic configuration details to the `write_erase.cfg` file on the bootflash.

   Make sure to configure the following:
   * Username and password
   * Management IP address
   * Default gateway
   * Switch name

   ```
   cs2# show run | section "switchname" > bootflash:write_erase.cfg

   cs2# show run | section "hostname" >> bootflash:write_erase.cfg

   cs2# show run | i "username admin password" >> bootflash:write_erase.cfg

   cs2# show run | section "vrf context management" >> bootflash:write_erase.cfg

   cs2# show run | section "interface mgmt0" >> bootflash:write_erase.cfg
   ```

7. When upgrading to RCF version 1.12 and later, run the following commands:

   ```
   cs2# echo "hardware access-list tcam region racl-lite 512" >>
   bootflash:write_erase.cfg

   cs2# echo "hardware access-list tcam region qos 256" >>
   bootflash:write_erase.cfg
   ```

8. Verify that the `write_erase.cfg` file is populated as expected:

   `show file bootflash:write_erase.cfg`

9. Issue the `write erase` command to erase the current saved configuration:

```
cs2# write erase

Warning: This command will erase the startup-configuration.

Do you wish to proceed anyway? (y/n) [n] y
```

10. Copy the previously saved basic configuration into the startup configuration.

```
cs2# copy bootflash:write_erase.cfg startup-config
```

11. Reboot the switch cs2:

```
cs2# reload

This command will reboot the system. (y/n)? [n] y
```

12. After the management IP address is reachable again, log in to the switch through SSH.

    You may need to update host file entries related to the SSH keys.

13. Copy the RCF to the bootflash of switch cs2 using one of the following transfer protocols: FTP, TFTP, SFTP, or SCP. For more information on Cisco commands, see the appropriate guide in the Cisco Nexus 3000 Series NX-OS Command Reference guides.

    Show example

    This example shows TFTP being used to copy an RCF to the bootflash on switch cs2:

```
cs2# copy tftp: bootflash: vrf management
Enter source filename: Nexus_3232C_RCF_v1.6-Cluster-HA-Breakout.txt
Enter hostname for the tftp server: 172.22.201.50
Trying to connect to tftp server......Connection to Server
Established.
TFTP get operation was successful
Copy complete, now saving to disk (please wait)...
```

14. Apply the RCF previously downloaded to the bootflash.

    For more information on Cisco commands, see the appropriate guide in the Cisco Nexus 3000 Series NX-OS Command Reference guides.

Show example

This example shows the RCF file `Nexus_3232C_RCF_v1.6-Cluster-HA-Breakout.txt` being installed on switch cs2:

```
cs2# copy Nexus_3232C_RCF_v1.6-Cluster-HA-Breakout.txt running-
config echo-commands
```

Make sure to read thoroughly the **Installation notes**, **Important Notes**, and **banner** sections of your RCF. You must read and follow these instructions to ensure the proper configuration and operation of the switch.

15. Verify that the RCF file is the correct newer version:

    `show running-config`

    When you check the output to verify you have the correct RCF, make sure that the following information is correct:

    - The RCF banner
    - The node and port settings
    - Customizations

      The output varies according to your site configuration. Check the port settings and refer to the release notes for any changes specific to the RCF that you have installed.

16. Reapply any previous customizations to the switch configuration. Refer to Review cabling and configuration considerations for details of any further changes required.
17. After you verify the RCF versions and switch settings are correct, copy the running-config file to the startup-config file.

    For more information on Cisco commands, see the appropriate guide in the Cisco Nexus 3000 Series NX-OS Command Reference guides.

    ```
    cs2# copy running-config startup-config
    [########################################] 100% Copy complete
    ```

18. Reboot switch cs2. You can ignore the "cluster ports down" events reported on the nodes while the switch reboots.

    ```
    cs2# reload
    This command will reboot the system. (y/n)?  [n] y
    ```

19. Verify the health of cluster ports on the cluster.

    a. Verify that e0d ports are up and healthy across all nodes in the cluster:

```
network port show -role cluster
```

Show example

```
cluster1::*> network port show -role cluster
Node: cluster1-01

Ignore
                                                  Speed(Mbps)
Health   Health
Port      IPspace      Broadcast Domain Link MTU  Admin/Oper
Status   Status
--------- ------------ ---------------- ---- ---- -----------
-------- ------
e0a       Cluster      Cluster          up   9000  auto/10000
healthy  false
e0b       Cluster      Cluster          up   9000  auto/10000
healthy  false
Node: cluster1-02

Ignore
                                                  Speed(Mbps)
Health   Health
Port      IPspace      Broadcast Domain Link MTU  Admin/Oper
Status   Status
--------- ------------ ---------------- ---- ---- -----------
-------- ------
e0a       Cluster      Cluster          up   9000  auto/10000
healthy  false
e0b       Cluster      Cluster          up   9000  auto/10000
healthy  false
Node: cluster1-03

Ignore
                                                  Speed(Mbps)
Health   Health
Port      IPspace      Broadcast Domain Link MTU  Admin/Oper
Status   Status
--------- ------------ ---------------- ---- ---- -----------
-------- ------
e0a       Cluster      Cluster          up   9000  auto/100000
healthy false
e0d       Cluster      Cluster          up   9000  auto/100000
healthy false
Node: cluster1-04

Ignore
                                                  Speed(Mbps)
```

```
Health   Health
Port      IPspace      Broadcast Domain Link MTU  Admin/Oper
Status   Status
--------- ------------ ---------------- ---- ---- -----------
-------- ------
e0a       Cluster      Cluster          up   9000  auto/100000
healthy false
e0d       Cluster      Cluster          up   9000  auto/100000
healthy false
8 entries were displayed.
```

b. Verify the switch health from the cluster (this might not show switch cs2, since LIFs are not homed on e0d).

Show example

```
cluster1::*> network device-discovery show -protocol cdp
Node/       Local  Discovered
Protocol    Port   Device (LLDP: ChassisID)  Interface
Platform
----------- ------ ------------------------- -----------------
--------
cluster1-01/cdp
            e0a    cs1                       Ethernet1/7
N3K-C3232C
            e0d    cs2                       Ethernet1/7
N3K-C3232C
cluster01-2/cdp
            e0a    cs1                       Ethernet1/8
N3K-C3232C
            e0d    cs2                       Ethernet1/8
N3K-C3232C
cluster01-3/cdp
            e0a    cs1                       Ethernet1/1/1
N3K-C3232C
            e0b    cs2                       Ethernet1/1/1
N3K-C3232C
cluster1-04/cdp
            e0a    cs1                       Ethernet1/1/2
N3K-C3232C
            e0b    cs2                       Ethernet1/1/2
N3K-C3232C
cluster1::*> system cluster-switch show -is-monitoring-enabled
-operational true
Switch                       Type               Address
Model
---------------------------- ------------------ ----------------
-----
cs1                          cluster-network    10.233.205.90
N3K-C3232C
     Serial Number: FOXXXXXXXGD
      Is Monitored: true
            Reason: None
  Software Version: Cisco Nexus Operating System (NX-OS)
Software, Version
                    9.3(4)
    Version Source: CDP
cs2                          cluster-network    10.233.205.91
N3K-C3232C
     Serial Number: FOXXXXXXXGS
```

```
      Is Monitored: true
            Reason: None
  Software Version: Cisco Nexus Operating System (NX-OS)
Software, Version
                    9.3(4)
    Version Source: CDP
2 entries were displayed.
```

You might observe the following output on the cs1 switch console depending on the RCF version previously loaded on the switch
2020 Nov 17 16:07:18 cs1 %$ VDC-1 %$ %STP-2-UNBLOCK_CONSIST_PORT: Unblocking port port-channel1 on VLAN0092. Port consistency restored.
2020 Nov 17 16:07:23 cs1 %$ VDC-1 %$ %STP-2-BLOCK_PVID_PEER: Blocking port-channel1 on VLAN0001. Inconsistent peer vlan.
2020 Nov 17 16:07:23 cs1 %$ VDC-1 %$ %STP-2-BLOCK_PVID_LOCAL: Blocking port-channel1 on VLAN0092. Inconsistent local vlan.

It can take up to 5 minutes for the cluster nodes to report as healthy.

20. On cluster switch cs1, shut down the ports connected to the cluster ports of the nodes.

Show example

The following example uses the interface example output from step 1:

```
cs1(config)# interface eth1/1/1-2,eth1/7-8
cs1(config-if-range)# shutdown
```

21. Verify that the cluster LIFs have migrated to the ports hosted on switch cs2. This might take a few seconds.

```
network interface show -role cluster
```

Show example

```
cluster1::*> network interface show -role cluster
            Logical            Status     Network            Current
Current Is
Vserver     Interface          Admin/Oper Address/Mask       Node
Port    Home
----------- ------------------ ---------- ------------------
------------------- ------- ----
Cluster
            cluster1-01_clus1  up/up      169.254.3.4/23
cluster1-01         e0d     false
            cluster1-01_clus2  up/up      169.254.3.5/23
cluster1-01         e0d     true
            cluster1-02_clus1  up/up      169.254.3.8/23
cluster1-02         e0d     false
            cluster1-02_clus2  up/up      169.254.3.9/23
cluster1-02         e0d     true
            cluster1-03_clus1  up/up      169.254.1.3/23
cluster1-03         e0b     false
            cluster1-03_clus2  up/up      169.254.1.1/23
cluster1-03         e0b     true
            cluster1-04_clus1  up/up      169.254.1.6/23
cluster1-04         e0b     false
            cluster1-04_clus2  up/up      169.254.1.7/23
cluster1-04         e0b     true
8 entries were displayed.
cluster1::*>
```

22. Verify that the cluster is healthy:

```
cluster show
```

Show example

```
cluster1::*> cluster show
Node                 Health   Eligibility   Epsilon
-------------------- -------- ------------- -------
cluster1-01          true     true          false
cluster1-02          true     true          false
cluster1-03          true     true          true
cluster1-04          true     true          false
4 entries were displayed.
cluster1::*>
```

23. Repeat Steps 4 to 19 on switch cs1.
24. Enable auto-revert on the cluster LIFs.

```
cluster1::*> network interface modify -vserver Cluster -lif * -auto
-revert true
```

Step 3: Verify the cluster network configuration and cluster health

1. Verify that the switch ports connected to the cluster ports are **up**.

   ```
   show interface brief | grep up
   ```

   Show example

   ```
   cs1# show interface brief | grep up
   .
   .
   Eth1/1/1      1       eth  access up      none
   10G(D) --
   Eth1/1/2      1       eth  access up      none
   10G(D) --
   Eth1/7        1       eth  trunk  up      none
   100G(D) --
   Eth1/8        1       eth  trunk  up      none
   100G(D) --
   .
   .
   ```

2. Verify that the ISL between cs1 and cs2 is functional:

```
show port-channel summary
```

Show example

```
cs1# show port-channel summary
Flags:  D - Down        P - Up in port-channel (members)
        I - Individual  H - Hot-standby (LACP only)
        s - Suspended   r - Module-removed
        b - BFD Session Wait
        S - Switched    R - Routed
        U - Up (port-channel)
        p - Up in delay-lacp mode (member)
        M - Not in use. Min-links not met
--------------------------------------------------------------------------
------------
Group Port-       Type     Protocol  Member Ports
      Channel
--------------------------------------------------------------------------
------------
1     Po1(SU)     Eth      LACP      Eth1/31(P)   Eth1/32(P)
cs1#
```

3. Verify that the cluster LIFs have reverted to their home port:

```
network interface show -role cluster
```

Show example

```
cluster1::*> network interface show -role cluster
            Logical            Status     Network            Current
Current Is
Vserver     Interface          Admin/Oper Address/Mask       Node
Port    Home
----------- ------------------ ---------- ------------------
------------------- ------- ----
Cluster
            cluster1-01_clus1  up/up      169.254.3.4/23
cluster1-01         e0d     true
            cluster1-01_clus2  up/up      169.254.3.5/23
cluster1-01         e0d     true
            cluster1-02_clus1  up/up      169.254.3.8/23
cluster1-02         e0d     true
            cluster1-02_clus2  up/up      169.254.3.9/23
cluster1-02         e0d     true
            cluster1-03_clus1  up/up      169.254.1.3/23
cluster1-03         e0b     true
            cluster1-03_clus2  up/up      169.254.1.1/23
cluster1-03         e0b     true
            cluster1-04_clus1  up/up      169.254.1.6/23
cluster1-04         e0b     true
            cluster1-04_clus2  up/up      169.254.1.7/23
cluster1-04         e0b     true
8 entries were displayed.
cluster1::*>
```

If any cluster LIFS have not returned to their home ports, revert them manually:
`network interface revert -vserver` *`vserver_name`* `-lif` *`lif_name`*

4. Verify that the cluster is healthy:

   `cluster show`

Show example

```
cluster1::*> cluster show
Node                 Health  Eligibility   Epsilon
-------------------- ------- ------------- -------
cluster1-01          true    true          false
cluster1-02          true    true          false
cluster1-03          true    true          true
cluster1-04          true    true          false
4 entries were displayed.
cluster1::*>
```

5. Verify the connectivity of the remote cluster interfaces:

ONTAP 9.9.1 and later

You can use the `network interface check cluster-connectivity` command to start an accessibility check for cluster connectivity and then display the details: `network interface check cluster-connectivity start` and `network interface check cluster-connectivity show`

```
cluster1::*> network interface check cluster-connectivity start
```

NOTE: Wait for a number of seconds before running the `show` command to display the details.

```
cluster1::*> network interface check cluster-connectivity show
                                  Source              Destination
Packet
Node   Date                       LIF                 LIF
Loss
------ -------------------------- ------------------
------------------- -----------
cluster1-01
       3/5/2022 19:21:18 -06:00   cluster1-01_clus2   cluster1-02_clus1
none
       3/5/2022 19:21:20 -06:00   cluster1-01_clus2   cluster1-02_clus2
none
.
.
cluster1-02
       3/5/2022 19:21:18 -06:00   cluster1-02_clus2   cluster1-01_clus1
none
       3/5/2022 19:21:20 -06:00   cluster1-02_clus2   cluster1-01_clus2
none
.
.
cluster1-03
.
.
.
.
cluster1-04
.
.
.
.
```

All ONTAP releases

For all ONTAP releases, you can also use the `cluster ping-cluster -node <name>` command to

check the connectivity:
`cluster ping-cluster -node <name>`

```
cluster1::*> cluster ping-cluster -node local
Host is cluster1-03
Getting addresses from network interface table...
Cluster cluster1-03_clus1 169.254.1.3 cluster1-03 e0a
Cluster cluster1-03_clus2 169.254.1.1 cluster1-03 e0b
Cluster cluster1-04_clus1 169.254.1.6 cluster1-04 e0a
Cluster cluster1-04_clus2 169.254.1.7 cluster1-04 e0b
Cluster cluster1-01_clus1 169.254.3.4 cluster1-01 e0a
Cluster cluster1-01_clus2 169.254.3.5 cluster1-01 e0d
Cluster cluster1-02_clus1 169.254.3.8 cluster1-02 e0a
Cluster cluster1-02_clus2 169.254.3.9 cluster1-02 e0d
Local = 169.254.1.3 169.254.1.1
Remote = 169.254.1.6 169.254.1.7 169.254.3.4 169.254.3.5 169.254.3.8
169.254.3.9
Cluster Vserver Id = 4294967293
Ping status:
............
Basic connectivity succeeds on 12 path(s)
Basic connectivity fails on 0 path(s)
................................................
Detected 9000 byte MTU on 12 path(s):
    Local 169.254.1.3 to Remote 169.254.1.6
    Local 169.254.1.3 to Remote 169.254.1.7
    Local 169.254.1.3 to Remote 169.254.3.4
    Local 169.254.1.3 to Remote 169.254.3.5
    Local 169.254.1.3 to Remote 169.254.3.8
    Local 169.254.1.3 to Remote 169.254.3.9
    Local 169.254.1.1 to Remote 169.254.1.6
    Local 169.254.1.1 to Remote 169.254.1.7
    Local 169.254.1.1 to Remote 169.254.3.4
    Local 169.254.1.1 to Remote 169.254.3.5
    Local 169.254.1.1 to Remote 169.254.3.8
    Local 169.254.1.1 to Remote 169.254.3.9
Larger than PMTU communication succeeds on 12 path(s)
RPC status:
6 paths up, 0 paths down (tcp check)
6 paths up, 0 paths down (udp check)
```

What's next?

After you've upgraded your RCF, you can verify the SSH configuration.

Verify your SSH configuration

If you are using the Ethernet Switch Health Monitor (CSHM) and log collection features, verify that SSH and SSH keys are enabled on the cluster switches.

Steps

1. Verify that SSH is enabled:

```
(switch) show ssh server
ssh version 2 is enabled
```

2. Verify that the SSH keys are enabled:

```
show ssh key
```

Show example

```
(switch)# show ssh key

rsa Keys generated:Fri Jun 28 02:16:00 2024

ssh-rsa
AAAAB3NzaC1yc2EAAAADAQABAAAAgQDiNrD52Q586wTGJjFAbjBlFaA23EpDrZ2sDCew
l7nwlioC6HBejxluIObAH8hrW8kR+gj0ZAfPpNeLGTg3APj/yiPTBoIZZxbWRShywAM5
PqyxWwRb7kp9Zt1YHzVuHYpSO82KUDowKrL6lox/YtpKoZUDZjrZjAp8hTv3JZsPgQ==

bitcount:1024
fingerprint:
SHA256:aHwhpzo7+YCDSrp3isJv2uVGz+mjMMokqdMeXVVXfdo

could not retrieve dsa key information

ecdsa Keys generated:Fri Jun 28 02:30:56 2024

ecdsa-sha2-nistp521
AAAAE2VjZHNhLXNoYTItbmlzdHA1MjEAAAAIbmlzdHA1MjEAAACFBABJ+ZX5SFKhS57e
vkE273e0VoqZi4/32dt+f14fBuKv80MjMsmLfjKtCWy1wgVt1Zi+C5TIBbugpzez529z
kFSF0ADb8JaGCoaAYe2HvWR/f6QLbKbqVIewCdqWgxzrIY5BPP5GBdxQJMBiOwEdnHg1
u/9Pzh/Vz9cHDcCW9qGE780QHA==

bitcount:521
fingerprint:
SHA256:TFGe2hXn6QIpcs/vyHzftHJ7Dceg0vQaULYRAlZeHwQ

(switch)# show feature | include scpServer
scpServer             1          enabled
(switch)# show feature | include ssh
sshServer             1          enabled
(switch)#
```

When enabling FIPS, you must change the bitcount to 256 on the switch using the command `ssh key ecdsa 256 force`. See Configure network security using FIPS for more details.

What's next?

After you've verified your SSH configuration, you can configure switch health monitoring.

Reset the 3232C cluster switch to factory defaults

To reset the 3232C cluster switch to factory defaults, you must erase the 3232C switch

settings.

About this task

- You must be connected to the switch using the serial console.
- This task resets the configuration of the management network.

Steps

1. Erase the existing configuration:

   `write erase`

   ```
   (cs2)# write erase

   Warning: This command will erase the startup-configuration.
   Do you wish to proceed anyway? (y/n) [n] y
   ```

2. Reload the switch software:

   `reload`

   ```
   (cs2)# reload

   This command will reboot the system. (y/n)? [n] y
   ```

   The system reboots and enters the configuration wizard. During the boot, if you receive the prompt “Abort Auto Provisioning and continue with normal setup? (yes/no)[n]”, you should respond **yes** to proceed.

What’s next

After resetting the switch, you can reconfigure it according to your requirements.

Migrate switches

Migrate from two-node switchless clusters

Migrate from a two-node switchless cluster workflow

Follow these workflow steps to migrate from a two-node switchless cluster to a cluster with Cisco Nexus 3232C cluster switches.

1 **Migration requirements**

Review the example switch information for the migration process.

2 **Prepare for migration**

Prepare your two-node switchless cluster for migration to a two-node switched cluster.

3 Configure your ports

Configure your two-node switchless cluster for migration to a two-node switched cluster.

4 Complete your migration

Complete you migration to a two-node switched cluster.

Migration requirements

If you have a two-node switchless cluster, you can migrate to a two-node switched cluster that includes Cisco Nexus 3232C cluster network switches. This is a nondisruptive procedure.

Before you begin

Verify the following installations and connections:

- Ports are available for node connections. The cluster switches use the Inter-Switch Link (ISL) ports e1/31-32.
- You have appropriate cables for cluster connections:
  - The nodes with 10 GbE cluster connections require QSFP optical modules with breakout fiber cables or QSFP to SFP+ copper breakout cables.
  - The nodes with 40/100 GbE cluster connections require supported QSFP/QSFP28 optical modules with fiber cables or QSFP/QSFP28 copper direct-attach cables.
  - The cluster switches require the appropriate ISL cabling:
    - 2x QSFP28 fiber or copper direct-attach cables.
- The configurations are properly set up and functioning.

  The two nodes must be connected and functioning in a two-node switchless cluster setting.
- All cluster ports are in the **up** state.
- The Cisco Nexus 3232C cluster switch are supported.
- The existing cluster network configuration has the following:
  - A redundant and fully functional Nexus 3232C cluster infrastructure on both switches
  - The latest RCF and NX-OS versions on your switches
  - Management connectivity on both switches
  - Console access to both switches
  - All cluster logical interfaces (LIFs) in the **up** state without having been migrated
  - Initial customization of the switch
  - All ISL ports enabled and cabled

About the examples used

The examples in this procedure use the following switch and node nomenclature:

- Nexus 3232C cluster switches, **C1** and **C2**.

- The nodes are **n1** and **n2**.

The examples in this procedure use two nodes, each using two 40 GbE cluster interconnect ports **e4a** and **e4e**. The *Hardware Universe* has details about the cluster ports on your platforms.

- **n1_clus1** is the first cluster logical interface (LIF) to be connected to cluster switch **C1** for node **n1**.
- **n1_clus2** is the first cluster LIF to be connected to cluster switch **C2** for node **n1**.
- **n2_clus1** is the first cluster LIF to be connected to cluster switch **C1** for node **n2**.
- **n2_clus2** is the second cluster LIF to be connected to cluster switch **C2** for node **n2**.
- The number of 10 GbE and 40/100 GbE ports are defined in the reference configuration files (RCFs) available on the Cisco® Cluster Network Switch Reference Configuration File Download page.

The procedure requires the use of both ONTAP commands and Cisco Nexus 3000 Series Switches commands; ONTAP commands are used unless otherwise indicated.

What's next?

After you've reviewed the migration requirements, you can prepare to migrate your switches.

Prepare for migration from two-node switchless clusters to two-node switched clusters

Follow these steps to prepare your two-node switchless cluster to migrate to a two-node switched cluster that includes Cisco Nexus 3232C cluster network switches.

Steps

1. If AutoSupport is enabled on this cluster, suppress automatic case creation by invoking an AutoSupport message:

   ```
   system node autosupport invoke -node * -type all - message MAINT=xh
   ```

   x is the duration of the maintenance window in hours.

   The AutoSupport message notifies technical support of this maintenance task so that automatic case creation is suppressed during the maintenance window.

2. Determine the administrative or operational status for each cluster interface:
   a. Display the network port attributes:

      ```
      network port show -role cluster
      ```

Show example

```
cluster::*> network port show -role cluster
  (network port show)
Node: n1

Ignore
                                                        Speed(Mbps)
Health   Health
Port      IPspace      Broadcast Domain Link MTU  Admin/Oper
Status   Status
--------- ------------ ---------------- ---- ---- -----------
-------- -----
e4a       Cluster      Cluster          up   9000 auto/40000  -
e4e       Cluster      Cluster          up   9000 auto/40000  -
-
Node: n2

Ignore
                                                        Speed(Mbps)
Health   Health
Port      IPspace      Broadcast Domain Link MTU  Admin/Oper
Status   Status
--------- ------------ ---------------- ---- ---- -----------
-------- -----
e4a       Cluster      Cluster          up   9000 auto/40000  -
e4e       Cluster      Cluster          up   9000 auto/40000  -
4 entries were displayed.
```

b. Display information about the logical interfaces and their designated home nodes:

```
network interface show -role cluster
```

Show example

```
cluster::*> network interface show -role cluster
 (network interface show)
            Logical    Status     Network            Current
Current Is
Vserver     Interface  Admin/Oper Address/Mask       Node
Port    Home
----------- ---------- ---------- ------------------
------------ ------- ---
Cluster
            n1_clus1   up/up      10.10.0.1/24       n1
e4a     true
            n1_clus2   up/up      10.10.0.2/24       n1
e4e     true
            n2_clus1   up/up      10.10.0.3/24       n2
e4a     true
            n2_clus2   up/up      10.10.0.4/24       n2
e4e     true

4 entries were displayed.
```

c. Verify that switchless cluster detection is enabled using the advanced privilege command:

`network options detect-switchless-cluster show`

Show example

The output in the following example shows that switchless cluster detection is enabled:

```
cluster::*> network options detect-switchless-cluster show
Enable Switchless Cluster Detection: true
```

3. Verify that the appropriate RCFs and image are installed on the new 3232C switches and make any necessary site customizations such as adding users, passwords, and network addresses.

   You must prepare both switches at this time. If you need to upgrade the RCF and image software, you must follow these steps:

   a. Go to the *Cisco Ethernet Switches* page on the NetApp Support Site.

      Cisco Ethernet Switches

   b. Note your switch and the required software versions in the table on that page.

   c. Download the appropriate version of RCF.

d. Select **CONTINUE** on the **Description** page, accept the license agreement, and then follow the instructions on the **Download** page to download the RCF.

e. Download the appropriate version of the image software.

Cisco Cluster and Management Network Switch Reference Configuration File Download

4. Select **CONTINUE** on the **Description** page, accept the license agreement, and then follow the instructions on the **Download** page to download the RCF.
5. On Nexus 3232C switches C1 and C2, disable all node-facing ports C1 and C2, but do not disable the ISL ports e1/31-32.

   For more information on Cisco commands, see the following list in the Cisco Nexus 3000 Series NX-OS Command References.

   Show example

   The following example shows ports 1 through 30 being disabled on Nexus 3232C cluster switches C1 and C2 using a configuration supported in RCF `NX3232_RCF_v1.0_24p10g_24p100g.txt`:

```
C1# copy running-config startup-config
[] 100% Copy complete.
C1# configure
C1(config)# int e1/1/1-4,e1/2/1-4,e1/3/1-4,e1/4/1-4,e1/5/1-4,e1/6/1-
4,e1/7-30
C1(config-if-range)# shutdown
C1(config-if-range)# exit
C1(config)# exit
C2# copy running-config startup-config
[] 100% Copy complete.
C2# configure
C2(config)# int e1/1/1-4,e1/2/1-4,e1/3/1-4,e1/4/1-4,e1/5/1-4,e1/6/1-
4,e1/7-30
C2(config-if-range)# shutdown
C2(config-if-range)# exit
C2(config)# exit
```

6. Connect ports 1/31 and 1/32 on C1 to the same ports on C2 using supported cabling.
7. Verify that the ISL ports are operational on C1 and C2:

   `show port-channel summary`

   For more information on Cisco commands, see the following list in the Cisco Nexus 3000 Series NX-OS Command References.

Show example

The following example shows the Cisco `show port-channel summary` command being used to verify the ISL ports are operational on C1 and C2:

```
C1# show port-channel summary
Flags: D - Down         P - Up in port-channel (members)
       I - Individual   H - Hot-standby (LACP only)        s -
Suspended    r - Module-removed
       S - Switched     R - Routed
       U - Up (port-channel)
       M - Not in use. Min-links not met
------------------------------------------------------------------------
------------
      Port-
Group Channel      Type   Protocol  Member Ports
------------------------------------------------------------------------
-----------
1     Po1(SU)      Eth    LACP      Eth1/31(P)   Eth1/32(P)

C2# show port-channel summary
Flags: D - Down         P - Up in port-channel (members)
       I - Individual   H - Hot-standby (LACP only)        s -
Suspended    r - Module-removed
       S - Switched     R - Routed
       U - Up (port-channel)
       M - Not in use. Min-links not met
------------------------------------------------------------------------
------------

Group Port-        Type   Protocol  Member Ports
      Channel
------------------------------------------------------------------------
------------
1     Po1(SU)      Eth    LACP      Eth1/31(P)   Eth1/32(P)
```

8. Display the list of neighboring devices on the switch.

   For more information on Cisco commands, see the following list in the Cisco Nexus 3000 Series NX-OS Command References.

Show example

The following example shows the Cisco command `show cdp neighbors` being used to display the neighboring devices on the switch:

```
C1# show cdp neighbors
Capability Codes: R - Router, T - Trans-Bridge, B - Source-Route-
Bridge
                  S - Switch, H - Host, I - IGMP, r - Repeater,
                  V - VoIP-Phone, D - Remotely-Managed-Device,
s - Supports-STP-Dispute
Device-ID          Local Intrfce  Hldtme Capability  Platform
Port ID
C2                 Eth1/31        174    R S I s     N3K-C3232C
Eth1/31
C2                 Eth1/32        174    R S I s     N3K-C3232C
Eth1/32
Total entries displayed: 2
C2# show cdp neighbors
Capability Codes: R - Router, T - Trans-Bridge, B - Source-Route-
Bridge
                  S - Switch, H - Host, I - IGMP, r - Repeater,
                  V - VoIP-Phone, D - Remotely-Managed-Device,
s - Supports-STP-Dispute
Device-ID          Local Intrfce  Hldtme Capability  Platform
Port ID
C1                 Eth1/31        178    R S I s     N3K-C3232C
Eth1/31
C1                 Eth1/32        178    R S I s     N3K-C3232C
Eth1/32
Total entries displayed: 2
```

9. Display the cluster port connectivity on each node:

   `network device-discovery show`

Show example

The following example shows the cluster port connectivity displayed for a two-node switchless cluster configuration:

```
cluster::*> network device-discovery show
            Local  Discovered
Node        Port   Device               Interface        Platform
----------- ------ -------------------- ---------------- ----------------
n1         /cdp
            e4a    n2                   e4a              FAS9000
            e4e    n2                   e4e              FAS9000
n2         /cdp
            e4a    n1                   e4a              FAS9000
            e4e    n1                   e4e              FAS9000
```

What's next?

After you've prepared to migrate your switches, you can configure your ports.

Configure your ports for migration from a two-node switchless cluster to a two-node switched cluster

Follow these steps to configure your ports for migration from a two-node switchless cluster to a two-node switched cluster on Nexus 3232C switches.

Steps

1. Migrate the n1_clus1 and n2_clus1 LIFs to the physical ports of their destination nodes:

   `network interface migrate -vserver` *`vserver-name`* `-lif` *`lif-name`* `source-node` *`source-node-name`* `-destination-port` *`destination-port-name`*

   Show example

   You must execute the command for each local node as shown in the following example:

   ```
   cluster::*> network interface migrate -vserver cluster -lif n1_clus1
   -source-node n1
   -destination-node n1 -destination-port e4e
   cluster::*> network interface migrate -vserver cluster -lif n2_clus1
   -source-node n2
   -destination-node n2 -destination-port e4e
   ```

2. Verify the cluster interfaces have successfully migrated:

   `network interface show -role cluster`

Show example

The following example shows the "Is Home" status for the n1_clus1 and n2_clus1 LIFs has become "false" after the migration is completed:

```
cluster::*> network interface show -role cluster
 (network interface show)
            Logical    Status     Network            Current
Current Is
Vserver     Interface  Admin/Oper Address/Mask       Node
Port    Home
----------- ---------- ---------- ------------------ -------------
------- ----
Cluster
            n1_clus1   up/up      10.10.0.1/24       n1
e4e     false
            n1_clus2   up/up      10.10.0.2/24       n1
e4e     true
            n2_clus1   up/up      10.10.0.3/24       n2
e4e     false
            n2_clus2   up/up      10.10.0.4/24       n2
e4e     true
 4 entries were displayed.
```

3. Shut down cluster ports for the n1_clus1 and n2_clus1 LIFs, which were migrated in step 9:

   `network port modify -node` *`node-name`* `-port` *`port-name`* `-up-admin false`

   Show example

   You must execute the command for each port as shown in the following example:

   ```
   cluster::*> network port modify -node n1 -port e4a -up-admin false
   cluster::*> network port modify -node n2 -port e4a -up-admin false
   ```

4. Verify the connectivity of the remote cluster interfaces:

ONTAP 9.9.1 and later

You can use the `network interface check cluster-connectivity` command to start an accessibility check for cluster connectivity and then display the details:

`network interface check cluster-connectivity start` and `network interface check cluster-connectivity show`

```
cluster1::*> network interface check cluster-connectivity start
```

NOTE: Wait for a number of seconds before running the `show` command to display the details.

```
cluster1::*> network interface check cluster-connectivity show
                                  Source           Destination
Packet
Node   Date                       LIF              LIF
Loss
------ -------------------------- ---------------- ----------------
-----------
n1
       3/5/2022 19:21:18 -06:00   n1_clus2         n2-clus1
none
       3/5/2022 19:21:20 -06:00   n1_clus2         n2_clus2
none

n2
       3/5/2022 19:21:18 -06:00   n2_clus2         n1_clus1
none
       3/5/2022 19:21:20 -06:00   n2_clus2         n1_clus2
none
```

All ONTAP releases

For all ONTAP releases, you can also use the `cluster ping-cluster -node <name>` command to check the connectivity:

```
cluster ping-cluster -node <name>
```

```
cluster1::*> cluster ping-cluster -node local
Host is n1
Getting addresses from network interface table...
Cluster n1_clus1 n1        e4a    10.10.0.1
Cluster n1_clus2 n1        e4e    10.10.0.2
Cluster n2_clus1 n2        e4a    10.10.0.3
Cluster n2_clus2 n2        e4e    10.10.0.4
Local = 10.10.0.1 10.10.0.2
Remote = 10.10.0.3 10.10.0.4
Cluster Vserver Id = 4294967293
Ping status:....
Basic connectivity succeeds on 4 path(s)
Basic connectivity fails on 0 path(s) ................
Detected 9000 byte MTU on 32 path(s):
    Local 10.10.0.1 to Remote 10.10.0.3
    Local 10.10.0.1 to Remote 10.10.0.4
    Local 10.10.0.2 to Remote 10.10.0.3
    Local 10.10.0.2 to Remote 10.10.0.4
Larger than PMTU communication succeeds on 4 path(s) RPC status:
1 paths up, 0 paths down (tcp check)
1 paths up, 0 paths down (ucp check)
```

5. Disconnect the cable from e4a on node n1.

   You can refer to the running configuration and connect the first 40 GbE port on the switch C1 (port 1/7 in this example) to e4a on n1 using cabling supported for Nexus 3232C switches.

6. Disconnect the cable from e4a on node n2.

   You can refer to the running configuration and connect e4a to the next available 40 GbE port on C1, port 1/8, using supported cabling.

7. Enable all node-facing ports on C1.

   For more information on Cisco commands, see the guides listed in the Cisco Nexus 3000 Series NX-OS Command References.

Show example

The following example shows ports 1 through 30 being enabled on Nexus 3232C cluster switches C1 and C2 using the configuration supported in RCF `NX3232_RCF_v1.0_24p10g_26p100g.txt`:

```
C1# configure
C1(config)# int e1/1/1-4,e1/2/1-4,e1/3/1-4,e1/4/1-4,e1/5/1-4,e1/6/1-
4,e1/7-30
C1(config-if-range)# no shutdown
C1(config-if-range)# exit
C1(config)# exit
```

8. Enable the first cluster port, e4a, on each node:

   `network port modify -node node-name -port port-name -up-admin true`

   Show example

   ```
   cluster::*> network port modify -node n1 -port e4a -up-admin true
   cluster::*> network port modify -node n2 -port e4a -up-admin true
   ```

9. Verify that the clusters are up on both nodes:

   `network port show -role cluster`

Show example

```
cluster::*> network port show -role cluster
  (network port show)
Node: n1

Ignore
                                                  Speed(Mbps) Health
Health
Port      IPspace      Broadcast Domain Link MTU  Admin/Oper  Status
Status
--------- ------------ ---------------- ---- ---- -----------
-------- -----
e4a       Cluster      Cluster          up   9000 auto/40000  -
e4e       Cluster      Cluster          up   9000 auto/40000  -
-

Node: n2

Ignore
                                                  Speed(Mbps) Health
Health
Port      IPspace      Broadcast Domain Link MTU  Admin/Oper  Status
Status
--------- ------------ ---------------- ---- ---- -----------
-------- -----
e4a       Cluster      Cluster          up   9000 auto/40000  -
e4e       Cluster      Cluster          up   9000 auto/40000  -

4 entries were displayed.
```

10. For each node, revert all of the migrated cluster interconnect LIFs:

    `network interface revert -vserver cluster -lif` *`lif-name`*

    Show example

    You must revert each LIF to its home port individually as shown in the following example:

    ```
    cluster::*> network interface revert -vserver cluster -lif n1_clus1
    cluster::*> network interface revert -vserver cluster -lif n2_clus1
    ```

11. Verify that all the LIFs are now reverted to their home ports:

`network interface show -role cluster`

The `Is Home` column should display a value of `true` for all of the ports listed in the `Current Port` column. If the displayed value is `false`, the port has not been reverted.

Show example

```
cluster::*> network interface show -role cluster
 (network interface show)
            Logical    Status     Network            Current
Current Is
Vserver     Interface  Admin/Oper Address/Mask       Node
Port    Home
----------- ---------- ---------- ------------------ -------------
------- ----
Cluster
            n1_clus1   up/up      10.10.0.1/24       n1
e4a     true
            n1_clus2   up/up      10.10.0.2/24       n1
e4e     true
            n2_clus1   up/up      10.10.0.3/24       n2
e4a     true
            n2_clus2   up/up      10.10.0.4/24       n2
e4e     true
4 entries were displayed.
```

12. Display the cluster port connectivity on each node:

`network device-discovery show`

Show example

```
cluster::*> network device-discovery show
            Local  Discovered
Node        Port   Device              Interface        Platform
----------- ------ ------------------ ----------------
----------------
n1         /cdp
            e4a    C1                 Ethernet1/7      N3K-C3232C
            e4e    n2                 e4e              FAS9000
n2         /cdp
            e4a    C1                 Ethernet1/8      N3K-C3232C
            e4e    n1                 e4e              FAS9000
```

13. Migrate clus2 to port e4a on the console of each node:

    `network interface migrate cluster -lif` *`lif-name`* `-source-node` *`source-node-name`* `-destination-node` *`destination-node-name`* `-destination-port` *`destination-port-name`*

    Show example

    You must migrate each LIF to its home port individually as shown in the following example:

    ```
    cluster::*> network interface migrate -vserver cluster -lif n1_clus2
    -source-node n1
    -destination-node n1 -destination-port e4a
    cluster::*> network interface migrate -vserver cluster -lif n2_clus2
    -source-node n2
    -destination-node n2 -destination-port e4a
    ```

14. Shut down cluster ports clus2 LIF on both nodes:

    `network port modify`

    Show example

    The following example shows the specified ports being set to `false`, shutting the ports down on both nodes:

    ```
    cluster::*> network port modify -node n1 -port e4e -up-admin false
    cluster::*> network port modify -node n2 -port e4e -up-admin false
    ```

15. Verify the cluster LIF status:

    `network interface show`

Show example

```
cluster::*> network interface show -role cluster
 (network interface show)
            Logical    Status     Network            Current
Current Is
Vserver     Interface  Admin/Oper Address/Mask       Node
Port    Home
----------- ---------- ---------- ------------------ -------------
------- ----
Cluster
            n1_clus1   up/up      10.10.0.1/24       n1
e4a     true
            n1_clus2   up/up      10.10.0.2/24       n1
e4a     false
            n2_clus1   up/up      10.10.0.3/24       n2
e4a     true
            n2_clus2   up/up      10.10.0.4/24       n2
e4a     false
4 entries were displayed.
```

16. Disconnect the cable from e4e on node n1.

    You can refer to the running configuration and connect the first 40 GbE port on switch C2 (port 1/7 in this example) to e4e on node n1, using the appropriate cabling for the Nexus 3232C switch model.

17. Disconnect the cable from e4e on node n2.

    You can refer to the running configuration and connect e4e to the next available 40 GbE port on C2, port 1/8, using the appropriate cabling for the Nexus 3232C switch model.

18. Enable all node-facing ports on C2.

    Show example

    The following example shows ports 1 through 30 being enabled on Nexus 3132Q-V cluster switches C1 and C2 using a configuration supported in RCF `NX3232C_RCF_v1.0_24p10g_26p100g.txt`:

    ```
    C2# configure
    C2(config)# int e1/1/1-4,e1/2/1-4,e1/3/1-4,e1/4/1-4,e1/5/1-4,e1/6/1-
    4,e1/7-30
    C2(config-if-range)# no shutdown
    C2(config-if-range)# exit
    C2(config)# exit
    ```

19. Enable the second cluster port, e4e, on each node:

    `network port modify`

    Show example

    The following example shows the second cluster port e4e being brought up on each node:

    ```
    cluster::*> network port modify -node n1 -port e4e -up-admin true
    cluster::*> *network port modify -node n2 -port e4e -up-admin true*s
    ```

20. For each node, revert all of the migrated cluster interconnect LIFs:

    `network interface revert`

    Show example

    The following example shows the migrated LIFs being reverted to their home ports.

    ```
    cluster::*> network interface revert -vserver Cluster -lif n1_clus2
    cluster::*> network interface revert -vserver Cluster -lif n2_clus2
    ```

What's next?

After you've configured your ports, you can complete your migration.

Complete your migration from a two-node switchless cluster to a two-node switched cluster

Complete the following steps to finalize the two-node switchless cluster migration to a two-node switched cluster on Nexus 3232C switches.

Steps

1. Verify that all of the cluster interconnect ports are now reverted to their home ports:

   `network interface show -role cluster`

   The `Is Home` column should display a value of `true` for all of the ports listed in the `Current Port` column. If the displayed value is `false`, the port has not been reverted.

Show example

```
cluster::*> network interface show -role cluster
 (network interface show)
            Logical    Status     Network            Current
Current Is
Vserver     Interface  Admin/Oper Address/Mask       Node
Port    Home
----------- ---------- ---------- ------------------ -------------
------- ----
Cluster
            n1_clus1   up/up      10.10.0.1/24       n1
e4a     true
            n1_clus2   up/up      10.10.0.2/24       n1
e4e     true
            n2_clus1   up/up      10.10.0.3/24       n2
e4a     true
            n2_clus2   up/up      10.10.0.4/24       n2
e4e     true
4 entries were displayed.
```

2. Verify that all of the cluster interconnect ports are in the `up` state:

   `network port show -role cluster`

3. Display the cluster switch port numbers through which each cluster port is connected to each node:

   `network device-discovery show`

Show example

```
cluster::*> network device-discovery show
            Local  Discovered
Node        Port   Device               Interface        Platform
----------- ------ ------------------ ----------------
----------------
n1          /cdp
            e4a    C1                 Ethernet1/7      N3K-C3232C
            e4e    C2                 Ethernet1/7      N3K-C3232C
n2          /cdp
            e4a    C1                 Ethernet1/8      N3K-C3232C
            e4e    C2                 Ethernet1/8      N3K-C3232C
```

4. Display discovered and monitored cluster switches:

   `system cluster-switch show`

   Show example

```
cluster::*> system cluster-switch show

Switch                      Type               Address
Model
--------------------------- ------------------ ----------------
---------------
C1                          cluster-network    10.10.1.101
NX3232CV
Serial Number: FOX000001
Is Monitored: true
Reason:
Software Version: Cisco Nexus Operating System (NX-OS) Software,
Version 7.0(3)I6(1)
Version Source: CDP

C2                          cluster-network     10.10.1.102
NX3232CV
Serial Number: FOX000002
Is Monitored: true
Reason:
Software Version: Cisco Nexus Operating System (NX-OS) Software,
Version 7.0(3)I6(1)
Version Source: CDP 2 entries were displayed.
```

5. Verify that switchless cluster detection changed the switchless cluster option to disabled:

   `network options switchless-cluster show`

6. Verify the connectivity of the remote cluster interfaces:

ONTAP 9.9.1 and later

You can use the `network interface check cluster-connectivity` command to start an accessibility check for cluster connectivity and then display the details:

`network interface check cluster-connectivity start` and `network interface check cluster-connectivity show`

```
cluster1::*> network interface check cluster-connectivity start
```

NOTE: Wait for a number of seconds before running the `show` command to display the details.

```
cluster1::*> network interface check cluster-connectivity show
                                  Source           Destination
Packet
Node   Date                       LIF              LIF
Loss
------ ------------------------- ---------------- ----------------
-----------
n1
       3/5/2022 19:21:18 -06:00   n1_clus2         n2-clus1
none
       3/5/2022 19:21:20 -06:00   n1_clus2         n2_clus2
none

n2
       3/5/2022 19:21:18 -06:00   n2_clus2         n1_clus1
none
       3/5/2022 19:21:20 -06:00   n2_clus2         n1_clus2
none
```

All ONTAP releases

For all ONTAP releases, you can also use the `cluster ping-cluster -node <name>` command to check the connectivity:

```
cluster ping-cluster -node <name>
```

```
cluster1::*> cluster ping-cluster -node local
Host is n1
Getting addresses from network interface table...
Cluster n1_clus1 n1        e4a    10.10.0.1
Cluster n1_clus2 n1        e4e    10.10.0.2
Cluster n2_clus1 n2        e4a    10.10.0.3
Cluster n2_clus2 n2        e4e    10.10.0.4
Local = 10.10.0.1 10.10.0.2
Remote = 10.10.0.3 10.10.0.4
Cluster Vserver Id = 4294967293
Ping status:....
Basic connectivity succeeds on 4 path(s)
Basic connectivity fails on 0 path(s) ................
Detected 9000 byte MTU on 32 path(s):
    Local 10.10.0.1 to Remote 10.10.0.3
    Local 10.10.0.1 to Remote 10.10.0.4
    Local 10.10.0.2 to Remote 10.10.0.3
    Local 10.10.0.2 to Remote 10.10.0.4
Larger than PMTU communication succeeds on 4 path(s) RPC status:
1 paths up, 0 paths down (tcp check)
1 paths up, 0 paths down (ucp check)
```

7. If you suppressed automatic case creation, re-enable it by invoking an AutoSupport message:

```
system node autosupport invoke -node * -type all -message MAINT=END
```

What's next?

After you've completed your switch migration, you can configure switch health monitoring.

Replace switches

Replace a Cisco Nexus 3232C cluster switch

Follow these steps to replace a defective Cisco Nexus 3232C switch in a cluster. This is a non-disruptive procedure.

Review requirements

What you'll need

Make sure that the existing cluster and network configuration has the following characteristics:

- The Nexus 3232C cluster infrastructure are redundant and fully functional on both switches.

  The Cisco Ethernet Switches page has the latest RCF and NX-OS versions on your switches.

- All cluster ports must be in the **up** state.

- Management connectivity must exist on both switches.
- All cluster logical interfaces (LIFs) are in the **up** state and are not migrated.

The replacement Cisco Nexus 3232C switch has the following characteristics:

- Management network connectivity is functional.
- Console access to the replacement switch is in place.
- The appropriate RCF and NX-OS operating system image is loaded onto the switch.
- Initial customization of the switch is complete.

For more information

See the following:

- Cisco Ethernet Switches
- Hardware Universe
- What additional information do I need to install my equipment that is not in HWU?

Enable console logging

NetApp strongly recommends that you enable console logging on the devices that you are using and take the following actions when replacing your switch:

- Leave AutoSupport enabled during maintenance.
- Trigger a maintenance AutoSupport before and after maintenance to disable case creation for the duration of the maintenance. See this Knowledge Base article SU92: How to suppress automatic case creation during scheduled maintenance windows for further details.
- Enable session logging for any CLI sessions. For instructions on how to enable session logging, review the "Logging Session Output" section in this Knowledge Base article How to configure PuTTY for optimal connectivity to ONTAP systems.

Replace the switch

About this task

This replacement procedure describes the following scenario:

- The cluster initially has four nodes connected to two Nexus 3232C cluster switches, CL1 and CL2.
- You plan to replace cluster switch CL2 with C2 (steps 1 to 21):
  - On each node, you migrate the cluster LIFs connected to cluster switch CL2 to cluster ports connected to cluster switch CL1.
  - You disconnect the cabling from all ports on cluster switch CL2 and reconnect the cabling to the same ports on the replacement cluster switch C2.
  - You revert the migrated cluster LIFs on each node.

About the examples

This replacement procedure replaces the second Nexus 3232C cluster switch CL2 with the new 3232C switch C2.

The examples in this procedure use the following switch and node nomenclature:

- The four nodes are n1, n2, n3, and n4.
- n1_clus1 is the first cluster logical interface (LIF) connected to cluster switch C1 for node n1.
- n1_clus2 is the first cluster LIF connected to cluster switch CL2 or C2 for node n1.
- n1_clus3 is the second LIF connected to cluster switch C2 for node n1.-
- n1_clus4 is the second LIF connected to cluster switch CL1, for node n1.

The number of 10 GbE and 40/100 GbE ports are defined in the reference configuration files (RCFs) available at Cisco® Cluster Network Switch Reference Configuration File Download.

The examples in this replacement procedure use four nodes. Two of the nodes use four 10 GB cluster interconnect ports: e0a, e0b, e0c, and e0d. The other two nodes use two 40 GB cluster interconnect ports: e4a and e4e. See the Hardware Universe to verify the correct cluster ports for your platform.

Step 1: Display and migrate the cluster ports to switch

1. If AutoSupport is enabled on this cluster, suppress automatic case creation by invoking an AutoSupport message:

   ```
   system node autosupport invoke -node * -type all - message MAINT=xh
   ```

   x is the duration of the maintenance window in hours.

   > The AutoSupport message notifies technical support of this maintenance task so that automatic case creation is suppressed during the maintenance window.

2. Display information about the devices in your configuration:

   ```
   network device-discovery show
   ```

Show example

```
cluster::> network device-discovery show
            Local  Discovered
Node        Port   Device               Interface         Platform
----------- ------ -------------------- ----------------
----------------
n1         /cdp
            e0a    CL1                  Ethernet1/1/1    N3K-C3232C
            e0b    CL2                  Ethernet1/1/1    N3K-C3232C
            e0c    CL2                  Ethernet1/1/2    N3K-C3232C
            e0d    CL1                  Ethernet1/1/2    N3K-C3232C

n2         /cdp
            e0a    CL1                  Ethernet1/1/3    N3K-C3232C
            e0b    CL2                  Ethernet1/1/3    N3K-C3232C
            e0c    CL2                  Ethernet1/1/4    N3K-C3232C
            e0d    CL1                  Ethernet1/1/4    N3K-C3232C

n3         /cdp
            e4a    CL1                  Ethernet1/7      N3K-C3232C
            e4e    CL2                  Ethernet1/7      N3K-C3232C

n4         /cdp
            e4a    CL1                  Ethernet1/8      N3K-C3232C
            e4e    CL2                  Ethernet1/8      N3K-C3232C
```

3. Determine the administrative or operational status for each cluster interface.
   a. Display the network port attributes:

      ```
      network port show -role cluster
      ```

Show example

```
cluster::*> network port show -role cluster
(network port show)
Node: n1

Ignore
                                                  Speed(Mbps)
Health  Health
Port      IPspace      Broadcast Domain Link MTU  Admin/Oper
Status  Status
--------- ------------ ---------------- ---- ---- -----------
------------
e0a       Cluster      Cluster          up   9000 auto/10000  -
e0b       Cluster      Cluster          up   9000 auto/10000  -
e0c       Cluster      Cluster          up   9000 auto/10000  -
e0d       Cluster      Cluster          up   9000 auto/10000  -
-

Node: n2

Ignore
                                                  Speed(Mbps)
Health  Health
Port      IPspace      Broadcast Domain Link MTU  Admin/Oper
Status  Status
--------- ------------ ---------------- ---- ---- -----------
------------
e0a       Cluster      Cluster          up   9000  auto/10000 -
e0b       Cluster      Cluster          up   9000  auto/10000 -
e0c       Cluster      Cluster          up   9000  auto/10000 -
e0d       Cluster      Cluster          up   9000  auto/10000 -
-

Node: n3

Ignore
                                                  Speed(Mbps)
Health   Health
Port      IPspace      Broadcast Domain Link MTU  Admin/Oper
Status   Status
--------- ------------ ---------------- ---- ---- -----------
-------- -----
e4a       Cluster      Cluster          up   9000 auto/40000  -
-
e4e       Cluster      Cluster          up   9000 auto/40000  -
```

```
-

Node: n4

Ignore
                                                          Speed(Mbps)
Health   Health
Port      IPspace      Broadcast Domain Link MTU  Admin/Oper
Status   Status
--------- ------------ ---------------- ---- ---- -----------
-------- -----
e4a       Cluster      Cluster          up   9000 auto/40000  -
e4e       Cluster      Cluster          up   9000 auto/40000  -
```

b. Display information about the logical interfaces (LIFs):

```
network interface show -role cluster
```

Show example

```
cluster::*> network interface show -role cluster
             Logical    Status     Network          Current
Current Is
Vserver     Interface  Admin/Oper Address/Mask       Node
Port   Home
----------- ---------- ---------- ------------------
------------ ------- ---
Cluster
            n1_clus1   up/up      10.10.0.1/24       n1
e0a     true
            n1_clus2   up/up      10.10.0.2/24       n1
e0b     true
            n1_clus3   up/up      10.10.0.3/24       n1
e0c     true
            n1_clus4   up/up      10.10.0.4/24       n1
e0d     true
            n2_clus1   up/up      10.10.0.5/24       n2
e0a     true
            n2_clus2   up/up      10.10.0.6/24       n2
e0b     true
            n2_clus3   up/up      10.10.0.7/24       n2
e0c     true
            n2_clus4   up/up      10.10.0.8/24       n2
e0d     true
            n3_clus1   up/up      10.10.0.9/24       n3
e0a     true
            n3_clus2   up/up      10.10.0.10/24      n3
e0e     true
            n4_clus1   up/up      10.10.0.11/24      n4
e0a     true
            n4_clus2   up/up      10.10.0.12/24      n4
e0e     true
```

c. Display the discovered cluster switches:

```
system cluster-switch show
```

Show example

The following output example displays the cluster switches:

```
cluster::> system cluster-switch show
Switch                      Type               Address
Model
--------------------------- ------------------ ----------------
---------------
CL1                         cluster-network    10.10.1.101
NX3232C
        Serial Number: FOX000001
         Is Monitored: true
               Reason: None
     Software Version: Cisco Nexus Operating System (NX-OS)
Software, Version 7.0(3)I6(1)
       Version Source: CDP

CL2                         cluster-network    10.10.1.102
NX3232C
        Serial Number: FOX000002
         Is Monitored: true
               Reason: None
     Software Version: Cisco Nexus Operating System (NX-OS)
Software, Version 7.0(3)I6(1)
       Version Source: CDP
```

4. Verify that the appropriate RCF and image are installed on the new Nexus 3232C switch and make any necessary site customizations.
   a. Go to the NetApp Support Site.

      mysupport.netapp.com

   b. Go to the **Cisco Ethernet Switches** page and note the required software versions in the table.

      Cisco Ethernet Switches

   c. Download the appropriate version of the RCF.
   d. Click **CONTINUE** on the **Description** page, accept the license agreement, and then navigate to the **Download** page.
   e. Download the correct version of the image software from the **Cisco® Cluster and Management Network Switch Reference Configuration File Download** page.

      Cisco® Cluster and Management Network Switch Reference Configuration File Download

5. Migrate the cluster LIFs to the physical node ports connected to the replacement switch C2:

`network interface migrate -vserver vserver-name -lif lif-name -source-node node-name -destination-node node-name -destination-port port-name`

Show example

You must migrate all the cluster LIFs individually as shown in the following example:

```
cluster::*> network interface migrate -vserver Cluster -lif n1_clus2
-source-node n1 -destination-
node n1 -destination-port e0a
cluster::*> network interface migrate -vserver Cluster -lif n1_clus3
-source-node n1 -destination-
node n1 -destination-port e0d
cluster::*> network interface migrate -vserver Cluster -lif n2_clus2
-source-node n2 -destination-
node n2 -destination-port e0a
cluster::*> network interface migrate -vserver Cluster -lif n2_clus3
-source-node n2 -destination-
node n2 -destination-port e0d
cluster::*> network interface migrate -vserver Cluster -lif n3_clus2
-source-node n3 -destination-
node n3 -destination-port e4a
cluster::*> network interface migrate -vserver Cluster -lif n4_clus2
-source-node n4 -destination-
node n4 -destination-port e4a
```

6. Verify the status of the cluster ports and their home designations:

   `network interface show -role cluster`

Show example

```
cluster::*> network interface show -role cluster
(network interface show)
            Logical    Status     Network            Current
Current Is
Vserver     Interface  Admin/Oper Address/Mask       Node
Port    Home
----------- ---------- ---------- ------------------ -------------
------- ----
Cluster
            n1_clus1   up/up      10.10.0.1/24       n1
e0a     true
            n1_clus2   up/up      10.10.0.2/24       n1
e0a     false
            n1_clus3   up/up      10.10.0.3/24       n1
e0d     false
            n1_clus4   up/up      10.10.0.4/24       n1
e0d     true
            n2_clus1   up/up      10.10.0.5/24       n2
e0a     true
            n2_clus2   up/up      10.10.0.6/24       n2
e0a     false
            n2_clus3   up/up      10.10.0.7/24       n2
e0d     false
            n2_clus4   up/up      10.10.0.8/24       n2
e0d     true
            n3_clus1   up/up      10.10.0.9/24       n3
e4a     true
            n3_clus2   up/up      10.10.0.10/24      n3
e4a     false
            n4_clus1   up/up      10.10.0.11/24      n4
e4a     true
            n4_clus2   up/up      10.10.0.12/24      n4
e4a     false
```

7. Shut down the cluster interconnect ports that are physically connected to the original switch CL2:

   `network port modify -node` *`node-name`* `-port` *`port-name`* `-up-admin false`

Show example

The following example shows the cluster interconnect ports are shut down on all nodes:

```
cluster::*> network port modify -node n1 -port e0b -up-admin false
cluster::*> network port modify -node n1 -port e0c -up-admin false
cluster::*> network port modify -node n2 -port e0b -up-admin false
cluster::*> network port modify -node n2 -port e0c -up-admin false
cluster::*> network port modify -node n3 -port e4e -up-admin false
cluster::*> network port modify -node n4 -port e4e -up-admin false
```

8. Verify the connectivity of the remote cluster interfaces:

ONTAP 9.9.1 and later

You can use the `network interface check cluster-connectivity` command to start an accessibility check for cluster connectivity and then display the details:

`network interface check cluster-connectivity start` and `network interface check cluster-connectivity show`

```
cluster1::*> network interface check cluster-connectivity start
```

NOTE: Wait for a number of seconds before running the `show` command to display the details.

```
cluster1::*> network interface check cluster-connectivity show
                                  Source           Destination
Packet
Node   Date                       LIF              LIF
Loss
------ -------------------------- ---------------- ----------------
-----------
n1
       3/5/2022 19:21:18 -06:00   n1_clus2         n2-clus1
none
       3/5/2022 19:21:20 -06:00   n1_clus2         n2_clus2
none
.
.
n2
       3/5/2022 19:21:18 -06:00   n2_clus2         n1_clus1
none
       3/5/2022 19:21:20 -06:00   n2_clus2         n1_clus2
none
.
.
n3
.
.
.n4
.
.
```

All ONTAP releases

For all ONTAP releases, you can also use the `cluster ping-cluster -node <name>` command to check the connectivity:

```
cluster ping-cluster -node <name>
```

```
cluster1::*> cluster ping-cluster -node local
Host is n1
Getting addresses from network interface table...
Cluster n1_clus1 n1        e0a    10.10.0.1
Cluster n1_clus2 n1        e0b    10.10.0.2
Cluster n1_clus3 n1        e0c    10.10.0.3
Cluster n1_clus4 n1        e0d    10.10.0.4
Cluster n2_clus1 n2        e0a    10.10.0.5
Cluster n2_clus2 n2        e0b    10.10.0.6
Cluster n2_clus3 n2        e0c    10.10.0.7
Cluster n2_clus4 n2        e0d    10.10.0.8
Cluster n3_clus1 n4        e0a    10.10.0.9
Cluster n3_clus2 n3        e0e    10.10.0.10
Cluster n4_clus1 n4        e0a    10.10.0.11
Cluster n4_clus2 n4        e0e    10.10.0.12
Local = 10.10.0.1 10.10.0.2 10.10.0.3 10.10.0.4
Remote = 10.10.0.5 10.10.0.6 10.10.0.7 10.10.0.8 10.10.0.9 10.10.0.10
10.10.0.11
10.10.0.12 Cluster Vserver Id = 4294967293 Ping status:
....
Basic connectivity succeeds on 32 path(s)
Basic connectivity fails on 0 path(s) ................
Detected 9000 byte MTU on 32 path(s):
    Local 10.10.0.1 to Remote 10.10.0.5
    Local 10.10.0.1 to Remote 10.10.0.6
    Local 10.10.0.1 to Remote 10.10.0.7
    Local 10.10.0.1 to Remote 10.10.0.8
    Local 10.10.0.1 to Remote 10.10.0.9
    Local 10.10.0.1 to Remote 10.10.0.10
    Local 10.10.0.1 to Remote 10.10.0.11
    Local 10.10.0.1 to Remote 10.10.0.12
    Local 10.10.0.2 to Remote 10.10.0.5
    Local 10.10.0.2 to Remote 10.10.0.6
    Local 10.10.0.2 to Remote 10.10.0.7
    Local 10.10.0.2 to Remote 10.10.0.8
    Local 10.10.0.2 to Remote 10.10.0.9
    Local 10.10.0.2 to Remote 10.10.0.10
    Local 10.10.0.2 to Remote 10.10.0.11
    Local 10.10.0.2 to Remote 10.10.0.12
    Local 10.10.0.3 to Remote 10.10.0.5
    Local 10.10.0.3 to Remote 10.10.0.6
    Local 10.10.0.3 to Remote 10.10.0.7
    Local 10.10.0.3 to Remote 10.10.0.8
    Local 10.10.0.3 to Remote 10.10.0.9
    Local 10.10.0.3 to Remote 10.10.0.10
```

```
    Local 10.10.0.3 to Remote 10.10.0.11
    Local 10.10.0.3 to Remote 10.10.0.12
    Local 10.10.0.4 to Remote 10.10.0.5
    Local 10.10.0.4 to Remote 10.10.0.6
    Local 10.10.0.4 to Remote 10.10.0.7
    Local 10.10.0.4 to Remote 10.10.0.8
    Local 10.10.0.4 to Remote 10.10.0.9
    Local 10.10.0.4 to Remote 10.10.0.10
    Local 10.10.0.4 to Remote 10.10.0.11
    Local 10.10.0.4 to Remote 10.10.0.12
Larger than PMTU communication succeeds on 32 path(s) RPC status:
8 paths up, 0 paths down (tcp check)
8 paths up, 0 paths down (udp check)
```

Step 2: Migrate ISLs to switch CL1 and C2

1. Shut down the ports 1/31 and 1/32 on cluster switch CL1.

   For more information on Cisco commands, see the guides listed in the Cisco Nexus 3000 Series NX-OS Command References.

   Show example

   ```
   (CL1)# configure
   (CL1)(Config)# interface e1/31-32
   (CL1)(config-if-range)# shutdown
   (CL1)(config-if-range)# exit
   (CL1)(Config)# exit
   (CL1)#
   ```

2. Remove all the cables attached to the cluster switch CL2 and reconnect them to the replacement switch C2 for all the nodes.
3. Remove the inter-switch link (ISL) cables from ports e1/31 and e1/32 on cluster switch CL2 and reconnect them to the same ports on the replacement switch C2.
4. Bring up ISL ports 1/31 and 1/32 on the cluster switch CL1.

   For more information on Cisco commands, see the guides listed in the Cisco Nexus 3000 Series NX-OS Command References.

Show example

```
(CL1)# configure
(CL1)(Config)# interface e1/31-32
(CL1)(config-if-range)# no shutdown
(CL1)(config-if-range)# exit
(CL1)(Config)# exit
(CL1)#
```

5. Verify that the ISLs are up on CL1.

   For more information on Cisco commands, see the guides listed in the Cisco Nexus 3000 Series NX-OS Command References.

   Ports Eth1/31 and Eth1/32 should indicate `(P)`, which means that the ISL ports are up in the port-channel:

   Show example

```
CL1# show port-channel summary
Flags: D - Down         P - Up in port-channel (members)
       I - Individual   H - Hot-standby (LACP only)
       s - Suspended    r - Module-removed
       S - Switched     R - Routed
       U - Up (port-channel)
       M - Not in use. Min-links not met
------------------------------------------------------------------------
------------
Group Port-        Type   Protocol  Member Ports
      Channel
------------------------------------------------------------------------
------------
1     Po1(SU)      Eth    LACP      Eth1/31(P)   Eth1/32(P)
```

6. Verify that the ISLs are up on cluster switch C2.

   For more information on Cisco commands, see the guides listed in the Cisco Nexus 3000 Series NX-OS Command References.

Show example

Ports Eth1/31 and Eth1/32 should indicate (P), which means that both ISL ports are up in the port-channel.

```
C2# show port-channel summary
Flags: D - Down         P - Up in port-channel (members)
       I - Individual   H - Hot-standby (LACP only)        s -
Suspended    r - Module-removed
       S - Switched     R - Routed
       U - Up (port-channel)
       M - Not in use. Min-links not met
------------------------------------------------------------------------
------------
Group Port-        Type   Protocol  Member Ports
      Channel
------------------------------------------------------------------------
------------
1     Po1(SU)      Eth    LACP      Eth1/31(P)   Eth1/32(P)
```

7. On all nodes, bring up all the cluster interconnect ports connected to the replacement switch C2:

   `network port modify -node node-name -port port-name -up-admin true`

   Show example

```
cluster::*> network port modify -node n1 -port e0b -up-admin true
cluster::*> network port modify -node n1 -port e0c -up-admin true
cluster::*> network port modify -node n2 -port e0b -up-admin true
cluster::*> network port modify -node n2 -port e0c -up-admin true
cluster::*> network port modify -node n3 -port e4e -up-admin true
cluster::*> network port modify -node n4 -port e4e -up-admin true
```

Step 3: Revert all LIFs to originally assigned ports

1. Revert all the migrated cluster interconnect LIFs on all the nodes:

   `network interface revert -vserver cluster -lif lif-name`

Show example

You must revert all the cluster interconnect LIFs individually as shown in the following example:

```
cluster::*> network interface revert -vserver cluster -lif n1_clus2
cluster::*> network interface revert -vserver cluster -lif n1_clus3
cluster::*> network interface revert -vserver cluster -lif n2_clus2
cluster::*> network interface revert -vserver cluster -lif n2_clus3
Cluster::*> network interface revert -vserver cluster -lif n3_clus2
Cluster::*> network interface revert -vserver cluster -lif n4_clus2
```

2. Verify that the cluster interconnect ports are now reverted to their home:

   ```
   network interface show
   ```

Show example

The following example shows that all the LIFs have been successfully reverted because the ports listed under the `Current Port` column have a status of `true` in the `Is Home` column. If a port has a value of `false`, the LIF has not been reverted.

```
cluster::*> network interface show -role cluster
 (network interface show)
            Logical    Status     Network            Current
Current Is
Vserver     Interface  Admin/Oper Address/Mask       Node
Port    Home
----------- ---------- ---------- ------------------ -------------
------- ----
Cluster
             n1_clus1   up/up      10.10.0.1/24       n1
e0a     true
             n1_clus2   up/up      10.10.0.2/24       n1
e0b     true
             n1_clus3   up/up      10.10.0.3/24       n1
e0c     true
             n1_clus4   up/up      10.10.0.4/24       n1
e0d     true
             n2_clus1   up/up      10.10.0.5/24       n2
e0a     true
             n2_clus2   up/up      10.10.0.6/24       n2
e0b     true
             n2_clus3   up/up      10.10.0.7/24       n2
e0c     true
             n2_clus4   up/up      10.10.0.8/24       n2
e0d     true
             n3_clus1   up/up      10.10.0.9/24       n3
e4a     true
             n3_clus2   up/up      10.10.0.10/24      n3
e4e     true
             n4_clus1   up/up      10.10.0.11/24      n4
e4a     true
             n4_clus2   up/up      10.10.0.12/24      n4
e4e     true
```

3. Verify that the cluster ports are connected:

   `network port show -role cluster`

Show example

```
cluster::*> network port show -role cluster
  (network port show)
Node: n1

Ignore
                                                  Speed(Mbps) Health
Health
Port      IPspace      Broadcast Domain Link MTU  Admin/Oper  Status
Status
--------- ------------ ---------------- ---- ---- -----------
-------- -----
e0a       Cluster      Cluster          up   9000 auto/10000  -
e0b       Cluster      Cluster          up   9000 auto/10000  -
e0c       Cluster      Cluster          up   9000 auto/10000  -
e0d       Cluster      Cluster          up   9000 auto/10000  -
-

Node: n2

Ignore
                                                  Speed(Mbps) Health
Health
Port      IPspace      Broadcast Domain Link MTU  Admin/Oper  Status
Status
 --------- ------------ ---------------- ---- ---- -----------
-------- -----
e0a       Cluster      Cluster          up   9000  auto/10000 -
e0b       Cluster      Cluster          up   9000  auto/10000 -
e0c       Cluster      Cluster          up   9000  auto/10000 -
e0d       Cluster      Cluster          up   9000  auto/10000 -
-
Node: n3

Ignore
                                                  Speed(Mbps) Health
Health
Port      IPspace      Broadcast Domain Link MTU  Admin/Oper  Status
Status
--------- ------------ ---------------- ---- ---- -----------
-------- -----
e4a       Cluster      Cluster          up   9000 auto/40000  -
e4e       Cluster      Cluster          up   9000 auto/40000  -
-
Node: n4
```

```
Ignore
                                                          Speed(Mbps) Health
Health
Port      IPspace      Broadcast Domain Link MTU  Admin/Oper  Status
Status
--------- ------------ ---------------- ---- ---- -----------
-------- -----
e4a       Cluster      Cluster          up   9000 auto/40000  -
e4e       Cluster      Cluster          up   9000 auto/40000  -
-
```

4. Verify the connectivity of the remote cluster interfaces:

ONTAP 9.9.1 and later

You can use the `network interface check cluster-connectivity` command to start an accessibility check for cluster connectivity and then display the details:

`network interface check cluster-connectivity start` and `network interface check cluster-connectivity show`

```
cluster1::*> network interface check cluster-connectivity start
```

NOTE: Wait for a number of seconds before running the `show` command to display the details.

```
cluster1::*> network interface check cluster-connectivity show
                                  Source           Destination
Packet
Node   Date                       LIF              LIF
Loss
------ -------------------------- ---------------- ----------------
-----------
n1
       3/5/2022 19:21:18 -06:00   n1_clus2         n2-clus1
none
       3/5/2022 19:21:20 -06:00   n1_clus2         n2_clus2
none
.
.
n2
       3/5/2022 19:21:18 -06:00   n2_clus2         n1_clus1
none
       3/5/2022 19:21:20 -06:00   n2_clus2         n1_clus2
none
.
.
n3
.
.
.n4
.
.
```

All ONTAP releases

For all ONTAP releases, you can also use the `cluster ping-cluster -node <name>` command to check the connectivity:

`cluster ping-cluster -node <name>`

```
cluster1::*> cluster ping-cluster -node local
Host is n1
Getting addresses from network interface table...
Cluster n1_clus1 n1        e0a    10.10.0.1
Cluster n1_clus2 n1        e0b    10.10.0.2
Cluster n1_clus3 n1        e0c    10.10.0.3
Cluster n1_clus4 n1        e0d    10.10.0.4
Cluster n2_clus1 n2        e0a    10.10.0.5
Cluster n2_clus2 n2        e0b    10.10.0.6
Cluster n2_clus3 n2        e0c    10.10.0.7
Cluster n2_clus4 n2        e0d    10.10.0.8
Cluster n3_clus1 n4        e0a    10.10.0.9
Cluster n3_clus2 n3        e0e    10.10.0.10
Cluster n4_clus1 n4        e0a    10.10.0.11
Cluster n4_clus2 n4        e0e    10.10.0.12
Local = 10.10.0.1 10.10.0.2 10.10.0.3 10.10.0.4
Remote = 10.10.0.5 10.10.0.6 10.10.0.7 10.10.0.8 10.10.0.9 10.10.0.10
10.10.0.11
10.10.0.12 Cluster Vserver Id = 4294967293 Ping status:
....
Basic connectivity succeeds on 32 path(s)
Basic connectivity fails on 0 path(s) ................
Detected 9000 byte MTU on 32 path(s):
    Local 10.10.0.1 to Remote 10.10.0.5
    Local 10.10.0.1 to Remote 10.10.0.6
    Local 10.10.0.1 to Remote 10.10.0.7
    Local 10.10.0.1 to Remote 10.10.0.8
    Local 10.10.0.1 to Remote 10.10.0.9
    Local 10.10.0.1 to Remote 10.10.0.10
    Local 10.10.0.1 to Remote 10.10.0.11
    Local 10.10.0.1 to Remote 10.10.0.12
    Local 10.10.0.2 to Remote 10.10.0.5
    Local 10.10.0.2 to Remote 10.10.0.6
    Local 10.10.0.2 to Remote 10.10.0.7
    Local 10.10.0.2 to Remote 10.10.0.8
    Local 10.10.0.2 to Remote 10.10.0.9
    Local 10.10.0.2 to Remote 10.10.0.10
    Local 10.10.0.2 to Remote 10.10.0.11
    Local 10.10.0.2 to Remote 10.10.0.12
    Local 10.10.0.3 to Remote 10.10.0.5
    Local 10.10.0.3 to Remote 10.10.0.6
    Local 10.10.0.3 to Remote 10.10.0.7
    Local 10.10.0.3 to Remote 10.10.0.8
    Local 10.10.0.3 to Remote 10.10.0.9
    Local 10.10.0.3 to Remote 10.10.0.10
```

```
    Local 10.10.0.3 to Remote 10.10.0.11
    Local 10.10.0.3 to Remote 10.10.0.12
    Local 10.10.0.4 to Remote 10.10.0.5
    Local 10.10.0.4 to Remote 10.10.0.6
    Local 10.10.0.4 to Remote 10.10.0.7
    Local 10.10.0.4 to Remote 10.10.0.8
    Local 10.10.0.4 to Remote 10.10.0.9
    Local 10.10.0.4 to Remote 10.10.0.10
    Local 10.10.0.4 to Remote 10.10.0.11
    Local 10.10.0.4 to Remote 10.10.0.12
Larger than PMTU communication succeeds on 32 path(s) RPC status:
8 paths up, 0 paths down (tcp check)
8 paths up, 0 paths down (udp check)
```

Step 4: Verify all ports and LIF are correctly migrated

1. Display the information about the devices in your configuration by entering the following commands:

   You can execute the following commands in any order:

   - `network device-discovery show`
   - `network port show -role cluster`
   - `network interface show -role cluster`
   - `system cluster-switch show`

Show example

```
cluster::> network device-discovery show
            Local  Discovered
Node        Port   Device               Interface        Platform
----------- ------ ------------------ ----------------
----------------
n1         /cdp
            e0a    C1                 Ethernet1/1/1    N3K-C3232C
            e0b    C2                 Ethernet1/1/1    N3K-C3232C
            e0c    C2                 Ethernet1/1/2    N3K-C3232C
            e0d    C1                 Ethernet1/1/2    N3K-C3232C
n2         /cdp
            e0a    C1                 Ethernet1/1/3    N3K-C3232C
            e0b    C2                 Ethernet1/1/3    N3K-C3232C
            e0c    C2                 Ethernet1/1/4    N3K-C3232C
            e0d    C1                 Ethernet1/1/4    N3K-C3232C
n3         /cdp
            e4a    C1                 Ethernet1/7      N3K-C3232C
            e4e    C2                 Ethernet1/7      N3K-C3232C

n4         /cdp
            e4a    C1                 Ethernet1/8      N3K-C3232C
            e4e    C2                 Ethernet1/8      N3K-C3232C

cluster::*> network port show -role cluster
  (network port show)
Node: n1

Ignore
                                                      Speed(Mbps) Health
Health
Port      IPspace      Broadcast Domain Link MTU  Admin/Oper  Status
Status
--------- ------------ ---------------- ---- ---- -----------
--------- -----
e0a       Cluster      Cluster          up   9000 auto/10000  -
e0b       Cluster      Cluster          up   9000 auto/10000  -
e0c       Cluster      Cluster          up   9000 auto/10000  -
e0d       Cluster      Cluster          up   9000 auto/10000  -

Node: n2

Ignore
                                                      Speed(Mbps) Health
Health
```

```
Port      IPspace      Broadcast Domain Link MTU  Admin/Oper  Status
Status
--------- ------------ ---------------- ---- ---- -----------
-------- -----
e0a       Cluster      Cluster          up   9000  auto/10000 -
e0b       Cluster      Cluster          up   9000  auto/10000 -
e0c       Cluster      Cluster          up   9000  auto/10000 -
e0d       Cluster      Cluster          up   9000  auto/10000 -

Node: n3

Ignore
                                                  Speed(Mbps) Health
Health
Port      IPspace      Broadcast Domain Link MTU  Admin/Oper  Status
Status
--------- ------------ ---------------- ---- ---- -----------
-------- -----
e4a       Cluster      Cluster          up   9000 auto/40000  -
e4e       Cluster      Cluster          up   9000 auto/40000  -

Node: n4

Ignore
                                                  Speed(Mbps) Health
Health
Port      IPspace      Broadcast Domain Link MTU  Admin/Oper  Status
Status
--------- ------------ ---------------- ---- ---- -----------
-------- -----
e4a       Cluster      Cluster          up   9000 auto/40000  -
e4e       Cluster      Cluster          up   9000 auto/40000  -

cluster::*> network interface show -role cluster

            Logical    Status     Network            Current
Current Is
Vserver     Interface  Admin/Oper Address/Mask       Node
Port    Home
----------- ---------- ---------- ------------------ -------------
------- ----
Cluster
            nm1_clus1  up/up      10.10.0.1/24       n1
e0a     true
            n1_clus2   up/up      10.10.0.2/24       n1
e0b     true
```

```
            n1_clus3   up/up      10.10.0.3/24       n1
e0c     true
            n1_clus4   up/up      10.10.0.4/24       n1
e0d     true
            n2_clus1   up/up      10.10.0.5/24       n2
e0a     true
            n2_clus2   up/up      10.10.0.6/24       n2
e0b     true
            n2_clus3   up/up      10.10.0.7/24       n2
e0c     true
            n2_clus4   up/up      10.10.0.8/24       n2
e0d     true
            n3_clus1   up/up      10.10.0.9/24       n3
e4a     true
            n3_clus2   up/up      10.10.0.10/24      n3
e4e     true
            n4_clus1   up/up      10.10.0.11/24      n4
e4a     true
            n4_clus2   up/up      10.10.0.12/24      n4
e4e     true

cluster::*> system cluster-switch show
Switch                       Type               Address
Model
---------------------------- ------------------ ----------------
---------------
CL1                           cluster-network   10.10.1.101
NX3232C
             Serial Number: FOX000001
              Is Monitored: true
                    Reason: None
          Software Version: Cisco Nexus Operating System (NX-OS)
Software, Version 7.0(3)I6(1)
            Version Source: CDP
CL2                           cluster-network   10.10.1.102
NX3232C
             Serial Number: FOX000002
              Is Monitored: true
                    Reason: None
          Software Version: Cisco Nexus Operating System (NX-OS)
Software, Version 7.0(3)I6(1)
            Version Source: CDP

C2                            cluster-network    10.10.1.103
NX3232C
             Serial Number: FOX000003
```

```
              Is Monitored: true
                    Reason: None
          Software Version: Cisco Nexus Operating System (NX-OS)
Software, Version 7.0(3)I6(1)
            Version Source: CDP 3 entries were displayed.
```

2. Delete the replaced cluster switch CL2 if it has not been removed automatically:

   `system cluster-switch delete -device cluster-switch-name`

3. Verify that the proper cluster switches are monitored:

   `system cluster-switch show`

   Show example

   The following example shows the cluster switches are monitored because the `Is Monitored` state is `true`.

```
cluster::> system cluster-switch show
Switch                      Type               Address
Model
--------------------------- ------------------ ----------------
---------------
CL1                         cluster-network    10.10.1.101
NX3232C
            Serial Number: FOX000001
             Is Monitored: true
                   Reason: None
         Software Version: Cisco Nexus Operating System (NX-OS)
Software, Version 7.0(3)I6(1)
           Version Source: CDP

C2                          cluster-network    10.10.1.103
NX3232C
            Serial Number: FOX000002
             Is Monitored: true
                   Reason: None
         Software Version: Cisco Nexus Operating System (NX-OS)
Software, Version 7.0(3)I6(1)
           Version Source: CDP
```

4. If you suppressed automatic case creation, re-enable it by invoking an AutoSupport message:

   `system node autosupport invoke -node * -type all -message MAINT=END`

What's next?

After you've replaced your switch, you can configure switch health monitoring.

Replace Cisco Nexus 3232C cluster switches with switchless connections

You can migrate from a cluster with a switched cluster network to one where two nodes are directly connected for ONTAP 9.3 and later.

Review requirements

Guidelines

Review the following guidelines:

- Migrating to a two-node switchless cluster configuration is a nondisruptive operation. Most systems have two dedicated cluster interconnect ports on each node, but you can also use this procedure for systems with a larger number of dedicated cluster interconnect ports on each node, such as four, six or eight.
- You cannot use the switchless cluster interconnect feature with more than two nodes.
- If you have an existing two-node cluster that uses cluster interconnect switches and is running ONTAP 9.3 or later, you can replace the switches with direct, back-to-back connections between the nodes.

Before you begin

Make sure you have the following:

- A healthy cluster that consists of two nodes connected by cluster switches. The nodes must be running the same ONTAP release.
- Each node with the required number of dedicated cluster ports, which provide redundant cluster interconnect connections to support your system configuration. For example, there are two redundant ports for a system with two dedicated cluster interconnect ports on each node.

Migrate the switches

About this task

The following procedure removes the cluster switches in a two-node cluster and replaces each connection to the switch with a direct connection to the partner node.

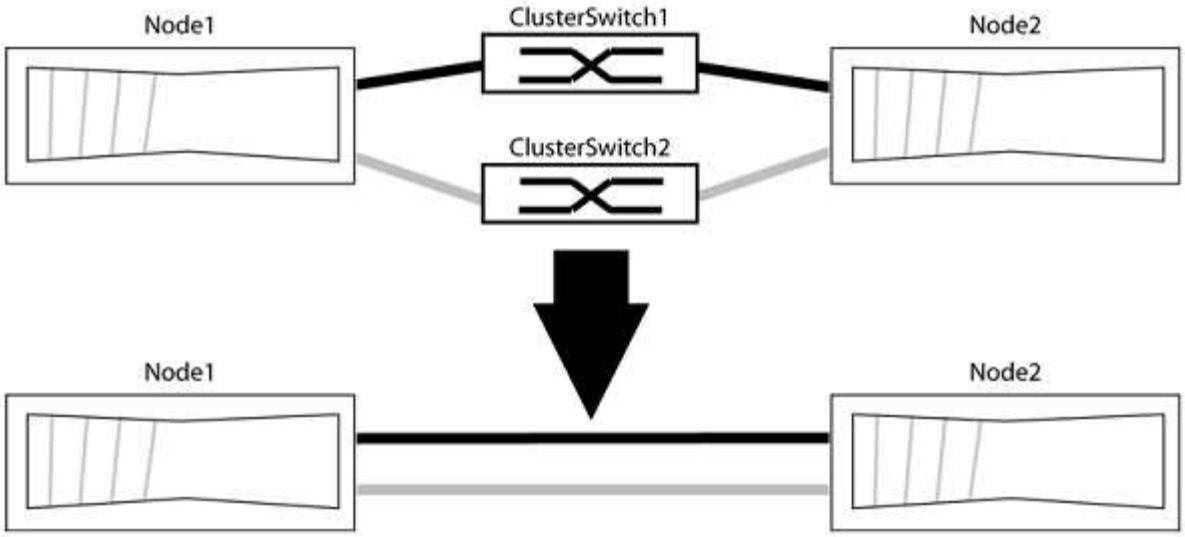

About the examples

The examples in the following procedure show nodes that are using "e0a" and "e0b" as cluster ports. Your nodes might be using different cluster ports as they vary by system.

Step 1: Prepare for migration

1. Change the privilege level to advanced, entering `y` when prompted to continue:

   ```
   set -privilege advanced
   ```

   The advanced prompt `*>` appears.

2. ONTAP 9.3 and later supports automatic detection of switchless clusters, which is enabled by default.

   You can verify that detection of switchless clusters is enabled by running the advanced privilege command:

   ```
   network options detect-switchless-cluster show
   ```

   Show example

   The following example output shows if the option is enabled.

   ```
   cluster::*> network options detect-switchless-cluster show
      (network options detect-switchless-cluster show)
   Enable Switchless Cluster Detection: true
   ```

   If "Enable Switchless Cluster Detection" is `false`, contact NetApp support.

3. If AutoSupport is enabled on this cluster, suppress automatic case creation by invoking an AutoSupport message:

   ```
   system node autosupport invoke -node * -type all -message
   MAINT=<number_of_hours>h
   ```

where `h` is the duration of the maintenance window in hours. The message notifies technical support of this maintenance task so that they can suppress automatic case creation during the maintenance window.

In the following example, the command suppresses automatic case creation for two hours:

Show example

```
cluster::*> system node autosupport invoke -node * -type all
-message MAINT=2h
```

Step 2: Configure ports and cabling

1. Organize the cluster ports on each switch into groups so that the cluster ports in group1 go to cluster switch1 and the cluster ports in group2 go to cluster switch2. These groups are required later in the procedure.
2. Identify the cluster ports and verify link status and health:

   `network port show -ipspace Cluster`

   In the following example for nodes with cluster ports "e0a" and "e0b", one group is identified as “node1:e0a” and “node2:e0a” and the other group as “node1:e0b” and “node2:e0b”. Your nodes might be using different cluster ports because they vary by system.

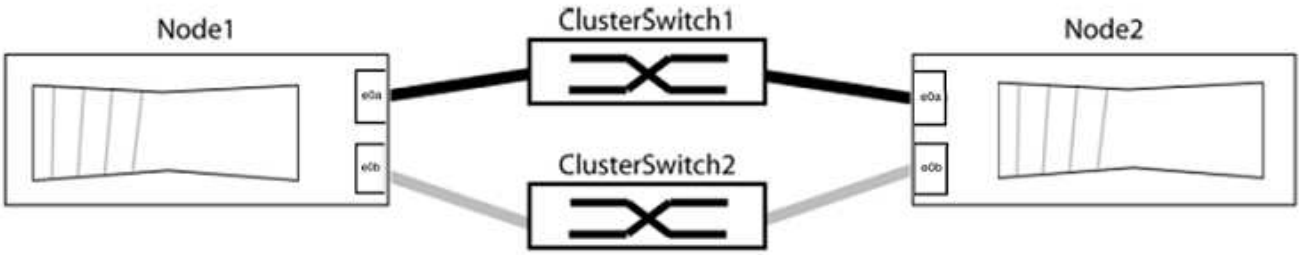

   Verify that the ports have a value of `up` for the “Link” column and a value of `healthy` for the “Health Status” column.

Show example

```
cluster::> network port show -ipspace Cluster
Node: node1

Ignore
                                             Speed(Mbps) Health
Health
Port  IPspace   Broadcast Domain Link  MTU   Admin/Oper  Status
Status
----- --------- ---------------- ----- ----- ----------- -------
-------
e0a   Cluster   Cluster          up    9000  auto/10000  healthy
false
e0b   Cluster   Cluster          up    9000  auto/10000  healthy
false

Node: node2

Ignore
                                             Speed(Mbps) Health
Health
Port  IPspace   Broadcast Domain Link  MTU   Admin/Oper  Status
Status
----- --------- ---------------- ----- ----- ----------- -------
-------
e0a   Cluster   Cluster          up    9000  auto/10000  healthy
false
e0b   Cluster   Cluster          up    9000  auto/10000  healthy
false
4 entries were displayed.
```

3. Confirm that all the cluster LIFs are on their home ports.

   Verify that the “is-home” column is `true` for each of the cluster LIFs:

   `network interface show -vserver Cluster -fields is-home`

Show example

```
cluster::*> net int show -vserver Cluster -fields is-home
(network interface show)
vserver  lif          is-home
-------- ------------ --------
Cluster  node1_clus1  true
Cluster  node1_clus2  true
Cluster  node2_clus1  true
Cluster  node2_clus2  true
4 entries were displayed.
```

If there are cluster LIFs that are not on their home ports, revert those LIFs to their home ports:

```
network interface revert -vserver Cluster -lif *
```

4. Disable auto-revert for the cluster LIFs:

```
network interface modify -vserver Cluster -lif * -auto-revert false
```

5. Verify that all ports listed in the previous step are connected to a network switch:

```
network device-discovery show -port cluster_port
```

The “Discovered Device” column should be the name of the cluster switch that the port is connected to.

Show example

The following example shows that cluster ports "e0a" and "e0b" are correctly connected to cluster switches "cs1" and "cs2".

```
cluster::> network device-discovery show -port e0a|e0b
  (network device-discovery show)
Node/     Local  Discovered
Protocol  Port   Device (LLDP: ChassisID)  Interface  Platform
--------- ------ ------------------------- ---------- ----------
node1/cdp
          e0a    cs1                       0/11       BES-53248
          e0b    cs2                       0/12       BES-53248
node2/cdp
          e0a    cs1                       0/9        BES-53248
          e0b    cs2                       0/9        BES-53248
4 entries were displayed.
```

6. Verify the connectivity of the remote cluster interfaces:

ONTAP 9.9.1 and later

You can use the `network interface check cluster-connectivity` command to start an accessibility check for cluster connectivity and then display the details:

`network interface check cluster-connectivity start` and `network interface check cluster-connectivity show`

```
cluster1::*> network interface check cluster-connectivity start
```

NOTE: Wait for a number of seconds before running the `show` command to display the details.

```
cluster1::*> network interface check cluster-connectivity show
                                  Source           Destination
Packet
Node   Date                       LIF              LIF
Loss
------ -------------------------- ---------------- ----------------
-----------
node1
       3/5/2022 19:21:18 -06:00   node1_clus2      node2-clus1
none
       3/5/2022 19:21:20 -06:00   node1_clus2      node2_clus2
none
node2
       3/5/2022 19:21:18 -06:00   node2_clus2      node1_clus1
none
       3/5/2022 19:21:20 -06:00   node2_clus2      node1_clus2
none
```

All ONTAP releases

For all ONTAP releases, you can also use the `cluster ping-cluster -node <name>` command to check the connectivity:

```
cluster ping-cluster -node <name>
```

```
cluster1::*> cluster ping-cluster -node local
Host is node2
Getting addresses from network interface table...
Cluster node1_clus1 169.254.209.69 node1 e0a
Cluster node1_clus2 169.254.49.125 node1 e0b
Cluster node2_clus1 169.254.47.194 node2 e0a
Cluster node2_clus2 169.254.19.183 node2 e0b
Local = 169.254.47.194 169.254.19.183
Remote = 169.254.209.69 169.254.49.125
Cluster Vserver Id = 4294967293
Ping status:

Basic connectivity succeeds on 4 path(s)
Basic connectivity fails on 0 path(s)

Detected 9000 byte MTU on 4 path(s):
Local 169.254.47.194 to Remote 169.254.209.69
Local 169.254.47.194 to Remote 169.254.49.125
Local 169.254.19.183 to Remote 169.254.209.69
Local 169.254.19.183 to Remote 169.254.49.125
Larger than PMTU communication succeeds on 4 path(s)
RPC status:
2 paths up, 0 paths down (tcp check)
2 paths up, 0 paths down (udp check)
```

7. Verify that the cluster is healthy:

   ```
   cluster ring show
   ```

   All units must be either master or secondary.

8. Set up the switchless configuration for the ports in group 1.

   To avoid potential networking issues, you must disconnect the ports from group1 and reconnect them back-to-back as quickly as possible, for example, **in less than 20 seconds**.

   a. Disconnect all the cables from the ports in group1 at the same time.

      In the following example, the cables are disconnected from port "e0a" on each node, and cluster traffic continues through the switch and port "e0b" on each node:

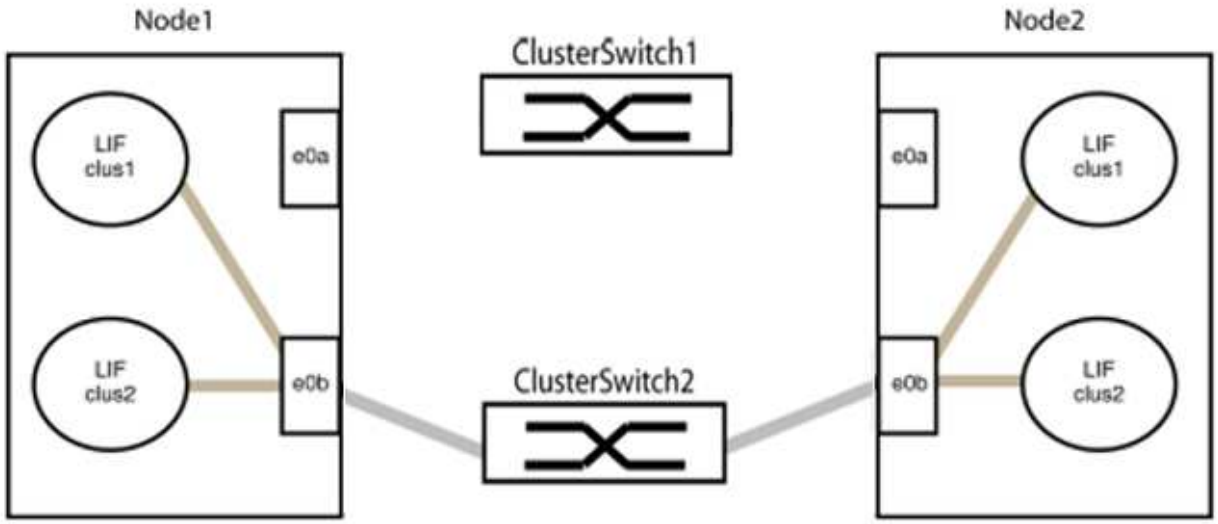

b. Cable the ports in group1 back-to-back.

In the following example, "e0a" on node1 is connected to "e0a" on node2:

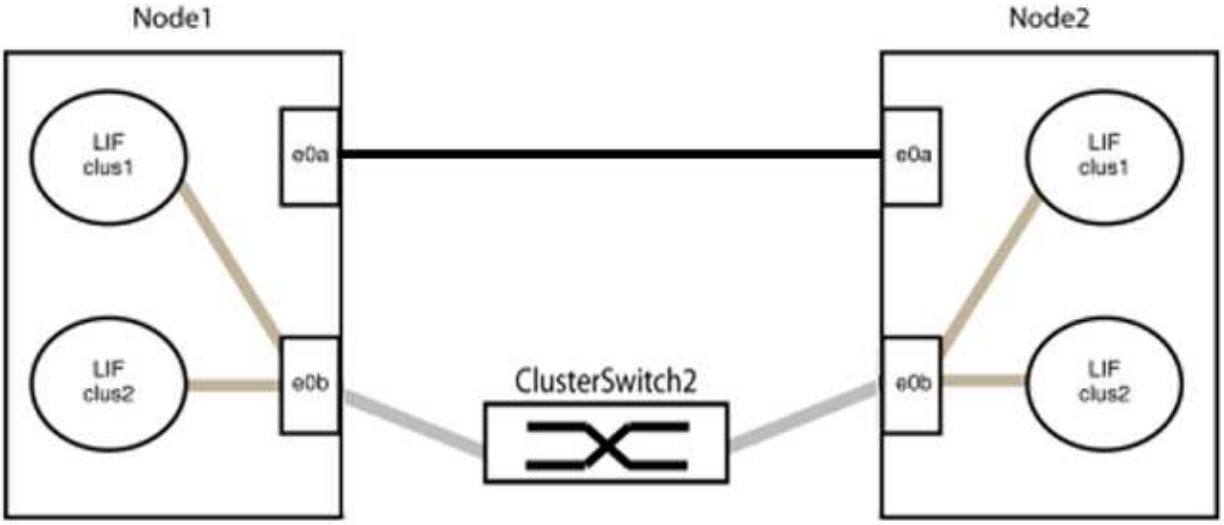

9. The switchless cluster network option transitions from `false` to `true`. This might take up to 45 seconds. Confirm that the switchless option is set to `true`:

`network options switchless-cluster show`

The following example shows that the switchless cluster is enabled:

```
cluster::*> network options switchless-cluster show
Enable Switchless Cluster: true
```

10. Verify the connectivity of the remote cluster interfaces:

ONTAP 9.9.1 and later

You can use the `network interface check cluster-connectivity` command to start an accessibility check for cluster connectivity and then display the details:

`network interface check cluster-connectivity start` and `network interface check cluster-connectivity show`

```
cluster1::*> network interface check cluster-connectivity start
```

NOTE: Wait for a number of seconds before running the `show` command to display the details.

```
cluster1::*> network interface check cluster-connectivity show
                                  Source           Destination
Packet
Node   Date                       LIF              LIF
Loss
------ -------------------------- ---------------- ----------------
-----------
node1
       3/5/2022 19:21:18 -06:00   node1_clus2      node2-clus1
none
       3/5/2022 19:21:20 -06:00   node1_clus2      node2_clus2
none
node2
       3/5/2022 19:21:18 -06:00   node2_clus2      node1_clus1
none
       3/5/2022 19:21:20 -06:00   node2_clus2      node1_clus2
none
```

All ONTAP releases

For all ONTAP releases, you can also use the `cluster ping-cluster -node <name>` command to check the connectivity:

```
cluster ping-cluster -node <name>
```

```
cluster1::*> cluster ping-cluster -node local
Host is node2
Getting addresses from network interface table...
Cluster node1_clus1 169.254.209.69 node1 e0a
Cluster node1_clus2 169.254.49.125 node1 e0b
Cluster node2_clus1 169.254.47.194 node2 e0a
Cluster node2_clus2 169.254.19.183 node2 e0b
Local = 169.254.47.194 169.254.19.183
Remote = 169.254.209.69 169.254.49.125
Cluster Vserver Id = 4294967293
Ping status:

Basic connectivity succeeds on 4 path(s)
Basic connectivity fails on 0 path(s)

Detected 9000 byte MTU on 4 path(s):
Local 169.254.47.194 to Remote 169.254.209.69
Local 169.254.47.194 to Remote 169.254.49.125
Local 169.254.19.183 to Remote 169.254.209.69
Local 169.254.19.183 to Remote 169.254.49.125
Larger than PMTU communication succeeds on 4 path(s)
RPC status:
2 paths up, 0 paths down (tcp check)
2 paths up, 0 paths down (udp check)
```

Before proceeding to the next step, you must wait at least two minutes to confirm a working back-to-back connection on group 1.

11. Set up the switchless configuration for the ports in group 2.

To avoid potential networking issues, you must disconnect the ports from group2 and reconnect them back-to-back as quickly as possible, for example, **in less than 20 seconds**.

a. Disconnect all the cables from the ports in group2 at the same time.

In the following example, the cables are disconnected from port "e0b" on each node, and cluster traffic continues through the direct connection between the "e0a" ports:

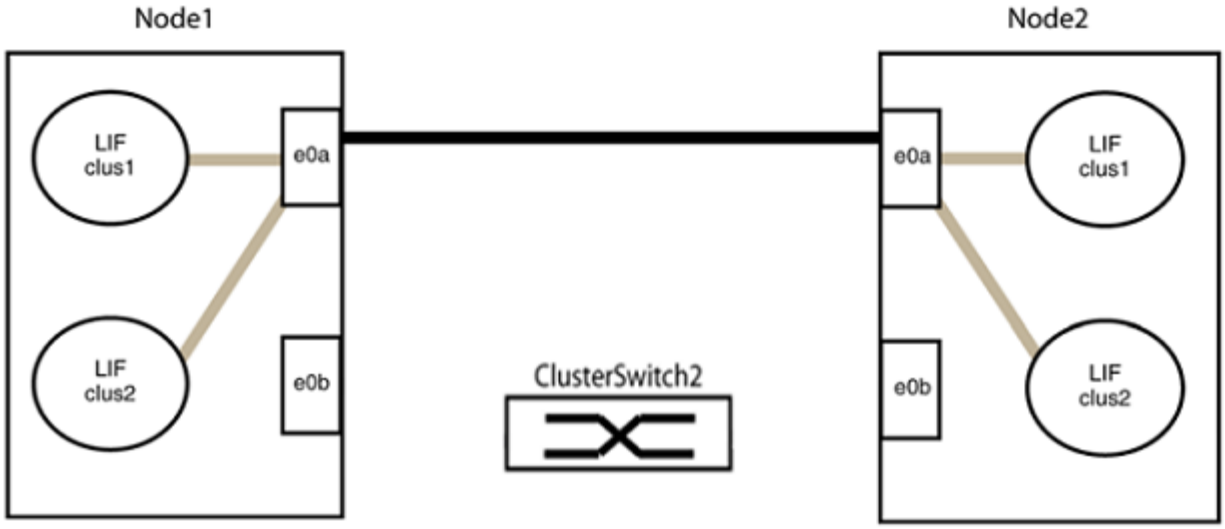

b. Cable the ports in group2 back-to-back.

   In the following example, "e0a" on node1 is connected to "e0a" on node2 and "e0b" on node1 is connected to "e0b" on node2:

Step 3: Verify the configuration

1. Verify that the ports on both nodes are correctly connected:

   `network device-discovery show -port cluster_port`

Show example

The following example shows that cluster ports "e0a" and "e0b" are correctly connected to the corresponding port on the cluster partner:

```
cluster::> net device-discovery show -port e0a|e0b
  (network device-discovery show)
Node/      Local  Discovered
Protocol   Port   Device (LLDP: ChassisID)  Interface  Platform
---------- ------ ------------------------- ---------- ----------
node1/cdp
           e0a    node2                     e0a        AFF-A300
           e0b    node2                     e0b        AFF-A300
node1/lldp
           e0a    node2 (00:a0:98:da:16:44) e0a        -
           e0b    node2 (00:a0:98:da:16:44) e0b        -
node2/cdp
           e0a    node1                     e0a        AFF-A300
           e0b    node1                     e0b        AFF-A300
node2/lldp
           e0a    node1 (00:a0:98:da:87:49) e0a        -
           e0b    node1 (00:a0:98:da:87:49) e0b        -
8 entries were displayed.
```

2. Re-enable auto-revert for the cluster LIFs:

   `network interface modify -vserver Cluster -lif * -auto-revert true`

3. Verify that all LIFs are home. This might take a few seconds.

   `network interface show -vserver Cluster -lif` *`lif_name`*

Show example

The LIFs have been reverted if the “Is Home” column is `true`, as shown for `node1_clus2` and `node2_clus2` in the following example:

```
cluster::> network interface show -vserver Cluster -fields curr-
port,is-home
vserver  lif           curr-port is-home
-------- ------------- --------- -------
Cluster  node1_clus1   e0a       true
Cluster  node1_clus2   e0b       true
Cluster  node2_clus1   e0a       true
Cluster  node2_clus2   e0b       true
4 entries were displayed.
```

If any cluster LIFS have not returned to their home ports, revert them manually from the local node:

`network interface revert -vserver Cluster -lif` *`lif_name`*

4. Check the cluster status of the nodes from the system console of either node:

   `cluster show`

   Show example

   The following example shows epsilon on both nodes to be `false`:

   ```
   Node  Health  Eligibility Epsilon
   ----- ------- ----------- --------
   node1 true    true        false
   node2 true    true        false
   2 entries were displayed.
   ```

5. Verify the connectivity of the remote cluster interfaces:

ONTAP 9.9.1 and later

You can use the `network interface check cluster-connectivity` command to start an accessibility check for cluster connectivity and then display the details:

`network interface check cluster-connectivity start` and `network interface check cluster-connectivity show`

```
cluster1::*> network interface check cluster-connectivity start
```

NOTE: Wait for a number of seconds before running the `show` command to display the details.

```
cluster1::*> network interface check cluster-connectivity show
                                  Source           Destination
Packet
Node   Date                       LIF              LIF
Loss
------ -------------------------- ---------------- ----------------
-----------
node1
       3/5/2022 19:21:18 -06:00   node1_clus2      node2-clus1
none
       3/5/2022 19:21:20 -06:00   node1_clus2      node2_clus2
none
node2
       3/5/2022 19:21:18 -06:00   node2_clus2      node1_clus1
none
       3/5/2022 19:21:20 -06:00   node2_clus2      node1_clus2
none
```

All ONTAP releases

For all ONTAP releases, you can also use the `cluster ping-cluster -node <name>` command to check the connectivity:

```
cluster ping-cluster -node <name>
```

```
cluster1::*> cluster ping-cluster -node local
Host is node2
Getting addresses from network interface table...
Cluster node1_clus1 169.254.209.69 node1 e0a
Cluster node1_clus2 169.254.49.125 node1 e0b
Cluster node2_clus1 169.254.47.194 node2 e0a
Cluster node2_clus2 169.254.19.183 node2 e0b
Local = 169.254.47.194 169.254.19.183
Remote = 169.254.209.69 169.254.49.125
Cluster Vserver Id = 4294967293
Ping status:

Basic connectivity succeeds on 4 path(s)
Basic connectivity fails on 0 path(s)

Detected 9000 byte MTU on 4 path(s):
Local 169.254.47.194 to Remote 169.254.209.69
Local 169.254.47.194 to Remote 169.254.49.125
Local 169.254.19.183 to Remote 169.254.209.69
Local 169.254.19.183 to Remote 169.254.49.125
Larger than PMTU communication succeeds on 4 path(s)
RPC status:
2 paths up, 0 paths down (tcp check)
2 paths up, 0 paths down (udp check)
```

6. If you suppressed automatic case creation, reenable it by invoking an AutoSupport message:

   ```
   system node autosupport invoke -node * -type all -message MAINT=END
   ```

   For more information, see NetApp KB Article 1010449: How to suppress automatic case creation during scheduled maintenance windows.

7. Change the privilege level back to admin:

   ```
   set -privilege admin
   ```

Cisco 3232C storage switches

Replace a Cisco Nexus 3232C storage switch

Follow these steps to replace a defective Cisco Nexus 3232C storage switch. This is a non-disruptive procedure.

Review requirements

The existing network configuration must have the following characteristics:

- The Cisco Ethernet Switches page has the latest RCF and NX-OS versions on your switches.
- Management connectivity must exist on both switches.

> Make sure that all troubleshooting steps have been completed to confirm that your switch needs replacing.

The replacement Cisco Nexus 3232C switch must have the following characteristics:

- Management network connectivity must be functional.
- Console access to the replacement switch must be in place.
- The appropriate RCF and NX-OS operating system image must be loaded onto the switch.
- Initial customization of the switch must be complete.

Replace the switch

This procedure replaces the second Nexus 3232C storage switch S2 with the new 3232C switch NS2. The two nodes are node1 and node2.

Step 1: Confirm the switch to be replaced is S2

1. If AutoSupport is enabled on this cluster, suppress automatic case creation by invoking an AutoSupport message:
   `system node autosupport invoke -node * -type all - message MAINT=xh`

   x is the duration of the maintenance window in hours.

   > The AutoSupport message notifies technical support of this maintenance task so that automatic case creation is suppressed during the maintenance window.

2. Check on the health status of the storage node ports to make sure that there is connection to storage switch S1:

   `storage port show -port-type ENET`

Show example

```
storage::*> storage port show -port-type ENET
                                     Speed                       VLAN
Node                Port Type  Mode    (Gb/s) State    Status      ID
------------------- ---- ----- ------- ------ -------- --------- ----
node1
                    e3a  ENET  storage    100 enabled  online      30
                    e3b  ENET  storage      0 enabled  offline     30
                    e7a  ENET  storage      0 enabled  offline     30
                    e7b  ENET  storage      0 enabled  offline     30
node2
                    e3a  ENET  storage    100 enabled  online      30
                    e3b  ENET  storage      0 enabled  offline     30
                    e7a  ENET  storage      0 enabled  offline     30
                    e7b  ENET  storage      0 enabled  offline     30
```

3. Verify that storage switch S1 is available:

   `network device-discovery show`

Show example

```
storage::*> network device-discovery show
Node/       Local  Discovered
Protocol    Port   Device (LLDP: ChassisID)  Interface
Platform
----------- ------ ------------------------- -----------------
----------------
node1/cdp
            e3a    S1                        Ethernet1/1
NX3232C
            e4a    node2                     e4a               AFF-
A700
            e4e    node2                     e4e               AFF-
A700
node1/lldp
            e3a    S1                        Ethernet1/1       -
            e4a    node2                     e4a               -
            e4e    node2                     e4e               -
node2/cdp
            e3a    S1                        Ethernet1/2
NX3232C
            e4a    node1                     e4a               AFF-
A700
            e4e    node1                     e4e               AFF-
A700
node2/lldp
            e3a    S1                        Ethernet1/2       -
            e4a    node1                     e4a               -
            e4e    node1                     e4e               -
```

4. Run the `show lldp neighbors` command on the working switch to confirm that you can see both nodes and all shelves:

   `show lldp neighbors`

Show example

```
S1# show lldp neighbors
Capability codes:
  (R) Router, (B) Bridge, (T) Telephone, (C) DOCSIS Cable Device
  (W) WLAN Access Point, (P) Repeater, (S) Station, (O) Other
Device ID               Local Intf      Hold-time  Capability  Port
ID
node1                   Eth1/1          121        S           e3a
node2                   Eth1/2          121        S           e3a
SHFGD2008000011         Eth1/5          121        S           e0a
SHFGD2008000011         Eth1/6          120        S           e0a
SHFGD2008000022         Eth1/7          120        S           e0a
SHFGD2008000022         Eth1/8          120        S           e0a
```

Step 2: Configure cabling

1. Verify the shelf ports in the storage system:

   `storage shelf port show -fields remote-device,remote-port`

   Show example

```
storage::*> storage shelf port show -fields remote-device,remote-
port

shelf  id  remote-port  remote-device
-----  --  -----------  -------------
3.20   0   Ethernet1/5  S1
3.20   1   -            -
3.20   2   Ethernet1/6  S1
3.20   3   -            -
3.30   0   Ethernet1/7  S1
3.20   1   -            -
3.30   2   Ethernet1/8  S1
3.20   3   -            -
```

2. Remove all cables attached to storage switch S2.
3. Reconnect all cables to the replacement switch NS2.

Step 3: Verify all device configurations on switch NS2

1. Verify the health status of the storage node ports:

```
storage port show -port-type ENET
```

Show example

```
storage::*> storage port show -port-type ENET
                                       Speed
VLAN
Node                Port Type  Mode    (Gb/s) State    Status
ID
------------------ ---- ----- ------- ------ -------- ------------
---
node1
                    e3a  ENET  storage    100 enabled  online
30
                    e3b  ENET  storage      0 enabled  offline
30
                    e7a  ENET  storage      0 enabled  offline
30
                    e7b  ENET  storage    100 enabled  online
30
node2
                    e3a  ENET  storage    100 enabled  online
30
                    e3b  ENET  storage      0 enabled  offline
30
                    e7a  ENET  storage      0 enabled  offline
30
                    e7b  ENET  storage    100 enabled  online
30
```

2. Verify that both switches are available:

```
network device-discovery show
```

Show example

```
storage::*> network device-discovery show
Node/       Local  Discovered
Protocol    Port   Device (LLDP: ChassisID)  Interface
Platform
----------- ------ ------------------------- ----------------
--------
node1/cdp
            e3a    S1                        Ethernet1/1
NX3232C
            e4a    node2                     e4a               AFF-
A700
            e4e    node2                     e4e               AFF-
A700
            e7b    NS2                       Ethernet1/1
NX3232C
node1/lldp
            e3a    S1                        Ethernet1/1       -
            e4a    node2                     e4a               -
            e4e    node2                     e4e               -
            e7b    NS2                       Ethernet1/1       -
node2/cdp
            e3a    S1                        Ethernet1/2
NX3232C
            e4a    node1                     e4a               AFF-
A700
            e4e    node1                     e4e               AFF-
A700
            e7b    NS2                       Ethernet1/2
NX3232C
node2/lldp
            e3a    S1                        Ethernet1/2       -
            e4a    node1                     e4a               -
            e4e    node1                     e4e               -
            e7b    NS2                       Ethernet1/2       -
```

3. Verify the shelf ports in the storage system:

   `storage shelf port show -fields remote-device,remote-port`

Show example

```
storage::*> storage shelf port show -fields remote-device,remote-
port
shelf id remote-port remote-device
----- -- ----------- -------------
3.20  0  Ethernet1/5 S1
3.20  1  Ethernet1/5 NS2
3.20  2  Ethernet1/6 S1
3.20  3  Ethernet1/6 NS2
3.30  0  Ethernet1/7 S1
3.20  1  Ethernet1/7 NS2
3.30  2  Ethernet1/8 S1
3.20  3  Ethernet1/8 NS2
```

4. If you suppressed automatic case creation, re-enable it by invoking an AutoSupport message:

```
system node autosupport invoke -node * -type all -message MAINT=END
```

What's next?

Configure switch health monitoring

Cisco Nexus 3132Q-V

Get started

Installation and setup workflow for Cisco Nexus 3132Q-V switches

Cisco Nexus 3132Q-V switches can be used as cluster switches in your AFF or FAS cluster. Cluster switches allow you to build ONTAP clusters with more than two nodes.

Follow these workflow steps to install and setup your to Cisco Nexus 3132Q-V switch.

1. **Configuration requirements**

Review the configuration requirements for the 3132Q-V cluster switch.

2. **Required documentation**

Review specific switch and controller documentation to set up your 3132Q-V switches and the ONTAP cluster.

3. **Smart Call Home requirements**

Review the requirements for the Cisco Smart Call Home feature, used to monitor the hardware and software components on your network.

4 Install the hardware

Install the switch hardware.

5 Configure the software

Configure the switch software.

Configuration requirements for Cisco Nexus 3132Q-V switches

For Cisco Nexus 3132Q-V switch installation and maintenance, be sure to review network and configuration requirements.

Configuration requirements

To configure your cluster, you need the appropriate number and type of cables and cable connectors for your switches. Depending on the type of switch you are initially configuring, you need to connect to the switch console port with the included console cable; you also need to provide specific network information.

Network requirements

You need the following network information for all switch configurations:

- IP subnet for management network traffic.
- Host names and IP addresses for each of the storage system controllers and all applicable switches.
- Most storage system controllers are managed through the e0M interface by connecting to the Ethernet service port (wrench icon). On AFF A800 and AFF A700 systems, the e0M interface uses a dedicated Ethernet port.

Refer to the Hardware Universe for latest information. See What additional information do I need to install my equipment that is not in HWU? for more information about switch installation requirements.

What's next

After you've reviewed the configuration requirements, you can review the required documentation.

Documentation requirements for Cisco Nexus 3132Q-V switches

For Cisco Nexus 3132Q-V switch installation and maintenance, be sure to review all the recommended documentation.

Switch documentation

To set up the Cisco Nexus 3132Q-V switches, you need the following documentation from the Cisco Nexus 3000 Series Switches Support page.

Document title	Description
Nexus 3000 Series Hardware Installation Guide	Provides detailed information about site requirements, switch hardware details, and installation options.

Document title	Description
Cisco Nexus 3000 Series Switch Software Configuration Guides (choose the guide for the NX-OS release installed on your switches)	Provides initial switch configuration information that you need before you can configure the switch for ONTAP operation.
Cisco Nexus 3000 Series NX-OS Software Upgrade and Downgrade Guide (choose the guide for the NX-OS release installed on your switches)	Provides information on how to downgrade the switch to ONTAP supported switch software, if necessary.
Cisco Nexus 3000 Series NX-OS Command Reference Master Index	Provides links to the various command references provided by Cisco.
Cisco Nexus 3000 MIBs Reference	Describes the Management Information Base (MIB) files for the Nexus 3000 switches.
Nexus 3000 Series NX-OS System Message Reference	Describes the system messages for Cisco Nexus 3000 series switches, those that are informational, and others that might help diagnose problems with links, internal hardware, or the system software.
Cisco Nexus 3000 Series NX-OS Release Notes (choose the notes for the NX-OS release installed on your switches)	Describes the features, bugs, and limitations for the Cisco Nexus 3000 Series.
Regulatory, Compliance, and Safety Information for the Cisco Nexus 6000, Cisco Nexus 5000 Series, Cisco Nexus 3000 Series, and Cisco Nexus 2000 Series	Provides international agency compliance, safety, and statutory information for the Nexus 3000 series switches.

ONTAP systems documentation

To set up an ONTAP system, you need the following documents for your version of the operating system from ONTAP 9.

Name	Description
Controller-specific *Installation and Setup Instructions*	Describes how to install NetApp hardware.
ONTAP documentation	Provides detailed information about all aspects of the ONTAP releases.
Hardware Universe	Provides NetApp hardware configuration and compatibility information.

Rail kit and cabinet documentation

To install a 3132Q-V Cisco switch in a NetApp cabinet, see the following hardware documentation.

Name	Description
42U System Cabinet, Deep Guide	Describes the FRUs associated with the 42U system cabinet, and provides maintenance and FRU replacement instructions.
Install Cisco Nexus 3132Q-V switch in a NetApp Cabinet	Describes how to install a Cisco Nexus 3132Q-V switch in a four-post NetApp cabinet.

Smart Call Home requirements

To use Smart Call Home, you must configure a cluster network switch to communicate using email with the Smart Call Home system. In addition, you can optionally set up your cluster network switch to take advantage of Cisco's embedded Smart Call Home support feature.

Smart Call Home monitors the hardware and software components on your network. When a critical system configuration occurs, it generates an email-based notification and raises an alert to all the recipients that are configured in your destination profile.

Smart Call Home monitors the hardware and software components on your network. When a critical system configuration occurs, it generates an email-based notification and raises an alert to all the recipients that are configured in your destination profile.

Before you can use Smart Call Home, be aware of the following requirements:

- An email server must be in place.
- The switch must have IP connectivity to the email server.
- The contact name (SNMP server contact), phone number, and street address information must be configured. This is required to determine the origin of messages received.
- A CCO ID must be associated with an appropriate Cisco SMARTnet Service contract for your company.
- Cisco SMARTnet Service must be in place for the device to be registered.

The Cisco support site contains information about the commands to configure Smart Call Home.

Install hardware

Hardware install workflow for Cisco Nexus 3132Q-V switches

To install and configure the hardware for a 3132Q-V cluster switch, follow these steps:

1. **Complete the cabling worksheet**

The sample cabling worksheet provides examples of recommended port assignments from the switches to the controllers. The blank worksheet provides a template that you can use in setting up your cluster.

2 Install the switch

Install the 3132Q-V switch.

3 Install the switch in a NetApp cabinet

Install the 3132Q-V switch and pass-through panel in a NetApp cabinet as required.

4 Review cabling and configuration

Review support for NVIDIA Ethernet ports.

Complete Cisco Nexus 3132Q-V cabling worksheet

If you want to document the supported platforms, download a PDF of this page and complete the cabling worksheet.

The sample cabling worksheet provides examples of recommended port assignments from the switches to the controllers. The blank worksheet provides a template that you can use in setting up your cluster.

Each switch can be configured as a single 40GbE port or 4 x 10GbE ports.

Sample cabling worksheet

The sample port definition on each pair of switches is as follows:

Cluster switch A		Cluster switch B	
Switch port	Node and port usage	Switch port	Node and port usage
1	4x10G/40G node	1	4x10G/40G node
2	4x10G/40G node	2	4x10G/40G node
3	4x10G/40G node	3	4x10G/40G node
4	4x10G/40G node	4	4x10G/40G node
5	4x10G/40G node	5	4x10G/40G node
6	4x10G/40G node	6	4x10G/40G node
7	4x10G/40G node	7	4x10G/40G node
8	4x10G/40G node	8	4x10G/40G node
9	4x10G/40G node	9	4x10G/40G node

Cluster switch A		Cluster switch B	
10	4x10G/40G node	10	4x10G/40G node
11	4x10G/40G node	11	4x10G/40G node
12	4x10G/40G node	12	4x10G/40G node
13	4x10G/40G node	13	4x10G/40G node
14	4x10G/40G node	14	4x10G/40G node
15	4x10G/40G node	15	4x10G/40G node
16	4x10G/40G node	16	4x10G/40G node
17	4x10G/40G node	17	4x10G/40G node
18	4x10G/40G node	18	4x10G/40G node
19	40G node 19	19	40G node 19
20	40G node 20	20	40G node 20
21	40G node 21	21	40G node 21
22	40G node 22	22	40G node 22
23	40G node 23	23	40G node 23
24	40G node 24	24	40G node 24
25 through 30	Reserved	25 through 30	Reserved
31	40G ISL to switch B port 31	31	40G ISL to switch A port 31
32	40G ISL to switch B port 32	32	40G ISL to switch A port 32

Blank cabling worksheet

You can use the blank cabling worksheet to document the platforms that are supported as nodes in a cluster. The *Supported Cluster Connections* section of the Hardware Universe defines the cluster ports used by the platform.

Cluster switch A		Cluster switch B	
Switch port	Node/port usage	Switch port	Node/port usage
1		1	
2		2	
3		3	
4		4	
5		5	
6		6	
7		7	
8		8	
9		9	
10		10	
11		11	
12		12	
13		13	
14		14	
15		15	
16		16	
17		17	
18		18	
19		19	
20		20	
21		21	

Cluster switch A		Cluster switch B	
22		22	
23		23	
24		24	
25 through 30	Reserved	25 through 30	Reserved
31	40G ISL to switch B port 31	31	40G ISL to switch A port 31
32	40G ISL to switch B port 32	32	40G ISL to switch A port 32

What's next

After you've completed your cabling worksheets, you install the switch.

Install the 3132Q-V cluster switch

Follow this procedure to set up and configure the Cisco Nexus 3132Q-V switch.

Before you begin

Make sure you have the following:

- Access to an HTTP, FTP, or TFTP server at the installation site to download the applicable NX-OS and Reference Configuration File (RCF) releases.
- Applicable NX-OS version, downloaded from the Cisco Software Download page.
- Applicable licenses, network and configuration information, and cables.
- Completed cabling worksheets.
- Applicable NetApp cluster network and management network RCFs downloaded from the NetApp Support Site at mysupport.netapp.com. All Cisco cluster network and management network switches arrive with the standard Cisco factory-default configuration. These switches also have the current version of the NX-OS software but do not have the RCFs loaded.
- Required switch and ONTAP documentation.

Steps

1. Rack the cluster network and management network switches and controllers.

If you are installing the…	Then…
Cisco Nexus 9336C-FX2 in a NetApp system cabinet	See the *Installing a Cisco Nexus 3132Q-V cluster switch and pass-through panel in a NetApp cabinet* guide for instructions to install the switch in a NetApp cabinet.

If you are installing the…	Then…
Equipment in a Telco rack	See the procedures provided in the switch hardware installation guides and the NetApp installation and setup instructions.

2. Cable the cluster network and management network switches to the controllers using the completed cabling worksheets.
3. Power on the cluster network and management network switches and controllers.

What's next?

Optionally, you can install a Cisco Nexus 3132Q-V switch in a NetApp cabinet. Otherwise, you can review the cabling and configuration requirements.

Install a Cisco Nexus 3132Q-V cluster switch in a NetApp cabinet

Depending on your configuration, you might need to install the Cisco Nexus 3132Q-V switch and pass-through panel in a NetApp cabinet with the standard brackets that are included with the switch.

Before you begin

- The initial preparation requirements, kit contents, and safety precautions in the Cisco Nexus 3000 Series Hardware Installation Guide. Review these documents before you begin the procedure.
- The pass-through panel kit, available from NetApp (part number X8784-R6). The NetApp pass-through panel kit contains the following hardware:
  - One pass-through blanking panel
  - Four 10-32 x .75 screws
  - Four 10-32 clip nuts
- Eight 10-32 or 12-24 screws and clip nuts to mount the brackets and slider rails to the front and rear cabinet posts.
- Cisco standard rail kit to install the switch in a NetApp cabinet.

> The jumper cords are not included with the pass-through kit and should be included with your switches. If they were not shipped with the switches, you can order them from NetApp (part number X1558A-R6).

Steps

1. Install the pass-through blanking panel in the NetApp cabinet.
   a. Determine the vertical location of the switches and blanking panel in the cabinet.

      In this procedure, the blanking panel will be installed in U40.

   b. Install two clip nuts on each side in the appropriate square holes for front cabinet rails.
   c. Center the panel vertically to prevent intrusion into adjacent rack space, and then tighten the screws.
   d. Insert the female connectors of both 48-inch jumper cords from the rear of the panel and through the brush assembly.

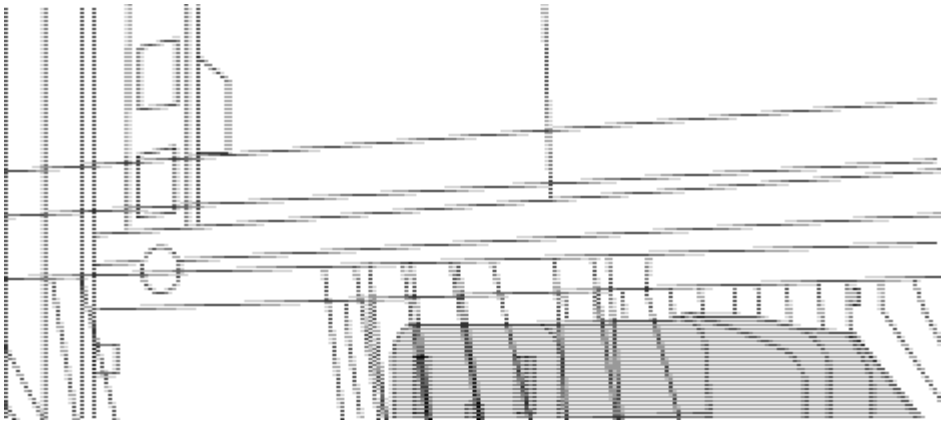

(1) Female connector of the jumper cord.

2. Install the rack-mount brackets on the Nexus 3132Q-V switch chassis.
   a. Position a front rack-mount bracket on one side of the switch chassis so that the mounting ear is aligned with the chassis faceplate (on the PSU or fan side), and then use four M4 screws to attach the bracket to the chassis.

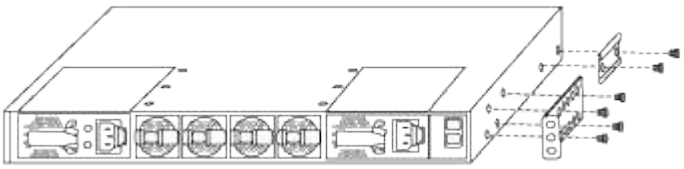

   b. Repeat step 2a with the other front rack-mount bracket on the other side of the switch.
   c. Install the rear rack-mount bracket on the switch chassis.
   d. Repeat step 2c with the other rear rack-mount bracket on the other side of the switch.
3. Install the clip nuts in the square hole locations for all four IEA posts.

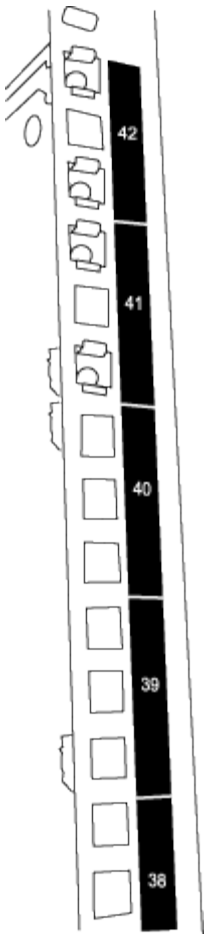

The two 3132Q-V switches will always be mounted in the top 2U of the cabinet RU41 and 42.

4. Install the slider rails in the cabinet.
   a. Position the first slider rail at the RU42 mark on the back side of the rear left post, insert screws with the matching thread type, and then tighten the screws with your fingers.

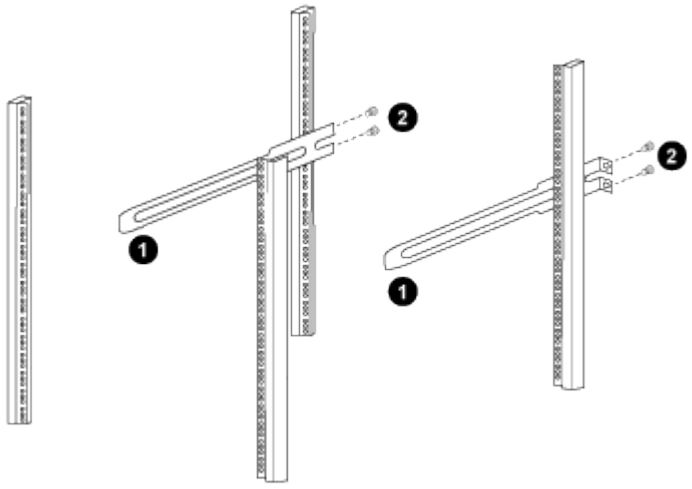

(1) As you gently slide the slider rail, align it to the screw holes in the rack.

(2) Tighten the screws of the slider rails to the cabinet posts.

   b. Repeat step 4a for the right side rear post.

c. Repeat steps 4a and 4b at the RU41 locations on the cabinet.

5. Install the switch in the cabinet.

> This step requires two people: one person to support the switch from the front and another to guide the switch into the rear slider rails.

a. Position the back of the switch at RU41.

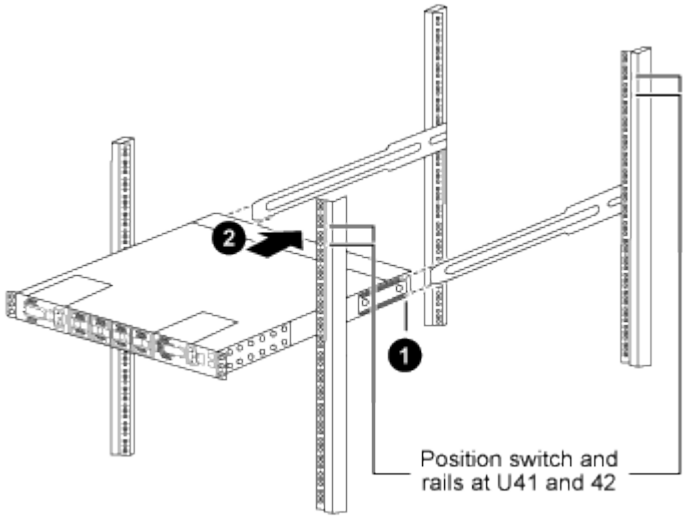

(1) As the chassis is pushed toward the rear posts, align the two rear rack-mount guides with the slider rails.

(2) Gently slide the switch until the front rack-mount brackets are flush with the front posts.

b. Attach the switch to the cabinet.

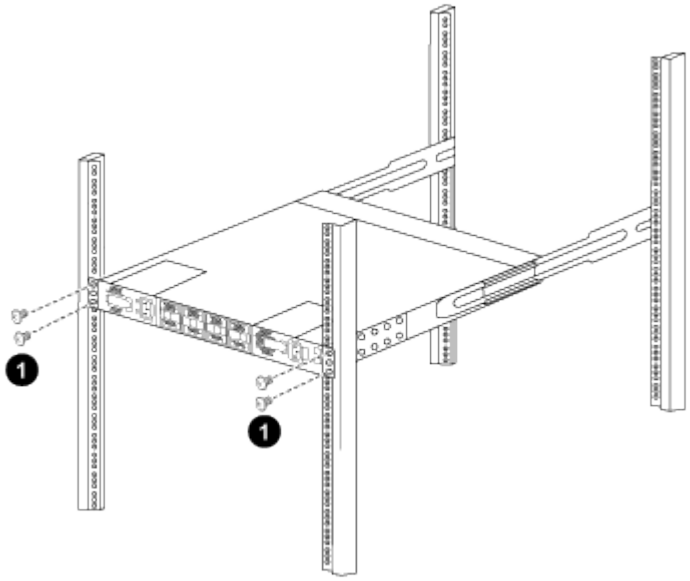

(1) With one person holding the front of the chassis level, the other person should fully tighten the four rear screws to the cabinet posts.

c. With the chassis now supported without assistance, fully tighten the front screws to the posts.

d. Repeat steps 5a through 5c for the second switch at the RU42 location.

> By using the fully installed switch as a support, you do not need to hold the front of the second switch during the installation process.

6. When the switches are installed, connect the jumper cords to the switch power inlets.
7. Connect the male plugs of both jumper cords to the closest available PDU outlets.

> To maintain redundancy, the two cords must be connected to different PDUs.

8. Connect the management port on each 3132Q-V switch to either of the management switches (if ordered) or connect them directly to your management network.

   The management port is the upper-right port located on the PSU side of the switch. The CAT6 cable for each switch needs to be routed through the pass-through panel after the switches are installed to connect to the management switches or management network.

Review cabling and configuration considerations

Before configuring your Cisco 3132Q-V switch, review the following considerations.

Support for NVIDIA CX6, CX6-DX, and CX7 Ethernet ports

If connecting a switch port to an ONTAP controller using NVIDIA ConnectX-6 (CX6), ConnectX-6 Dx (CX6-DX), or ConnectX-7 (CX7) NIC ports, you must hard-code the switch port speed.

```
(cs1)(config)# interface Ethernet1/19
(cs1)(config-if)# speed 40000
(cs1)(config-if)# no negotiate auto
(cs1)(config-if)# exit
(cs1)(config)# exit
Save the changes:
(cs1)# copy running-config startup-config
```

See the Hardware Universe for more information on switch ports. See What additional information do I need to install my equipment that is not in HWU? for more information about switch installation requirements.

Configure software

Software install workflow for Cisco Nexus 3132Q-V cluster switches

To install and configure the software for a Cisco Nexus 3132Q-V switch and install or upgrade the Reference Configuration File (RCF), follow these steps:

1. **Configure the switch**

Configure the 3132Q-V cluster switch.

2 Prepare to install the NX-OS software and RCF

The Cisco NX-OS software and RCF must be installed on Cisco 3132Q-V cluster switches.

3 Install or upgrade the NX-OS software

Download and install or upgrade the NX-OS software on the Cisco 3132Q-V cluster switch.

4 Install or upgrade the RCF

Install or upgrade the RCF after setting up the Cisco 3132Q-V switch.

5 Verify SSH configuration

Verify thats SSH is enabled on the switches to use the Ethernet Switch Health Monitor (CSHM) and log collection features.

6 Reset the switch to factory defaults

Erase the 3132Q-V cluster switch settings.

Configure the Cisco Nexus 3132Q-V switch

Follow this procedure to configure the Cisco Nexus 3132Q-V switch.

Before you begin

- Access to an HTTP, FTP or TFTP server at the installation site to download the applicable NX-OS and reference configuration file (RCF) releases.
- Applicable NX-OS version, downloaded from the Cisco software download page.
- Required network switch documentation, controller documentation, and ONTAP documentation. For more information, see Required documentation.
- Applicable licenses, network and configuration information, and cables.
- Completed cabling worksheets. See Complete Cisco Nexus 3132Q-V cabling worksheet.
- Applicable NetApp cluster network and management network RCFs, downloaded from the NetApp Support Site at mysupport.netapp.com for the switches that you receive. All Cisco cluster network and management network switches arrive with the standard Cisco factory-default configuration. These switches also have the current version of the NX-OS software, but do not have the RCFs loaded.

Steps

1. Rack the cluster network and management network switches and controllers.

If you are installing your…	Then…
Cisco Nexus 3132Q-V in a NetApp system cabinet	See the *Installing a Cisco Nexus 3132Q-V cluster switch and pass-through panel in a NetApp cabinet* guide for instructions to install the switch in a NetApp cabinet.

If you are installing your…	Then…
Equipment in a Telco rack	See the procedures provided in the switch hardware installation guides and the NetApp installation and setup instructions.

2. Cable the cluster network and management network switches to the controllers using the completed cabling worksheet, as described in Complete Cisco Nexus 3132Q-V cabling worksheet.
3. Power on the cluster network and management network switches and controllers.
4. Perform an initial configuration of the cluster network switches.

   Provide applicable responses to the following initial setup questions when you first boot the switch. Your site's security policy defines the responses and services to enable.

Prompt	Response
Abort Auto Provisioning and continue with normal setup? (yes/no)	Respond with **yes**. The default is no.
Do you want to enforce secure password standard? (yes/no)	Respond with **yes**. The default is yes.
Enter the password for admin:	The default password is "admin"; you must create a new, strong password. A weak password can be rejected.
Would you like to enter the basic configuration dialog? (yes/no)	Respond with **yes** at the initial configuration of the switch.
Create another login account? (yes/no)	Your answer depends on your site's policies on alternate administrators. The default is **no**.
Configure read-only SNMP community string? (yes/no)	Respond with **no**. The default is no.
Configure read-write SNMP community string? (yes/no)	Respond with **no**. The default is no.
Enter the switch name.	The switch name is limited to 63 alphanumeric characters.
Continue with Out-of-band (mgmt0) management configuration? (yes/no)	Respond with **yes** (the default) at that prompt. At the mgmt0 IPv4 address: prompt, enter your IP address: ip_address.
Configure the default-gateway? (yes/no)	Respond with **yes**. At the IPv4 address of the default-gateway: prompt, enter your default_gateway.
Configure advanced IP options? (yes/no)	Respond with **no**. The default is no.

Prompt	Response
Enable the telnet service? (yes/no)	Respond with **no**. The default is no.
Enabled SSH service? (yes/no)	Respond with **yes**. The default is yes. SSH is recommended when using Ethernet Switch Health Monitor (CSHM) for its log collection features. SSHv2 is also recommended for enhanced security.
Enter the type of SSH key you want to generate (dsa/rsa/rsa1).	The default is **rsa**.
Enter the number of key bits (1024-2048).	Enter the key bits from 1024-2048.
Configure the NTP server? (yes/no)	Respond with **no**. The default is no.
Configure default interface layer (L3/L2):	Respond with **L2**. The default is L2.
Configure default switch port interface state (shut/noshut):	Respond with **noshut**. The default is noshut.
Configure CoPP system profile (strict/moderate/lenient/dense):	Respond with **strict**. The default is strict.
Would you like to edit the configuration? (yes/no)	You should see the new configuration at this point. Review and make any necessary changes to the configuration you just entered. Respond with **no** at the prompt if you are satisfied with the configuration. Respond with **yes** if you want to edit your configuration settings.
Use this configuration and save it? (yes/no)	Respond with **yes** to save the configuration. This automatically updates the kickstart and system images. If you do not save the configuration at this stage, none of the changes will be in effect the next time you reboot the switch.

5. Verify the configuration choices you made in the display that appears at the end of the setup, and make sure that you save the configuration.
6. Check the version on the cluster network switches, and if necessary, download the NetApp-supported version of the software to the switches from the Cisco software download page.

What's next?

After you've configured your switches, you prepare to install the NX-OS and RCF.

Prepare to install NX-OS software and Reference Configuration File

Before you install the NX-OS software and the Reference Configuration File (RCF), follow this procedure.

About the examples

The examples in this procedure use two nodes. These nodes use two 10GbE cluster interconnect ports `e0a` and `e0b`.

See the Hardware Universe to verify the correct cluster ports on your platforms. See What additional information do I need to install my equipment that is not in HWU? for more information about switch installation requirements.

> The command outputs might vary depending on different releases of ONTAP.

The examples in this procedure use the following switch and node nomenclature:

- The names of the two Cisco switches are `cs1` and `cs2`.
- The node names are `cluster1-01` and `cluster1-02`.
- The cluster LIF names are `cluster1-01_clus1` and `cluster1-01_clus2` for cluster1-01 and `cluster1-02_clus1` and `cluster1-02_clus2` for cluster1-02.
- The `cluster1::*>` prompt indicates the name of the cluster.

About this task

The procedure requires the use of both ONTAP commands and Cisco Nexus 3000 Series Switches commands; ONTAP commands are used unless otherwise indicated.

Steps

1. If AutoSupport is enabled on this cluster, suppress automatic case creation by invoking an AutoSupport message:

   ```
   system node autosupport invoke -node * -type all -message MAINT=xh
   ```

   where *x* is the duration of the maintenance window in hours.

   > The AutoSupport message notifies technical support of this maintenance task so that automatic case creation is suppressed during the maintenance window.

2. Change the privilege level to advanced, entering **y** when prompted to continue:

   ```
   set -privilege advanced
   ```

   The advanced prompt (`*>`) appears.

3. Display how many cluster interconnect interfaces are configured in each node for each cluster interconnect switch:

   ```
   network device-discovery show -protocol cdp
   ```

Show example

```
cluster1::*> network device-discovery show -protocol cdp

Node/       Local  Discovered
Protocol    Port   Device (LLDP: ChassisID)  Interface
Platform
----------- ------ ------------------------- -----------------
--------
cluster1-02/cdp
            e0a    cs1                       Eth1/2            N3K-
C3132Q-V
            e0b    cs2                       Eth1/2            N3K-
C3132Q-V
cluster1-01/cdp
            e0a    cs1                       Eth1/1            N3K-
C3132Q-V
            e0b    cs2                       Eth1/1            N3K-
C3132Q-V
```

4. Check the administrative or operational status of each cluster interface.
   a. Display the network port attributes:

      ```
      network port show –ipspace Cluster
      ```

Show example

```
cluster1::*> network port show -ipspace Cluster

Node: cluster1-02
                                                  Speed(Mbps)
Health
Port      IPspace      Broadcast Domain Link MTU  Admin/Oper
Status
--------- ------------ ---------------- ---- ---- -----------
------
e0a       Cluster      Cluster          up   9000  auto/10000
healthy
e0b       Cluster      Cluster          up   9000  auto/10000
healthy

Node: cluster1-01
                                                  Speed(Mbps)
Health
Port      IPspace      Broadcast Domain Link MTU  Admin/Oper
Status
--------- ------------ ---------------- ---- ---- -----------
------
e0a       Cluster      Cluster          up   9000  auto/10000
healthy
e0b       Cluster      Cluster          up   9000  auto/10000
healthy
```

b. Display information about the LIFs:

```
network interface show -vserver Cluster
```

Show example

```
cluster1::*> network interface show -vserver Cluster

            Logical            Status     Network
Current       Current Is
Vserver     Interface          Admin/Oper Address/Mask       Node
Port    Home
----------- ------------------ ---------- ------------------
------------ ------- ----
Cluster
            cluster1-01_clus1  up/up      169.254.209.69/16
cluster1-01   e0a     true
            cluster1-01_clus2  up/up      169.254.49.125/16
cluster1-01   e0b     true
            cluster1-02_clus1  up/up      169.254.47.194/16
cluster1-02   e0a     true
            cluster1-02_clus2  up/up      169.254.19.183/16
cluster1-02   e0b     true
```

5. Verify the connectivity of the remote cluster interfaces:

ONTAP 9.9.1 and later

You can use the `network interface check cluster-connectivity` command to start an accessibility check for cluster connectivity and then display the details:

`network interface check cluster-connectivity start` and `network interface check cluster-connectivity show`

```
cluster1::*> network interface check cluster-connectivity start
```

NOTE: Wait for a number of seconds before running the show command to display the details.

```
cluster1::*> network interface check cluster-connectivity show
                                  Source              Destination
Packet
Node   Date                       LIF                 LIF
Loss
------ -------------------------- ------------------
------------------ -----------
cluster1-01
       3/5/2022 19:21:18 -06:00   cluster1-01_clus2   cluster1-02_clus1
none
       3/5/2022 19:21:20 -06:00   cluster1-01_clus2   cluster1-02_clus2
none

cluster1-02
       3/5/2022 19:21:18 -06:00   cluster1-02_clus2   cluster1-01_clus1
none
       3/5/2022 19:21:20 -06:00   cluster1-02_clus2   cluster1-01_clus2
none
```

All ONTAP releases

For all ONTAP releases, you can also use the `cluster ping-cluster -node <name>` command to check the connectivity:

```
cluster ping-cluster -node <name>
```

```
cluster1::*> cluster ping-cluster -node local
Host is cluster1-02
Getting addresses from network interface table...
Cluster cluster1-01_clus1 169.254.209.69 cluster1-01     e0a
Cluster cluster1-01_clus2 169.254.49.125 cluster1-01     e0b
Cluster cluster1-02_clus1 169.254.47.194 cluster1-02     e0a
Cluster cluster1-02_clus2 169.254.19.183 cluster1-02     e0b
Local = 169.254.47.194 169.254.19.183
Remote = 169.254.209.69 169.254.49.125
Cluster Vserver Id = 4294967293
Ping status:....
Basic connectivity succeeds on 4 path(s)
Basic connectivity fails on 0 path(s)
................
Detected 9000 byte MTU on 4 path(s):
    Local 169.254.19.183 to Remote 169.254.209.69
    Local 169.254.19.183 to Remote 169.254.49.125
    Local 169.254.47.194 to Remote 169.254.209.69
    Local 169.254.47.194 to Remote 169.254.49.125
Larger than PMTU communication succeeds on 4 path(s)
RPC status:
2 paths up, 0 paths down (tcp check)
2 paths up, 0 paths down (udp check)
```

6. Verify that the `auto-revert` command is enabled on all cluster LIFs:

`network interface show -vserver Cluster -fields auto-revert`

Show example

```
cluster1::*> network interface show -vserver Cluster -fields auto-
revert

          Logical
Vserver   Interface           Auto-revert
--------- ------------------- ------------
Cluster
          cluster1-01_clus1   true
          cluster1-01_clus2   true
          cluster1-02_clus1   true
          cluster1-02_clus2   true
```

What's next?

After you've prepared to install the NX-OS software and RCF, you install the NX-OS software.

Install the NX-OS software

Follow this procedure to install the NX-OS software on the Nexus 3132Q-V cluster switch.

Review requirements

Before you begin

- A current backup of the switch configuration.
- A fully functioning cluster (no errors in the logs or similar issues).

Suggested documentation

- Cisco Ethernet switch. Consult the switch compatibility table for the supported ONTAP and NX-OS versions.
- Cisco Nexus 3000 Series Switches. Consult the appropriate software and upgrade guides available on the Cisco web site for complete documentation on the Cisco switch upgrade and downgrade procedures.

Install the software

About this task

The procedure requires the use of both ONTAP commands and Cisco Nexus 3000 Series Switches commands; ONTAP commands are used unless otherwise indicated.

Be sure to complete the procedure in Prepare to install NX-OS software and Reference Configuration File, and then follow the steps below.

Steps

1. Connect the cluster switch to the management network.
2. Use the `ping` command to verify connectivity to the server hosting the NX-OS software and the RCF.

   Show example

   ```
   cs2# ping 172.19.2.1 vrf management
   Pinging 172.19.2.1 with 0 bytes of data:

   Reply From 172.19.2.1: icmp_seq = 0. time= 5910 usec.
   ```

3. Display the cluster ports on each node that are connected to the cluster switches:

   ```
   network device-discovery show
   ```

Show example

```
cluster1::*> network device-discovery show
Node/       Local  Discovered
Protocol    Port   Device (LLDP: ChassisID)  Interface
Platform
----------- ------ ------------------------- ----------------
------------
cluster1-01/cdp
            e0a    cs1                       Ethernet1/7       N3K-
C3132Q-V
            e0d    cs2                       Ethernet1/7       N3K-
C3132Q-V
cluster1-02/cdp
            e0a    cs1                       Ethernet1/8       N3K-
C3132Q-V
            e0d    cs2                       Ethernet1/8       N3K-
C3132Q-V
cluster1-03/cdp
            e0a    cs1                       Ethernet1/1/1     N3K-
C3132Q-V
            e0b    cs2                       Ethernet1/1/1     N3K-
C3132Q-V
cluster1-04/cdp
            e0a    cs1                       Ethernet1/1/2     N3K-
C3132Q-V
            e0b    cs2                       Ethernet1/1/2     N3K-
C3132Q-V
cluster1::*>
```

4. Check the administrative and operational status of each cluster port.
   a. Verify that all the cluster ports are **up** with a healthy status:

      ```
      network port show -role cluster
      ```

Show example

```
cluster1::*> network port show -role cluster

Node: cluster1-01

Ignore
                                                        Speed(Mbps)
Health   Health
Port      IPspace      Broadcast Domain Link MTU  Admin/Oper
Status   Status
--------- ------------ ---------------- ---- ---- -----------
-------- ------
e0a       Cluster      Cluster          up   9000  auto/100000
healthy false
e0d       Cluster      Cluster          up   9000  auto/100000
healthy false

Node: cluster1-02

Ignore
                                                        Speed(Mbps)
Health   Health
Port      IPspace      Broadcast Domain Link MTU  Admin/Oper
Status   Status
--------- ------------ ---------------- ---- ---- -----------
-------- ------
e0a       Cluster      Cluster          up   9000  auto/100000
healthy false
e0d       Cluster      Cluster          up   9000  auto/100000
healthy false
8 entries were displayed.

Node: cluster1-03

   Ignore
                                                        Speed(Mbps)
Health   Health
Port      IPspace      Broadcast Domain Link MTU  Admin/Oper
Status   Status
--------- ------------ ---------------- ---- ---- -----------
-------- ------
e0a       Cluster      Cluster          up   9000  auto/10000
healthy  false
e0b       Cluster      Cluster          up   9000  auto/10000
healthy  false
```

```
Node: cluster1-04

Ignore
                                                          Speed(Mbps)
Health   Health
Port      IPspace      Broadcast Domain Link MTU  Admin/Oper
Status   Status
--------- ------------ ---------------- ---- ---- -----------
-------- ------
e0a       Cluster      Cluster          up   9000  auto/10000
healthy  false
e0b       Cluster      Cluster          up   9000  auto/10000
healthy  false
cluster1::*>
```

b. Verify that all the cluster interfaces (LIFs) are on the home port:

```
network interface show -role Cluster
```

Show example

```
cluster1::*> network interface show -role Cluster
            Logical            Status     Network
Current      Current Is
Vserver     Interface          Admin/Oper Address/Mask      Node
Port    Home
----------- ------------------ ---------- -----------------
------------ ------- ----
Cluster
            cluster1-01_clus1  up/up     169.254.3.4/23
cluster1-01  e0a     true
            cluster1-01_clus2  up/up     169.254.3.5/23
cluster1-01  e0d     true
            cluster1-02_clus1  up/up     169.254.3.8/23
cluster1-02  e0a     true
            cluster1-02_clus2  up/up     169.254.3.9/23
cluster1-02  e0d     true
            cluster1-03_clus1  up/up     169.254.1.3/23
cluster1-03  e0a     true
            cluster1-03_clus2  up/up     169.254.1.1/23
cluster1-03  e0b     true
            cluster1-04_clus1  up/up     169.254.1.6/23
cluster1-04  e0a     true
            cluster1-04_clus2  up/up     169.254.1.7/23
cluster1-04  e0b     true
8 entries were displayed.
cluster1::*>
```

c. Verify that the cluster displays information for both cluster switches:

```
system cluster-switch show -is-monitoring-enabled-operational true
```

Show example

```
cluster1::*> system cluster-switch show -is-monitoring-enabled
-operational true
Switch                      Type               Address
Model
--------------------------- ------------------ ----------------
------------
cs1                         cluster-network    10.233.205.90
N3K-C3132Q-V
     Serial Number: FOCXXXXXXGD
      Is Monitored: true
            Reason: None
  Software Version: Cisco Nexus Operating System (NX-OS)
Software, Version
                    9.3(5)
    Version Source: CDP

cs2                         cluster-network    10.233.205.91
N3K-C3132Q-V
     Serial Number: FOCXXXXXXGS
      Is Monitored: true
            Reason: None
  Software Version: Cisco Nexus Operating System (NX-OS)
Software, Version
                    9.3(5)
    Version Source: CDP
cluster1::*>
```

5. Disable auto-revert on the cluster LIFs. The cluster LIFs fail over to the partner cluster switch and remain there as you perform the upgrade procedure on the targeted switch:

   ```
   network interface modify -vserver Cluster -lif * -auto-revert false
   ```

6. Copy the NX-OS software to the Nexus 3132Q-V switch using one of the following transfer protocols: FTP, TFTP, SFTP, or SCP. For more information on Cisco commands, see the appropriate guide in Cisco Nexus 3000 Series NX-OS Command Reference guides.

Show example

```
cs2# copy sftp: bootflash: vrf management
Enter source filename: /code/nxos.9.3.4.bin
Enter hostname for the sftp server: 172.19.2.1
Enter username: user1

Outbound-ReKey for 172.19.2.1:22
Inbound-ReKey for 172.19.2.1:22
user1@172.19.2.1's password: xxxxxxxx
sftp> progress
Progress meter enabled
sftp> get   /code/nxos.9.3.4.bin  /bootflash/nxos.9.3.4.bin
/code/nxos.9.3.4.bin  100% 1261MB   9.3MB/s   02:15
sftp> exit
Copy complete, now saving to disk (please wait)...
Copy complete.
```

7. Verify the running version of the NX-OS software:

   ```
   show version
   ```

Show example

```
cs2# show version
Cisco Nexus Operating System (NX-OS) Software
TAC support: http://www.cisco.com/tac
Copyright (C) 2002-2020, Cisco and/or its affiliates.
All rights reserved.
The copyrights to certain works contained in this software are
owned by other third parties and used and distributed under their
own
licenses, such as open source.  This software is provided "as is,"
and unless
otherwise stated, there is no warranty, express or implied,
including but not
limited to warranties of merchantability and fitness for a
particular purpose.
Certain components of this software are licensed under
the GNU General Public License (GPL) version 2.0 or
GNU General Public License (GPL) version 3.0  or the GNU
Lesser General Public License (LGPL) Version 2.1 or
Lesser General Public License (LGPL) Version 2.0.
A copy of each such license is available at
http://www.opensource.org/licenses/gpl-2.0.php and
http://opensource.org/licenses/gpl-3.0.html and
http://www.opensource.org/licenses/lgpl-2.1.php and
http://www.gnu.org/licenses/old-licenses/library.txt.

Software
  BIOS: version 04.25
NXOS: version 9.3(3)
  BIOS compile time:  01/28/2020
  NXOS image file is: bootflash:///nxos.9.3.3.bin
                NXOS compile time: 12/22/2019 2:00:00 [12/22/2019
14:00:37]

Hardware
  cisco Nexus 3132QV Chassis (Nexus 9000 Series)
  Intel(R) Core(TM) i3- CPU @ 2.50GHz with 16399900 kB of memory.
  Processor Board ID FOxxxxxxx23

  Device name: cs2
  bootflash:   15137792 kB
  usb1:               0 kB (expansion flash)

Kernel uptime is 79 day(s), 10 hour(s), 23 minute(s), 53 second(s)
```

```
Last reset at 663500 usecs after Mon Nov  2 10:50:33 2020
  Reason: Reset Requested by CLI command reload
  System version: 9.3(3)
  Service:

plugin
  Core Plugin, Ethernet Plugin

Active Package(s):
cs2#
```

8. Install the NX-OS image.

   Installing the image file causes it to be loaded every time the switch is rebooted.

Show example

```
cs2# install all nxos bootflash:nxos.9.3.4.bin
Installer will perform compatibility check first. Please wait.
Installer is forced disruptive

Verifying image bootflash:/nxos.9.3.4.bin for boot variable "nxos".
[] 100% -- SUCCESS

Verifying image type.
[] 100% -- SUCCESS

Preparing "nxos" version info using image bootflash:/nxos.9.3.4.bin.
[] 100% -- SUCCESS

Preparing "bios" version info using image bootflash:/nxos.9.3.4.bin.
[] 100% -- SUCCESS

Performing module support checks.
[] 100% -- SUCCESS

Notifying services about system upgrade.
[] 100% -- SUCCESS


Compatibility check is done:
Module  bootable          Impact              Install-type  Reason
------- ----------------- ------------------- -------------
---------
     1     yes            Disruptive          Reset         Default
upgrade is not hitless


Images will be upgraded according to following table:
Module       Image       Running-Version(pri:alt)
New-Version          Upg-Required
------------ ----------- ----------------------------------------
-------------------- ------------
     1       nxos        9.3(3)
9.3(4)               yes
     1       bios        v04.25(01/28/2020):v04.25(10/18/2016)
v04.25(01/28/2020)   no


Switch will be reloaded for disruptive upgrade.
Do you want to continue with the installation (y/n)?  [n] y
```

```
Install is in progress, please wait.

Performing runtime checks.
[] 100% -- SUCCESS

Setting boot variables.
[] 100% -- SUCCESS

Performing configuration copy.
[] 100% -- SUCCESS

Module 1: Refreshing compact flash and upgrading
bios/loader/bootrom.
Warning: please do not remove or power off the module at this time.
[] 100% -- SUCCESS


Finishing the upgrade, switch will reboot in 10 seconds.
cs2#
```

9. Verify the new version of NX-OS software after the switch has rebooted:

   ```
   show version
   ```

Show example

```
cs2# show version
Cisco Nexus Operating System (NX-OS) Software
TAC support: http://www.cisco.com/tac
Copyright (C) 2002-2020, Cisco and/or its affiliates.
All rights reserved.
The copyrights to certain works contained in this software are
owned by other third parties and used and distributed under their
own
licenses, such as open source.  This software is provided "as is,"
and unless
otherwise stated, there is no warranty, express or implied,
including but not
limited to warranties of merchantability and fitness for a
particular purpose.
Certain components of this software are licensed under
the GNU General Public License (GPL) version 2.0 or
GNU General Public License (GPL) version 3.0  or the GNU
Lesser General Public License (LGPL) Version 2.1 or
Lesser General Public License (LGPL) Version 2.0.
A copy of each such license is available at
http://www.opensource.org/licenses/gpl-2.0.php and
http://opensource.org/licenses/gpl-3.0.html and
http://www.opensource.org/licenses/lgpl-2.1.php and
http://www.gnu.org/licenses/old-licenses/library.txt.

Software
  BIOS: version 04.25
NXOS: version 9.3(4)
  BIOS compile time:  05/22/2019
  NXOS image file is: bootflash:///nxos.9.3.4.bin
  NXOS compile time:  4/28/2020 21:00:00 [04/29/2020 06:28:31]


Hardware
  cisco Nexus 3132QV Chassis (Nexus 9000 Series)
  Intel(R) Core(TM) i3- CPU @ 2.50GHz with 16399900 kB of memory.
  Processor Board ID FOxxxxxxx23

  Device name: cs2
  bootflash:   15137792 kB
  usb1:               0 kB (expansion flash)

Kernel uptime is 79 day(s), 10 hour(s), 23 minute(s), 53 second(s)
```

```
Last reset at 663500 usecs after Mon Nov  2 10:50:33 2020
  Reason: Reset Requested by CLI command reload
  System version: 9.3(4)
  Service:

plugin
  Core Plugin, Ethernet Plugin

Active Package(s):

cs2#
```

10. Verify the health of cluster ports on the cluster.
    a. Verify that cluster ports are up and healthy across all nodes in the cluster:

    ```
    network port show -role cluster
    ```

Show example

```
cluster1::*> network port show -role cluster

Node: cluster1-01

Ignore
                                                  Speed(Mbps)
Health   Health
Port      IPspace      Broadcast Domain Link MTU  Admin/Oper
Status   Status
--------- ------------ ---------------- ---- ---- -----------
-------- ------
e0a       Cluster      Cluster          up   9000  auto/10000
healthy  false
e0b       Cluster      Cluster          up   9000  auto/10000
healthy  false

Node: cluster1-02

Ignore
                                                  Speed(Mbps)
Health   Health
Port      IPspace      Broadcast Domain Link MTU  Admin/Oper
Status   Status
--------- ------------ ---------------- ---- ---- -----------
-------- ------
e0a       Cluster      Cluster          up   9000  auto/10000
healthy  false
e0b       Cluster      Cluster          up   9000  auto/10000
healthy  false

Node: cluster1-03

Ignore
                                                  Speed(Mbps)
Health   Health
Port      IPspace      Broadcast Domain Link MTU  Admin/Oper
Status   Status
--------- ------------ ---------------- ---- ---- -----------
-------- ------
e0a       Cluster      Cluster          up   9000  auto/100000
healthy false
e0d       Cluster      Cluster          up   9000  auto/100000
healthy false
```

```
Node: cluster1-04

Ignore
                                                          Speed(Mbps)
Health   Health
Port      IPspace      Broadcast Domain Link MTU  Admin/Oper
Status   Status
--------- ------------ ---------------- ---- ---- -----------
-------- ------
e0a       Cluster      Cluster          up   9000  auto/100000
healthy false
e0d       Cluster      Cluster          up   9000  auto/100000
healthy false
8 entries were displayed.
```

b. Verify the switch health from the cluster.

```
network device-discovery show -protocol cdp
```

Show example

```
cluster1::*> network device-discovery show -protocol cdp
Node/       Local  Discovered
Protocol    Port   Device (LLDP: ChassisID)  Interface
Platform
----------- ------ ------------------------- -----------------
------------
cluster1-01/cdp
            e0a    cs1                       Ethernet1/7
N3K-C3132Q-V
            e0d    cs2                       Ethernet1/7
N3K-C3132Q-V
cluster01-2/cdp
            e0a    cs1                       Ethernet1/8
N3K-C3132Q-V
            e0d    cs2                       Ethernet1/8
N3K-C3132Q-V
cluster01-3/cdp
            e0a    cs1                       Ethernet1/1/1
N3K-C3132Q-V
            e0b    cs2                       Ethernet1/1/1
N3K-C3132Q-V
cluster1-04/cdp
            e0a    cs1                       Ethernet1/1/2
N3K-C3132Q-V
            e0b    cs2                       Ethernet1/1/2
N3K-C3132Q-V

cluster1::*> system cluster-switch show -is-monitoring-enabled
-operational true
Switch                      Type               Address
Model
--------------------------- ------------------ ----------------
------------
cs1                         cluster-network    10.233.205.90
N3K-C3132Q-V
     Serial Number: FOCXXXXXXGD
      Is Monitored: true
            Reason: None
  Software Version: Cisco Nexus Operating System (NX-OS)
Software, Version
                    9.3(5)
    Version Source: CDP

cs2                         cluster-network    10.233.205.91
```

```
N3K-C3132Q-V
     Serial Number: FOCXXXXXXGS
      Is Monitored: true
            Reason: None
  Software Version: Cisco Nexus Operating System (NX-OS)
Software, Version
                    9.3(5)
    Version Source: CDP

2 entries were displayed.
```

You might observe the following output on the cs1 switch console depending on the RCF version previously loaded on the switch:

```
2020 Nov 17 16:07:18 cs1 %$ VDC-1 %$ %STP-2-UNBLOCK_CONSIST_PORT:
Unblocking port port-channel1 on VLAN0092. Port consistency
restored.
2020 Nov 17 16:07:23 cs1 %$ VDC-1 %$ %STP-2-BLOCK_PVID_PEER:
Blocking port-channel1 on VLAN0001. Inconsistent peer vlan.
2020 Nov 17 16:07:23 cs1 %$ VDC-1 %$ %STP-2-BLOCK_PVID_LOCAL:
Blocking port-channel1 on VLAN0092. Inconsistent local vlan.
```

11. Verify that the cluster is healthy:

    `cluster show`

    Show example

    ```
    cluster1::*> cluster show
    Node                 Health   Eligibility   Epsilon
    -------------------- -------- ------------- -------
    cluster1-01          true     true          false
    cluster1-02          true     true          false
    cluster1-03          true     true          true
    cluster1-04          true     true          false
    4 entries were displayed.
    cluster1::*>
    ```

12. Repeat steps 6 to 11 on switch cs1.
13. Enable auto-revert on the cluster LIFs.

    `network interface modify -vserver Cluster -lif * -auto-revert true`

14. Verify that the cluster LIFs have reverted to their home port:

```
network interface show -role cluster
```

Show example

```
cluster1::*> network interface show -role cluster
            Logical            Status     Network            Current
Current Is
Vserver     Interface          Admin/Oper Address/Mask       Node
Port    Home
----------- ------------------ ---------- ------------------
------------------- ------- ----
Cluster
            cluster1-01_clus1  up/up      169.254.3.4/23
cluster1-01         e0d     true
            cluster1-01_clus2  up/up      169.254.3.5/23
cluster1-01         e0d     true
            cluster1-02_clus1  up/up      169.254.3.8/23
cluster1-02         e0d     true
            cluster1-02_clus2  up/up      169.254.3.9/23
cluster1-02         e0d     true
            cluster1-03_clus1  up/up      169.254.1.3/23
cluster1-03         e0b     true
            cluster1-03_clus2  up/up      169.254.1.1/23
cluster1-03         e0b     true
            cluster1-04_clus1  up/up      169.254.1.6/23
cluster1-04         e0b     true
            cluster1-04_clus2  up/up      169.254.1.7/23
cluster1-04         e0b     true
8 entries were displayed.
cluster1::*>
```

If any cluster LIFs have not returned to their home ports, revert them manually from the local node:

```
network interface revert -vserver Cluster -lif <lif_name>
```

What's next?

After you've installed the NX-OS software, you can install or upgrade the Reference Configuration File (RCF).

Install or upgrade the RCF

Install or upgrade the Reference Configuration File (RCF) overview

You install the Reference Configuration File (RCF) after setting up the Nexus 3132Q-V switches for the first time. You upgrade your RCF version when you have an existing

version of the RCF file installed on your switch.

See the Knowledge Base article How to clear configuration on a Cisco interconnect switch while retaining remote connectivity for further information when installing or upgrading your RCF.

Available RCF configurations

The following table describes the RCFs available for different configurations. Choose the RCF applicable to your configuration.

For specific port and VLAN usage details, refer to the banner and important notes section in your RCF.

RCF name	Description
2-Cluster-HA-Breakout	Supports two ONTAP clusters with at least eight nodes, including nodes that use shared Cluster+HA ports.
4-Cluster-HA-Breakout	Supports four ONTAP clusters with at least four nodes, including nodes that use shared Cluster+HA ports.
1-Cluster-HA	All ports are configured for 40/100GbE. Supports shared cluster/HA traffic on ports. Required for AFF A320, AFF A250, and FAS500f systems. Additionally, all ports can be used as dedicated cluster ports.
1-Cluster-HA-Breakout	Ports are configured for 4x10GbE breakout, 4x25GbE breakout (RCF 1.6+ on 100GbE switches), and 40/100GbE. Supports shared cluster/HA traffic on ports for nodes that use shared cluster/HA ports: AFF A320, AFF A250, and FAS500f systems. Additionally, all ports can be used as dedicated cluster ports.
Cluster-HA-Storage	Ports are configured for 40/100GbE for Cluster+HA, 4x10GbE breakout for Cluster and 4x25GbE breakout for Cluster+HA, and 100GbE for each Storage HA Pair.
Cluster	Two flavors of RCF with different allocations of 4x10GbE ports (breakout) and 40/100GbE ports. All FAS/AFF nodes are supported, except for AFF A320, AFF A250, and FAS500f systems.
Storage	All ports are configured for 100GbE NVMe storage connections.

Available RCFs

The following table lists the available RCFs for 3132Q-V switches. Choose the applicable RCF version for your configuration. See Cisco Ethernet Switches for more information.

RCF name
Cluster-HA-Breakout RCF v1.*xx*
Cluster-HA RCF v1.*xx*

RCF name
Cluster RCF 1.*xx*

Suggested documentation

- Cisco Ethernet Switches (NSS)

  Consult the switch compatibility table for the supported ONTAP and RCF versions on the NetApp Support Site. Note that there can be command dependencies between the command syntax in the RCF and the syntax found in specific versions of NX-OS.

- Cisco Nexus 3000 Series Switches

  Refer to the appropriate software and upgrade guides available on the Cisco website for complete documentation on the Cisco switch upgrade and downgrade procedures.

About the examples

The examples in this procedure use the following switch and node nomenclature:

- The names of the two Cisco switches are **cs1** and **cs2**.
- The node names are **cluster1-01**, **cluster1-02**, **cluster1-03**, and **cluster1-04**.
- The cluster LIF names are **cluster1-01_clus1**, **cluster1-01_clus2**, **cluster1-02_clus1**, **cluster1-02_clus2**, **cluster1-03_clus1**, **cluster1-03_clus2**, **cluster1-04_clus1**, and **cluster1-04_clus2**.
- The `cluster1::*>` prompt indicates the name of the cluster.

The examples in this procedure use four nodes. These nodes use two 10GbE cluster interconnect ports **e0a** and **e0b**. See the Hardware Universe to verify the correct cluster ports on your platforms.

The command outputs might vary depending on different releases of ONTAP.

For details of the available RCF configurations, see Software install workflow.

Commands used

The procedure requires the use of both ONTAP commands and Cisco Nexus 3000 Series Switches commands; ONTAP commands are used unless otherwise indicated.

What's next?

After you've reviewed the install RCF or upgrade RCF procedure, you install the RCF or upgrade your RCF as required.

Install the Reference Configuration File (RCF)

You install the Reference Configuration File (RCF) after setting up the Nexus 3132Q-V switches for the first time.

Before you begin

Verify the following installations and connections:

- A current backup of the switch configuration.

- A fully functioning cluster (no errors in the logs or similar issues).
- The current RCF.
- A console connection to the switch, required when installing the RCF.

About this task

The procedure requires the use of both ONTAP commands and Cisco Nexus 3000 Series Switches commands; ONTAP commands are used unless otherwise indicated.

No operational inter-switch link (ISL) is needed during this procedure. This is by design because RCF version changes can affect ISL connectivity temporarily. To enable non-disruptive cluster operations, the following procedure migrates all of the cluster LIFs to the operational partner switch while performing the steps on the target switch.

Step 1: Install the RCF on the switches

1. Display the cluster ports on each node that are connected to the cluster switches:

   ```
   network device-discovery show
   ```

Show example

```
cluster1::*> network device-discovery show
Node/       Local  Discovered
Protocol    Port   Device (LLDP: ChassisID)  Interface
Platform
----------- ------ ------------------------- ----------------
------------
cluster1-01/cdp
            e0a    cs1                       Ethernet1/7       N3K-
C3132Q-V
            e0d    cs2                       Ethernet1/7       N3K-
C3132Q-V
cluster1-02/cdp
            e0a    cs1                       Ethernet1/8       N3K-
C3132Q-V
            e0d    cs2                       Ethernet1/8       N3K-
C3132Q-V
cluster1-03/cdp
            e0a    cs1                       Ethernet1/1/1     N3K-
C3132Q-V
            e0b    cs2                       Ethernet1/1/1     N3K-
C3132Q-V
cluster1-04/cdp
            e0a    cs1                       Ethernet1/1/2     N3K-
C3132Q-V
            e0b    cs2                       Ethernet1/1/2     N3K-
C3132Q-V
cluster1::*>
```

2. Check the administrative and operational status of each cluster port.

   a. Verify that all the cluster ports are up with a healthy status:

      `network port show -ipspace Cluster`

Show example

```
cluster1::*> network port show -ipspace Cluster
Node: cluster1-01

Ignore
                                                  Speed(Mbps)
Health   Health
Port      IPspace      Broadcast Domain Link MTU  Admin/Oper
Status   Status
--------- ------------ ---------------- ---- ---- -----------
-------- ------
e0a       Cluster      Cluster          up   9000  auto/100000
healthy false
e0d       Cluster      Cluster          up   9000  auto/100000
healthy false
Node: cluster1-02

Ignore
                                                  Speed(Mbps)
Health   Health
Port      IPspace      Broadcast Domain Link MTU  Admin/Oper
Status   Status
--------- ------------ ---------------- ---- ---- -----------
-------- ------
e0a       Cluster      Cluster          up   9000  auto/100000
healthy false
e0d       Cluster      Cluster          up   9000  auto/100000
healthy false
8 entries were displayed.
Node: cluster1-03
   Ignore
                                                  Speed(Mbps)
Health   Health
Port      IPspace      Broadcast Domain Link MTU  Admin/Oper
Status   Status
--------- ------------ ---------------- ---- ---- -----------
-------- ------
e0a       Cluster      Cluster          up   9000  auto/10000
healthy  false
e0b       Cluster      Cluster          up   9000  auto/10000
healthy  false
Node: cluster1-04

Ignore
                                                  Speed(Mbps)
```

```
Health   Health
Port      IPspace      Broadcast Domain Link MTU  Admin/Oper
Status   Status
--------- ------------ ---------------- ---- ---- -----------
-------- ------
e0a       Cluster      Cluster          up   9000  auto/10000
healthy  false
e0b       Cluster      Cluster          up   9000  auto/10000
healthy  false
cluster1::*>
```

b. Verify that all the cluster interfaces (LIFs) are on the home port:

`network interface show -vserver Cluster`

Show example

```
cluster1::*> network interface show -vserver Cluster
            Logical            Status     Network
Current      Current Is
Vserver     Interface          Admin/Oper Address/Mask      Node
Port    Home
----------- ------------------ ---------- -----------------
------------ ------- ----
Cluster
            cluster1-01_clus1  up/up     169.254.3.4/23
cluster1-01  e0a     true
            cluster1-01_clus2  up/up     169.254.3.5/23
cluster1-01  e0d     true
            cluster1-02_clus1  up/up     169.254.3.8/23
cluster1-02  e0a     true
            cluster1-02_clus2  up/up     169.254.3.9/23
cluster1-02  e0d     true
            cluster1-03_clus1  up/up     169.254.1.3/23
cluster1-03  e0a     true
            cluster1-03_clus2  up/up     169.254.1.1/23
cluster1-03  e0b     true
            cluster1-04_clus1  up/up     169.254.1.6/23
cluster1-04  e0a     true
            cluster1-04_clus2  up/up     169.254.1.7/23
cluster1-04  e0b     true
cluster1::*>
```

c. Verify that the cluster displays information for both cluster switches:

```
system cluster-switch show -is-monitoring-enabled-operational true
```

Show example

```
cluster1::*> system cluster-switch show -is-monitoring-enabled
-operational true
Switch                      Type               Address
Model
--------------------------- ------------------ ----------------
---------------
cs1                         cluster-network    10.0.0.1
NX3132QV
     Serial Number: FOXXXXXXXGS
      Is Monitored: true
            Reason: None
  Software Version: Cisco Nexus Operating System (NX-OS)
Software, Version
                    9.3(4)
    Version Source: CDP
cs2                         cluster-network    10.0.0.2
NX3132QV
     Serial Number: FOXXXXXXXGD
      Is Monitored: true
            Reason: None
  Software Version: Cisco Nexus Operating System (NX-OS)
Software, Version
                    9.3(4)
    Version Source: CDP
2 entries were displayed.
```

For ONTAP 9.8 and later, use the command `system switch ethernet show -is-monitoring-enabled-operational true`.

3. Disable auto-revert on the cluster LIFs.

```
cluster1::*> network interface modify -vserver Cluster -lif * -auto
-revert false
```

Make sure that auto-revert is disabled after running this command.

4. On cluster switch cs2, shut down the ports connected to the cluster ports of the nodes.

```
cs2> enable
cs2# configure
cs2(config)# interface eth1/1/1-2,eth1/7-8
cs2(config-if-range)# shutdown
cs2(config-if-range)# exit
cs2# exit
```

The number of ports displayed varies based on the number of nodes in the cluster.

5. Verify that the cluster ports have failed over to the ports hosted on cluster switch cs1. This might take a few seconds.

   `network interface show -vserver Cluster`

   Show example

```
cluster1::*> network interface show -vserver Cluster
            Logical           Status     Network            Current
Current Is
Vserver     Interface         Admin/Oper Address/Mask       Node
Port    Home
----------- ----------------- ---------- ------------------
------------ ------- ----
Cluster
            cluster1-01_clus1 up/up      169.254.3.4/23
cluster1-01   e0a     true
            cluster1-01_clus2 up/up      169.254.3.5/23
cluster1-01   e0a     false
            cluster1-02_clus1 up/up      169.254.3.8/23
cluster1-02   e0a     true
            cluster1-02_clus2 up/up      169.254.3.9/23
cluster1-02   e0a     false
            cluster1-03_clus1 up/up      169.254.1.3/23
cluster1-03   e0a     true
            cluster1-03_clus2 up/up      169.254.1.1/23
cluster1-03   e0a     false
            cluster1-04_clus1 up/up      169.254.1.6/23
cluster1-04   e0a     true
            cluster1-04_clus2 up/up      169.254.1.7/23
cluster1-04   e0a     false
cluster1::*>
```

6. Verify that the cluster is healthy:

```
cluster show
```

Show example

```
cluster1::*> cluster show
Node                  Health  Eligibility   Epsilon
--------------------- ------- ------------  -------
cluster1-01           true    true          false
cluster1-02           true    true          false
cluster1-03           true    true          true
cluster1-04           true    true          false
cluster1::*>
```

7. If you have not already done so, save a copy of the current switch configuration by copying the output of the following command to a text file:

```
show running-config
```

8. Record any custom additions between the current running-config and the RCF file in use.

> Make sure to configure the following:
> * Username and password
> * Management IP address
> * Default gateway
> * Switch name

9. Save basic configuration details to the `write_erase.cfg` file on the bootflash.

> When upgrading or applying a new RCF, you must erase the switch settings and perform basic configuration. You must be connected to the switch serial console port to set up the switch again.

```
cs2# show run | section "switchname" > bootflash:write_erase.cfg

cs2# show run | section "hostname" >> bootflash:write_erase.cfg

cs2# show run | i "username admin password" >> bootflash:write_erase.cfg

cs2# show run | section "vrf context management" >> bootflash:write_erase.cfg

cs2# show run | section "interface mgmt0" >> bootflash:write_erase.cfg
```

10. When installing RCF version 1.12 and later, run the following commands:

```
cs2# echo "hardware access-list tcam region vpc-convergence 256" >>
bootflash:write_erase.cfg

cs2# echo "hardware access-list tcam region racl 256" >>
```

```
bootflash:write_erase.cfg

cs2# echo "hardware access-list tcam region e-racl 256" >>
bootflash:write_erase.cfg

cs2# echo "hardware access-list tcam region qos 256" >>
bootflash:write_erase.cfg
```

See the Knowledge Base article How to clear configuration on a Cisco interconnect switch while retaining remote connectivity for further details.

11. Verify that the `write_erase.cfg` file is populated as expected:

    `show file bootflash:write_erase.cfg`

12. Issue the `write erase` command to erase the current saved configuration:

    ```
    cs2# write erase

    Warning: This command will erase the startup-configuration.

    Do you wish to proceed anyway? (y/n) [n] y
    ```

13. Copy the previously saved basic configuration into the startup configuration.

    ```
    cs2# copy bootflash:write_erase.cfg startup-config
    ```

14. Reboot the switch:

    ```
    cs2# reload

    This command will reboot the system. (y/n)? [n] y
    ```

15. Repeat Steps 7 to 14 on switch cs1.
16. Connect the cluster ports of all nodes in the ONTAP cluster to switches cs1 and cs2.

Step 2: Verify the switch connections

1. Verify that the switch ports connected to the cluster ports are **up**.

    ```
    show interface brief | grep up
    ```

Show example

```
cs1# show interface brief | grep up
.
.
Eth1/1/1      1       eth  access up      none
10G(D) --
Eth1/1/2      1       eth  access up      none
10G(D) --
Eth1/7        1       eth  trunk  up      none
100G(D) --
Eth1/8        1       eth  trunk  up      none
100G(D) --
.
.
```

2. Verify that the ISL between cs1 and cs2 is functional:

   `show port-channel summary`

Show example

```
cs1# show port-channel summary
Flags:  D - Down         P - Up in port-channel (members)
        I - Individual   H - Hot-standby (LACP only)
        s - Suspended    r - Module-removed
        b - BFD Session Wait
        S - Switched     R - Routed
        U - Up (port-channel)
        p - Up in delay-lacp mode (member)
        M - Not in use. Min-links not met
--------------------------------------------------------------------------
------------
Group Port-       Type     Protocol  Member Ports
      Channel
--------------------------------------------------------------------------
------------
1     Po1(SU)     Eth      LACP      Eth1/31(P)   Eth1/32(P)
cs1#
```

3. Verify that the cluster LIFs have reverted to their home port:

   `network interface show -vserver Cluster`

Show example

```
cluster1::*> network interface show -vserver Cluster
            Logical            Status     Network            Current
Current Is
Vserver     Interface          Admin/Oper Address/Mask       Node
Port    Home
----------- ------------------ ---------- ------------------
------------------- ------- ----
Cluster
            cluster1-01_clus1  up/up      169.254.3.4/23
cluster1-01         e0d     true
            cluster1-01_clus2  up/up      169.254.3.5/23
cluster1-01         e0d     true
            cluster1-02_clus1  up/up      169.254.3.8/23
cluster1-02         e0d     true
            cluster1-02_clus2  up/up      169.254.3.9/23
cluster1-02         e0d     true
            cluster1-03_clus1  up/up      169.254.1.3/23
cluster1-03         e0b     true
            cluster1-03_clus2  up/up      169.254.1.1/23
cluster1-03         e0b     true
            cluster1-04_clus1  up/up      169.254.1.6/23
cluster1-04         e0b     true
            cluster1-04_clus2  up/up      169.254.1.7/23
cluster1-04         e0b     true
cluster1::*>
```

4. Verify that the cluster is healthy:

   `cluster show`

Show example

```
cluster1::*> cluster show
Node                 Health  Eligibility   Epsilon
-------------------- ------- ------------- -------
cluster1-01          true    true          false
cluster1-02          true    true          false
cluster1-03          true    true          true
cluster1-04          true    true          false
cluster1::*>
```

Step 3: Setup your ONTAP cluster

NetApp recommends that you use System Manager to set up new clusters.

System Manager provides a simple and easy workflow for cluster set up and configuration including assigning a node management IP address, initializing the cluster, creating a local tier, configuring protocols, and provisioning initial storage.

Refer to Configure ONTAP on a new cluster with System Manager for setup instructions.

What's next?

After you've installed the RCF, you can verify the SSH configuration.

Upgrade your Reference Configuration File (RCF)

You upgrade your RCF version when you have an existing version of the RCF file installed on your operational switches.

Before you begin

Make sure you have the following:

- A current backup of the switch configuration.
- A fully functioning cluster (no errors in the logs or similar issues).
- The current RCF.
- If you are updating your RCF version, you need a boot configuration in the RCF that reflects the desired boot images.

  If you need to change the boot configuration to reflect the current boot images, you must do so before reapplying the RCF so that the correct version is instantiated on future reboots.

No operational inter-switch link (ISL) is needed during this procedure. This is by design because RCF version changes can affect ISL connectivity temporarily. To ensure non-disruptive cluster operations, the following procedure migrates all of the cluster LIFs to the operational partner switch while performing the steps on the target switch.

Before installing a new switch software version and RCFs, you must erase the switch settings and perform basic configuration. You must be connected to the switch using the serial console or have preserved basic configuration information prior to erasing the switch settings.

Step 1: Prepare for the upgrade

1. Display the cluster ports on each node that are connected to the cluster switches:

   ```
   network device-discovery show
   ```

Show example

```
cluster1::*> network device-discovery show
Node/       Local  Discovered
Protocol    Port   Device (LLDP: ChassisID)  Interface
Platform
----------- ------ ------------------------- ----------------
------------
cluster1-01/cdp
            e0a    cs1                       Ethernet1/7       N3K-
C3132Q-V
            e0d    cs2                       Ethernet1/7       N3K-
C3132Q-V
cluster1-02/cdp
            e0a    cs1                       Ethernet1/8       N3K-
C3132Q-V
            e0d    cs2                       Ethernet1/8       N3K-
C3132Q-V
cluster1-03/cdp
            e0a    cs1                       Ethernet1/1/1     N3K-
C3132Q-V
            e0b    cs2                       Ethernet1/1/1     N3K-
C3132Q-V
cluster1-04/cdp
            e0a    cs1                       Ethernet1/1/2     N3K-
C3132Q-V
            e0b    cs2                       Ethernet1/1/2     N3K-
C3132Q-V
cluster1::*>
```

2. Check the administrative and operational status of each cluster port.

   a. Verify that all the cluster ports are up with a healthy status:

      `network port show -ipspace Cluster`

Show example

```
cluster1::*> network port show -ipspace Cluster

Node: cluster1-01

Ignore
                                                  Speed(Mbps)
Health   Health
Port      IPspace      Broadcast Domain Link MTU  Admin/Oper
Status   Status
--------- ------------ ---------------- ---- ---- -----------
-------- ------
e0a       Cluster      Cluster          up   9000  auto/100000
healthy false
e0d       Cluster      Cluster          up   9000  auto/100000
healthy false

Node: cluster1-02

Ignore
                                                  Speed(Mbps)
Health   Health
Port      IPspace      Broadcast Domain Link MTU  Admin/Oper
Status   Status
--------- ------------ ---------------- ---- ---- -----------
-------- ------
e0a       Cluster      Cluster          up   9000  auto/100000
healthy false
e0d       Cluster      Cluster          up   9000  auto/100000
healthy false
8 entries were displayed.

Node: cluster1-03

   Ignore
                                                  Speed(Mbps)
Health   Health
Port      IPspace      Broadcast Domain Link MTU  Admin/Oper
Status   Status
--------- ------------ ---------------- ---- ---- -----------
-------- ------
e0a       Cluster      Cluster          up   9000  auto/10000
healthy  false
e0b       Cluster      Cluster          up   9000  auto/10000
healthy  false
```

```
Node: cluster1-04

Ignore
                                                          Speed(Mbps)
Health   Health
Port      IPspace      Broadcast Domain Link MTU  Admin/Oper
Status   Status
--------- ------------ ---------------- ---- ---- -----------
-------- ------
e0a       Cluster      Cluster          up   9000  auto/10000
healthy  false
e0b       Cluster      Cluster          up   9000  auto/10000
healthy  false
cluster1::*>
```

b. Verify that all the cluster interfaces (LIFs) are on the home port:

```
network interface show -vserver Cluster
```

Show example

```
cluster1::*> network interface show -vserver Cluster
            Logical            Status     Network
Current      Current Is
Vserver     Interface          Admin/Oper Address/Mask      Node
Port    Home
----------- ------------------ ---------- -----------------
------------ ------- ----
Cluster
            cluster1-01_clus1  up/up     169.254.3.4/23
cluster1-01  e0a     true
            cluster1-01_clus2  up/up     169.254.3.5/23
cluster1-01  e0d     true
            cluster1-02_clus1  up/up     169.254.3.8/23
cluster1-02  e0a     true
            cluster1-02_clus2  up/up     169.254.3.9/23
cluster1-02  e0d     true
            cluster1-03_clus1  up/up     169.254.1.3/23
cluster1-03  e0a     true
            cluster1-03_clus2  up/up     169.254.1.1/23
cluster1-03  e0b     true
            cluster1-04_clus1  up/up     169.254.1.6/23
cluster1-04  e0a     true
            cluster1-04_clus2  up/up     169.254.1.7/23
cluster1-04  e0b     true
cluster1::*>
```

c. Verify that the cluster displays information for both cluster switches:

```
system cluster-switch show -is-monitoring-enabled-operational true
```

Show example

```
cluster1::*> system cluster-switch show -is-monitoring-enabled
-operational true
Switch                        Type               Address
Model
---------------------------- ------------------ ----------------
---------------
cs1                           cluster-network    10.0.0.1
NX3132QV
     Serial Number: FOXXXXXXXGS
      Is Monitored: true
            Reason: None
  Software Version: Cisco Nexus Operating System (NX-OS)
Software, Version
                    9.3(4)
    Version Source: CDP

cs2                           cluster-network    10.0.0.2
NX3132QV
     Serial Number: FOXXXXXXXGD
      Is Monitored: true
            Reason: None
  Software Version: Cisco Nexus Operating System (NX-OS)
Software, Version
                    9.3(4)
    Version Source: CDP

2 entries were displayed.
```

For ONTAP 9.8 and later, use the command `system switch ethernet show -is-monitoring-enabled-operational true`.

3. Disable auto-revert on the cluster LIFs.

```
cluster1::*> network interface modify -vserver Cluster -lif * -auto
-revert false
```

Make sure that auto-revert is disabled after running this command.

Step 2: Configure ports

1. On cluster switch cs2, shut down the ports connected to the cluster ports of the nodes.

```
cs2> enable
cs2# configure
cs2(config)# interface eth1/1/1-2,eth1/7-8
cs2(config-if-range)# shutdown
cs2(config-if-range)# exit
cs2# exit
```

The number of ports displayed varies based on the number of nodes in the cluster.

2. Verify that the cluster ports have failed over to the ports hosted on cluster switch cs1. This might take a few seconds.

   `network interface show -vserver Cluster`

   Show example

```
cluster1::*> network interface show -vserver Cluster
            Logical           Status     Network            Current
Current Is
Vserver     Interface         Admin/Oper Address/Mask       Node
Port    Home
----------- ----------------- ---------- ------------------
------------ ------- ----
Cluster
            cluster1-01_clus1 up/up      169.254.3.4/23
cluster1-01   e0a     true
            cluster1-01_clus2 up/up      169.254.3.5/23
cluster1-01   e0a     false
            cluster1-02_clus1 up/up      169.254.3.8/23
cluster1-02   e0a     true
            cluster1-02_clus2 up/up      169.254.3.9/23
cluster1-02   e0a     false
            cluster1-03_clus1 up/up      169.254.1.3/23
cluster1-03   e0a     true
            cluster1-03_clus2 up/up      169.254.1.1/23
cluster1-03   e0a     false
            cluster1-04_clus1 up/up      169.254.1.6/23
cluster1-04   e0a     true
            cluster1-04_clus2 up/up      169.254.1.7/23
cluster1-04   e0a     false
cluster1::*>
```

3. Verify that the cluster is healthy:

```
cluster show
```

Show example

```
cluster1::*> cluster show
Node                  Health  Eligibility   Epsilon
--------------------- ------- ------------  -------
cluster1-01           true    true          false
cluster1-02           true    true          false
cluster1-03           true    true          true
cluster1-04           true    true          false
cluster1::*>
```

4. If you have not already done so, save a copy of the current switch configuration by copying the output of the following command to a text file:

```
show running-config
```

5. Record any custom additions between the current running-config and the RCF file in use.

Make sure to configure the following:

- Username and password
- Management IP address
- Default gateway
- Switch name

6. Save basic configuration details to the `write_erase.cfg` file on the bootflash.

When upgrading or applying a new RCF, you must erase the switch settings and perform basic configuration.

```
cs2# show run | section "switchname" > bootflash:write_erase.cfg

cs2# show run | section "hostname" >> bootflash:write_erase.cfg

cs2# show run | i "username admin password" >> bootflash:write_erase.cfg

cs2# show run | section "vrf context management" >> bootflash:write_erase.cfg

cs2# show run | section "interface mgmt0" >> bootflash:write_erase.cfg
```

7. When upgrading to RCF version 1.12 and later, run the following commands:

```
cs2# echo "hardware access-list tcam region vpc-convergence 256" >>
bootflash:write_erase.cfg
```

```
cs2# echo "hardware access-list tcam region racl 256" >>
bootflash:write_erase.cfg

cs2# echo "hardware access-list tcam region e-racl 256" >>
bootflash:write_erase.cfg

cs2# echo "hardware access-list tcam region qos 256" >>
bootflash:write_erase.cfg
```

8. Verify that the `write_erase.cfg` file is populated as expected:

   `show file bootflash:write_erase.cfg`

9. Issue the `write erase` command to erase the current saved configuration:

   ```
   cs2# write erase

   Warning: This command will erase the startup-configuration.

   Do you wish to proceed anyway? (y/n) [n] y
   ```

10. Copy the previously saved basic configuration into the startup configuration.

    `cs2# copy bootflash:write_erase.cfg startup-config`

11. Reboot the switch:

    ```
    cs2# reload

    This command will reboot the system. (y/n)? [n] y
    ```

12. After the management IP address is reachable again, log in to the switch through SSH.

    You may need to update host file entries related to the SSH keys.

13. Copy the RCF to the bootflash of switch cs2 using one of the following transfer protocols: FTP, TFTP, SFTP, or SCP. For more information on Cisco commands, see the appropriate guide in the Cisco Nexus 3000 Series NX-OS Command Reference guides.

    Show example

    ```
    cs2# copy tftp: bootflash: vrf management
    Enter source filename: Nexus_3132QV_RCF_v1.6-Cluster-HA-Breakout.txt
    Enter hostname for the tftp server: 172.22.201.50
    Trying to connect to tftp server......Connection to Server
    Established.
    TFTP get operation was successful
    Copy complete, now saving to disk (please wait)...
    ```

14. Apply the RCF previously downloaded to the bootflash.

    For more information on Cisco commands, see the appropriate guide in the Cisco Nexus 3000 Series NX-OS Command Reference guides.

    Show example

    ```
    cs2# copy Nexus_3132QV_RCF_v1.6-Cluster-HA-Breakout.txt running-config echo-commands
    ```

    Make sure to read thoroughly the **Installation notes**, **Important Notes**, and **banner** sections of your RCF. You must read and follow these instructions to ensure the proper configuration and operation of the switch.

15. Verify that the RCF file is the correct newer version:

    ```
    show running-config
    ```

    When you check the output to verify you have the correct RCF, make sure that the following information is correct:

    - The RCF banner
    - The node and port settings
    - Customizations

      The output varies according to your site configuration. Check the port settings and refer to the release notes for any changes specific to the RCF that you have installed.

      For steps on how to bring your 10GbE ports online after an upgrade of the RCF, see the Knowledge Base article 10GbE ports on a Cisco 3132Q cluster switch do not come online.

16. After you verify the RCF versions and switch settings are correct, copy the `running-config` file to the `startup-config` file.

    For more information on Cisco commands, see the appropriate guide in the Cisco Nexus 3000 Series NX-OS Command Reference guides.

    Show example

    ```
    cs2# copy running-config startup-config
    [########################################] 100% Copy complete
    ```

17. Reboot switch cs2. You can ignore both the "cluster ports down" events reported on the nodes while the switch reboots and the error `% Invalid command at '^' marker` output.

```
cs2# reload
This command will reboot the system. (y/n)?  [n] y
```

18. Reapply any previous customizations to the switch configuration. Refer to Review cabling and configuration considerations for details of any further changes required.
19. Verify the health of cluster ports on the cluster.
    a. Verify that cluster ports are up and healthy across all nodes in the cluster:

    ```
    network port show -ipspace Cluster
    ```

Show example

```
cluster1::*> network port show -ipspace Cluster

Node: cluster1-01

Ignore
                                                  Speed(Mbps)
Health   Health
Port      IPspace      Broadcast Domain Link MTU  Admin/Oper
Status   Status
--------- ------------ ---------------- ---- ---- -----------
-------- ------
e0a       Cluster      Cluster          up   9000  auto/10000
healthy  false
e0b       Cluster      Cluster          up   9000  auto/10000
healthy  false

Node: cluster1-02

Ignore
                                                  Speed(Mbps)
Health   Health
Port      IPspace      Broadcast Domain Link MTU  Admin/Oper
Status   Status
--------- ------------ ---------------- ---- ---- -----------
-------- ------
e0a       Cluster      Cluster          up   9000  auto/10000
healthy  false
e0b       Cluster      Cluster          up   9000  auto/10000
healthy  false

Node: cluster1-03

Ignore
                                                  Speed(Mbps)
Health   Health
Port      IPspace      Broadcast Domain Link MTU  Admin/Oper
Status   Status
--------- ------------ ---------------- ---- ---- -----------
-------- ------
e0a       Cluster      Cluster          up   9000  auto/100000
healthy false
e0d       Cluster      Cluster          up   9000  auto/100000
healthy false
```

```
Node: cluster1-04

Ignore
                                                          Speed(Mbps)
Health   Health
Port      IPspace      Broadcast Domain Link MTU  Admin/Oper
Status   Status
--------- ------------ ---------------- ---- ---- -----------
-------- ------
e0a       Cluster      Cluster          up   9000  auto/100000
healthy false
e0d       Cluster      Cluster          up   9000  auto/100000
healthy false
```

b. Verify the switch health from the cluster.

```
network device-discovery show -protocol cdp
```

Show example

```
cluster1::*> network device-discovery show -protocol cdp
Node/       Local  Discovered
Protocol    Port   Device (LLDP: ChassisID)  Interface
Platform
----------- ------ ------------------------- -----------------
--------
cluster1-01/cdp
            e0a    cs1                       Ethernet1/7
N3K-C3132Q-V
            e0d    cs2                       Ethernet1/7
N3K-C3132Q-V
cluster01-2/cdp
            e0a    cs1                       Ethernet1/8
N3K-C3132Q-V
            e0d    cs2                       Ethernet1/8
N3K-C3132Q-V
cluster01-3/cdp
            e0a    cs1                       Ethernet1/1/1
N3K-C3132Q-V
            e0b    cs2                       Ethernet1/1/1
N3K-C3132Q-V
cluster1-04/cdp
            e0a    cs1                       Ethernet1/1/2
N3K-C3132Q-V
            e0b    cs2                       Ethernet1/1/2
N3K-C3132Q-V

cluster1::*> system cluster-switch show -is-monitoring-enabled
-operational true
Switch                      Type               Address
Model
--------------------------- ------------------ ----------------
-----
cs1                         cluster-network    10.233.205.90
N3K-C3132Q-V
     Serial Number: FOXXXXXXXGD
      Is Monitored: true
            Reason: None
  Software Version: Cisco Nexus Operating System (NX-OS)
Software, Version
                    9.3(4)
    Version Source: CDP

cs2                         cluster-network    10.233.205.91
```

```
N3K-C3132Q-V
     Serial Number: FOXXXXXXXGS
      Is Monitored: true
            Reason: None
  Software Version: Cisco Nexus Operating System (NX-OS)
Software, Version
                    9.3(4)
    Version Source: CDP

2 entries were displayed.
```

For ONTAP 9.8 and later, use the command `system switch ethernet show -is -monitoring-enabled-operational true`.

You might observe the following output on the cs1 switch console depending on the RCF version previously loaded on the switch:

```
2020 Nov 17 16:07:18 cs1 %$ VDC-1 %$ %STP-2-
UNBLOCK_CONSIST_PORT: Unblocking port port-channel1 on
VLAN0092. Port consistency restored.
2020 Nov 17 16:07:23 cs1 %$ VDC-1 %$ %STP-2-
BLOCK_PVID_PEER: Blocking port-channel1 on VLAN0001.
Inconsistent peer vlan.
2020 Nov 17 16:07:23 cs1 %$ VDC-1 %$ %STP-2-
BLOCK_PVID_LOCAL: Blocking port-channel1 on VLAN0092.
Inconsistent local vlan.
```

It can take up to 5 minutes for the cluster nodes to report as healthy.

20. On cluster switch cs1, shut down the ports connected to the cluster ports of the nodes.

Show example

```
cs1> enable
cs1# configure
cs1(config)# interface eth1/1/1-2,eth1/7-8
cs1(config-if-range)# shutdown
cs1(config-if-range)# exit
cs1# exit
```

The number of ports displayed varies based on the number of nodes in the cluster.

21. Verify that the cluster LIFs have migrated to the ports hosted on switch cs2. This might take a few seconds.

```
network interface show -vserver Cluster
```

Show example

```
cluster1::*> network interface show -vserver Cluster
            Logical             Status     Network             Current
Current Is
Vserver     Interface           Admin/Oper Address/Mask        Node
Port    Home
----------- ------------------ ---------- ------------------
------------------- ------- ----
Cluster
            cluster1-01_clus1  up/up      169.254.3.4/23
cluster1-01         e0d     false
            cluster1-01_clus2  up/up      169.254.3.5/23
cluster1-01         e0d     true
            cluster1-02_clus1  up/up      169.254.3.8/23
cluster1-02         e0d     false
            cluster1-02_clus2  up/up      169.254.3.9/23
cluster1-02         e0d     true
            cluster1-03_clus1  up/up      169.254.1.3/23
cluster1-03         e0b     false
            cluster1-03_clus2  up/up      169.254.1.1/23
cluster1-03         e0b     true
            cluster1-04_clus1  up/up      169.254.1.6/23
cluster1-04         e0b     false
            cluster1-04_clus2  up/up      169.254.1.7/23
cluster1-04         e0b     true
cluster1::*>
```

22. Verify that the cluster is healthy:

```
cluster show
```

Show example

```
cluster1::*> cluster show
Node                  Health   Eligibility   Epsilon
--------------------- -------- ------------- -------
cluster1-01           true     true          false
cluster1-02           true     true          false
cluster1-03           true     true          true
cluster1-04           true     true          false
4 entries were displayed.
cluster1::*>
```

23. Repeat Steps 1 to 19 on switch cs1.
24. Enable auto-revert on the cluster LIFs.

```
cluster1::*> network interface modify -vserver Cluster -lif * -auto
-revert True
```

25. Reboot switch cs1. You do this to trigger the cluster LIFs to revert to their home ports. You can ignore the "cluster ports down" events reported on the nodes while the switch reboots.

```
cs1# reload
This command will reboot the system. (y/n)?  [n] y
```

Step 3: Verify the configuration

1. Verify that the switch ports connected to the cluster ports are up.

```
show interface brief | grep up
```

Show example

```
cs1# show interface brief | grep up
.
.
Eth1/1/1      1       eth  access up      none
10G(D) --
Eth1/1/2      1       eth  access up      none
10G(D) --
Eth1/7        1       eth  trunk  up      none
100G(D) --
Eth1/8        1       eth  trunk  up      none
100G(D) --
.
.
```

2. Verify that the ISL between cs1 and cs2 is functional:

   `show port-channel summary`

Show example

```
cs1# show port-channel summary
Flags:  D - Down        P - Up in port-channel (members)
        I - Individual  H - Hot-standby (LACP only)
        s - Suspended   r - Module-removed
        b - BFD Session Wait
        S - Switched    R - Routed
        U - Up (port-channel)
        p - Up in delay-lacp mode (member)
        M - Not in use. Min-links not met
--------------------------------------------------------------------------
------------
Group Port-       Type     Protocol  Member Ports
      Channel
--------------------------------------------------------------------------
------------
1     Po1(SU)     Eth      LACP      Eth1/31(P)   Eth1/32(P)
cs1#
```

3. Verify that the cluster LIFs have reverted to their home ports:

   `network interface show -vserver Cluster`

Show example

```
cluster1::*> network interface show -vserver Cluster
            Logical            Status     Network            Current
Current Is
Vserver     Interface          Admin/Oper Address/Mask       Node
Port    Home
----------- ------------------ ---------- ------------------
------------------- ------- ----
Cluster
            cluster1-01_clus1  up/up      169.254.3.4/23
cluster1-01         e0d     true
            cluster1-01_clus2  up/up      169.254.3.5/23
cluster1-01         e0d     true
            cluster1-02_clus1  up/up      169.254.3.8/23
cluster1-02         e0d     true
            cluster1-02_clus2  up/up      169.254.3.9/23
cluster1-02         e0d     true
            cluster1-03_clus1  up/up      169.254.1.3/23
cluster1-03         e0b     true
            cluster1-03_clus2  up/up      169.254.1.1/23
cluster1-03         e0b     true
            cluster1-04_clus1  up/up      169.254.1.6/23
cluster1-04         e0b     true
            cluster1-04_clus2  up/up      169.254.1.7/23
cluster1-04         e0b     true
cluster1::*>
```

4. Verify that the cluster is healthy:

```
cluster show
```

Show example

```
cluster1::*> cluster show
Node                 Health  Eligibility   Epsilon
-------------------- ------- ------------- -------
cluster1-01          true    true          false
cluster1-02          true    true          false
cluster1-03          true    true          true
cluster1-04          true    true          false
cluster1::*>
```

5. Verify the connectivity of the remote cluster interfaces:

ONTAP 9.9.1 and later

You can use the `network interface check cluster-connectivity` command to start an accessibility check for cluster connectivity and then display the details:

`network interface check cluster-connectivity start` and `network interface check cluster-connectivity show`

```
cluster1::*> network interface check cluster-connectivity start
```

NOTE: Wait for a number of seconds before running the show command to display the details.

```
cluster1::*> network interface check cluster-connectivity show
                                  Source              Destination
Packet
Node   Date                       LIF                 LIF
Loss
------ -------------------------- ------------------
------------------ -----------
cluster1-01
       3/5/2022 19:21:18 -06:00   cluster1-01_clus2   cluster1-02_clus1
none
       3/5/2022 19:21:20 -06:00   cluster1-01_clus2   cluster1-02_clus2
none

cluster1-02
       3/5/2022 19:21:18 -06:00   cluster1-02_clus2   cluster1-01_clus1
none
       3/5/2022 19:21:20 -06:00   cluster1-02_clus2   cluster1-01_clus2
none
```

All ONTAP releases

For all ONTAP releases, you can also use the `cluster ping-cluster -node <name>` command to check the connectivity:

```
cluster ping-cluster -node <name>
```

```
cluster1::*> cluster ping-cluster -node local
Host is cluster1-02
Getting addresses from network interface table...
Cluster cluster1-01_clus1 169.254.209.69 cluster1-01     e0a
Cluster cluster1-01_clus2 169.254.49.125 cluster1-01     e0b
Cluster cluster1-02_clus1 169.254.47.194 cluster1-02     e0a
Cluster cluster1-02_clus2 169.254.19.183 cluster1-02     e0b
Local = 169.254.47.194 169.254.19.183
Remote = 169.254.209.69 169.254.49.125
Cluster Vserver Id = 4294967293
Ping status: ......
Basic connectivity succeeds on 4 path(s)
Basic connectivity fails on 0 path(s)
................
Detected 9000 byte MTU on 4 path(s):
    Local 169.254.19.183 to Remote 169.254.209.69
    Local 169.254.19.183 to Remote 169.254.49.125
    Local 169.254.47.194 to Remote 169.254.209.69
    Local 169.254.47.194 to Remote 169.254.49.125
Larger than PMTU communication succeeds on 4 path(s)
RPC status:
2 paths up, 0 paths down (tcp check)
2 paths up, 0 paths down (udp check)
```

What's next?

After you've upgraded your RCF, you verify the SSH configuration.

Verify your SSH configuration

If you are using the Ethernet Switch Health Monitor (CSHM) and log collection features, verify that SSH and SSH keys are enabled on the cluster switches.

Steps

1. Verify that SSH is enabled:

```
(switch) show ssh server
ssh version 2 is enabled
```

2. Verify that the SSH keys are enabled:

```
show ssh key
```

Show example

```
(switch)# show ssh key

rsa Keys generated:Fri Jun 28 02:16:00 2024

ssh-rsa
AAAAB3NzaC1yc2EAAAADAQABAAAAgQDiNrD52Q586wTGJjFAbjBlFaA23EpDrZ2sDCew
l7nwlioC6HBejxluIObAH8hrW8kR+gj0ZAfPpNeLGTg3APj/yiPTBoIZZxbWRShywAM5
PqyxWwRb7kp9Zt1YHzVuHYpSO82KUDowKrL6lox/YtpKoZUDZjrZjAp8hTv3JZsPgQ==

bitcount:1024
fingerprint:
SHA256:aHwhpzo7+YCDSrp3isJv2uVGz+mjMMokqdMeXVVXfdo

could not retrieve dsa key information

ecdsa Keys generated:Fri Jun 28 02:30:56 2024

ecdsa-sha2-nistp521
AAAAE2VjZHNhLXNoYTItbmlzdHA1MjEAAAAIbmlzdHA1MjEAAACFBABJ+ZX5SFKhS57e
vkE273e0VoqZi4/32dt+f14fBuKv80MjMsmLfjKtCWy1wgVt1Zi+C5TIBbugpzez529z
kFSF0ADb8JaGCoaAYe2HvWR/f6QLbKbqVIewCdqWgxzrIY5BPP5GBdxQJMBiOwEdnHg1
u/9Pzh/Vz9cHDcCW9qGE780QHA==

bitcount:521
fingerprint:
SHA256:TFGe2hXn6QIpcs/vyHzftHJ7Dceg0vQaULYRAlZeHwQ

(switch)# show feature | include scpServer
scpServer             1          enabled
(switch)# show feature | include ssh
sshServer             1          enabled
(switch)#
```

When enabling FIPS, you must change the bitcount to 256 on the switch using the command `ssh key ecdsa 256 force`. See Configure network security using FIPS for more details.

What's next?

After you've verified your SSH configuration, you can configure switch health monitoring.

Reset the 3132Q-V cluster switch to factory defaults

To reset the 3132Q-V cluster switch to factory defaults, you must erase the 3132Q-V

switch settings.

About this task

- You must be connected to the switch using the serial console.
- This task resets the configuration of the management network.

Steps

1. Erase the existing configuration:

   `write erase`

   ```
   (cs2)# write erase

   Warning: This command will erase the startup-configuration.
   Do you wish to proceed anyway? (y/n) [n] y
   ```

2. Reload the switch software:

   `reload`

   ```
   (cs2)# reload

   This command will reboot the system. (y/n)? [n] y
   ```

   The system reboots and enters the configuration wizard. During the boot, if you receive the prompt “Abort Auto Provisioning and continue with normal setup? (yes/no)[n]”, you should respond **yes** to proceed.

What’s next

After resetting the switch, you can reconfigure it according to your requirements.

Migrate switches

Migrate from switchless clusters to two-node switched clusters

Migrate from switchless clusters to two-node switched clusters workflow

Follow these workflow steps to migrate from a two-node switchless cluster to a two-node switched cluster that includes Cisco Nexus 3132Q-V cluster network switches.

Migration requirements

Review the requirements and example switch information for the migration process.

Prepare for migration

Prepare your switchless clusters for migration to two-node switched clusters.

3 Configure your ports

Configure your ports for migration from two-node switchless clusters to two-node switched clusters.

4 Complete your migration

Complete your migration from switchless clusters to two-node switched clusters.

Migration requirements

If you have a two-node switchless cluster, review this procedure for the applicable requirements to migrate to a two-node switched cluster.

> The procedure requires the use of both ONTAP commands and Cisco Nexus 3000 Series Switches commands; ONTAP commands are used unless otherwise indicated.

For more information, see:

- NetApp CN1601 and CN1610
- Cisco Ethernet Switch
- Hardware Universe

Port and node connections

Make sure you understand the port and node connections and cabling requirements when you migrate to a two-node switched cluster with Cisco Nexus 3132Q-V cluster switches.

- The cluster switches use the Inter-Switch Link (ISL) ports e1/31-32.
- The Hardware Universe contains information about supported cabling to Nexus 3132Q-V switches:
  - The nodes with 10 GbE cluster connections require QSFP optical modules with breakout fiber cables or QSFP to SFP+ copper break-out cables.
  - The nodes with 40 GbE cluster connections require supported QSFP/QSFP28 optical modules with fiber cables or QSFP/QSFP28 copper direct-attach cables.
  - The cluster switches use the appropriate ISL cabling: 2x QSFP28 fiber or copper direct-attach cables.
- On Nexus 3132Q-V, you can operate QSFP ports as either 40 Gb Ethernet or 4x10 Gb Ethernet modes.

  By default, there are 32 ports in the 40 Gb Ethernet mode. These 40 Gb Ethernet ports are numbered in a 2-tuple naming convention. For example, the second 40 Gb Ethernet port is numbered as 1/2. The process of changing the configuration from 40 Gb Ethernet to 10 Gb Ethernet is called *breakout* and the process of changing the configuration from 10 Gb Ethernet to 40 Gb Ethernet is called *breakin*. When you break out a 40 Gb Ethernet port into 10 Gb Ethernet ports, the resulting ports are numbered using a 3-tuple naming convention. For example, the breakout ports of the second 40 Gb Ethernet port are numbered as 1/2/1, 1/2/2, 1/2/3, and 1/2/4.

- On the left side of Nexus 3132Q-V is a set of four SFP+ ports multiplexed to the first QSFP port.

  By default, the RCF is structured to use the first QSFP port.

  You can make four SFP+ ports active instead of a QSFP port for Nexus 3132Q-V by using the `hardware`

`profile front portmode sfp-plus` command. Similarly, you can reset Nexus 3132Q-V to use a QSFP port instead of four SFP+ ports by using the `hardware profile front portmode qsfp` command.

- Make sure you configured some of the ports on Nexus 3132Q-V to run at 10 GbE or 40 GbE.

  You can break-out the first six ports into 4x10 GbE mode by using the `interface breakout module 1 port 1-6 map 10g-4x` command. Similarly, you can regroup the first six QSFP+ ports from breakout configuration by using the `no interface breakout module 1 port 1-6 map 10g-4x` command.

- The number of 10 GbE and 40 GbE ports are defined in the reference configuration files (RCFs) available at Cisco ® Cluster Network Switch Reference Configuration File Download.

Before you begin

- Configurations properly set up and functioning.
- Nodes running ONTAP 9.4 or later.
- All cluster ports in the `up` state.
- The Cisco Nexus 3132Q-V cluster switch is supported.
- The existing cluster network configuration has:
  - The Nexus 3132 cluster infrastructure that is redundant and fully functional on both switches.
  - The latest RCF and NX-OS versions on your switches.

    Cisco Ethernet Switches has information about the ONTAP and NX-OS versions supported in this procedure.

  - Management connectivity on both switches.
  - Console access to both switches.
  - All cluster logical interfaces (LIFs) in the `up` state without being migrated.
  - Initial customization of the switch.
  - All the ISL ports enabled and cabled.

In addition, you must plan, migrate, and read the required documentation on 10 GbE and 40 GbE connectivity from nodes to Nexus 3132Q-V cluster switches.

About the examples used

The examples in this procedure use the following switch and node nomenclature:

- Nexus 3132Q-V cluster switches, C1 and C2.
- The nodes are n1 and n2.

> The examples in this procedure use two nodes, each using two 40 GbE cluster interconnect ports **e4a** and **e4e**. The Hardware Universe has details about the cluster ports on your platforms.

This procedure covers the following scenarios:

- **n1_clus1** is the first cluster logical interface (LIF) to be connected to cluster switch C1 for node **n1**.
- **n1_clus2** is the first cluster LIF to be connected to cluster switch C2 for node **n1**.

- **n2_clus1** is the first cluster LIF to be connected to cluster switch C1 for node **n2**.
- **n2_clus2** is the second cluster LIF to be connected to cluster switch C2 for node **n2**.
- The number of 10 GbE and 40 GbE ports are defined in the reference configuration files (RCFs) available at Cisco ® Cluster Network Switch Reference Configuration File Download.

The procedure requires the use of both ONTAP commands and Cisco Nexus 3000 Series Switches commands; ONTAP commands are used unless otherwise indicated.

- The cluster starts with two nodes connected and functioning in a two-node switchless cluster setting.
- The first cluster port is moved to C1.
- The second cluster port is moved to C2.
- The two-node switchless cluster option is disabled.

What's next?

After you've reviewed the migration requirements, you can prepare to migrate your switches.

Prepare for migration from switchless clusters to switched clusters

Follow these steps to prepare your switchless cluster for migration to a two-node switched cluster.

Steps

1. If AutoSupport is enabled on this cluster, suppress automatic case creation by invoking an AutoSupport message:

   ```
   system node autosupport invoke -node * -type all - message MAINT=xh
   ```

   x is the duration of the maintenance window in hours.

   The AutoSupport message notifies technical support of this maintenance task so that automatic case creation is suppressed during the maintenance window.

2. Determine the administrative or operational status for each cluster interface:
   a. Display the network port attributes:

      ```
      network port show
      ```

Show example

```
cluster::*> network port show -role cluster
  (network port show)
Node: n1

Ignore
                                                  Speed(Mbps)
Health   Health
Port      IPspace      Broadcast Domain Link MTU  Admin/Oper
Status   Status
--------- ------------ ---------------- ---- ---- -----------
-------- ------
e4a       Cluster      Cluster          up   9000 auto/40000  -
-
e4e       Cluster      Cluster          up   9000 auto/40000  -
-

Node: n2

Ignore
                                                  Speed(Mbps)
Health   Health
Port      IPspace      Broadcast Domain Link MTU  Admin/Oper
Status   Status
--------- ------------ ---------------- ---- ---- -----------
-------- ------
e4a       Cluster      Cluster          up   9000 auto/40000  -
-
e4e       Cluster      Cluster          up   9000 auto/40000  -
-
4 entries were displayed.
```

b. Display information about the logical interfaces:

```
network interface show
```

Show example

```
cluster::*> network interface show -role cluster
 (network interface show)
            Logical    Status     Network            Current
Current Is
Vserver     Interface  Admin/Oper Address/Mask       Node
Port    Home
----------- ---------- ---------- ------------------
------------ ------- ----
Cluster
            n1_clus1   up/up      10.10.0.1/24       n1
e4a     true
            n1_clus2   up/up      10.10.0.2/24       n1
e4e     true
            n2_clus1   up/up      10.10.0.3/24       n2
e4a     true
            n2_clus2   up/up      10.10.0.4/24       n2
e4e     true
4 entries were displayed.
```

3. Verify that the appropriate RCFs and image are installed on the new 3132Q-V switches as necessary for your requirements, and make any essential site customizations, such as users and passwords, network addresses, and so on.

   You must prepare both switches at this time. If you need to upgrade the RCF and image software, you must follow these steps:

   a. Go to Cisco Ethernet Switches on the NetApp Support Site.
   b. Note your switch and the required software versions in the table on that page.
   c. Download the appropriate version of RCF.
   d. Select **CONTINUE** on the **Description** page, accept the license agreement, and then follow the instructions on the **Download** page to download the RCF.
   e. Download the appropriate version of the image software.
4. Select **CONTINUE** on the **Description** page, accept the license agreement, and then follow the instructions on the **Download** page to download the RCF.

What's next?

After you've prepared to migrate your switches, you can configure your ports.

Configure your ports for migration from switchless clusters to switched clusters

Follow these steps to configure your ports for migration from two-node switchless clusters to two-node switched clusters.

Steps

1. On Nexus 3132Q-V switches C1 and C2, disable all node-facing ports C1 and C2, but do not disable the ISL ports.

   Show example

   The following example shows ports 1 through 30 being disabled on Nexus 3132Q-V cluster switches C1 and C2 using a configuration supported in RCF `NX3132_RCF_v1.1_24p10g_26p40g.txt`:

   ```
   C1# copy running-config startup-config
   [########################################] 100%
   Copy complete.
   C1# configure
   C1(config)# int e1/1/1-4,e1/2/1-4,e1/3/1-4,e1/4/1-4,e1/5/1-4,e1/6/1-
   4,e1/7-30
   C1(config-if-range)# shutdown
   C1(config-if-range)# exit
   C1(config)# exit

   C2# copy running-config startup-config
   [########################################] 100%
   Copy complete.
   C2# configure
   C2(config)# int e1/1/1-4,e1/2/1-4,e1/3/1-4,e1/4/1-4,e1/5/1-4,e1/6/1-
   4,e1/7-30
   C2(config-if-range)# shutdown
   C2(config-if-range)# exit
   C2(config)# exit
   ```

2. Connect ports 1/31 and 1/32 on C1 to the same ports on C2 using supported cabling.
3. Verify that the ISL ports are operational on C1 and C2:

   ```
   show port-channel summary
   ```

Show example

```
C1# show port-channel summary
Flags: D - Down         P - Up in port-channel (members)
       I - Individual   H - Hot-standby (LACP only)
       s - Suspended    r - Module-removed
       S - Switched     R - Routed
       U - Up (port-channel)
       M - Not in use. Min-links not met
------------------------------------------------------------------------
------------
Group Port-        Type   Protocol  Member Ports
      Channel
------------------------------------------------------------------------
------------
1     Po1(SU)      Eth    LACP      Eth1/31(P)   Eth1/32(P)

C2# show port-channel summary
Flags: D - Down         P - Up in port-channel (members)
       I - Individual   H - Hot-standby (LACP only)
       s - Suspended    r - Module-removed
       S - Switched     R - Routed
       U - Up (port-channel)
       M - Not in use. Min-links not met
------------------------------------------------------------------------
------------
Group Port-        Type   Protocol  Member Ports
      Channel
------------------------------------------------------------------------
------------
1     Po1(SU)      Eth    LACP      Eth1/31(P)   Eth1/32(P)
```

4. Display the list of neighboring devices on the switch:

   `show cdp neighbors`

Show example

```
C1# show cdp neighbors
Capability Codes: R - Router, T - Trans-Bridge, B - Source-Route-
Bridge
                  S - Switch, H - Host, I - IGMP, r - Repeater,
                  V - VoIP-Phone, D - Remotely-Managed-Device,
                  s - Supports-STP-Dispute

Device-ID          Local Intrfce  Hldtme Capability  Platform
Port ID
C2                 Eth1/31        174    R S I s     N3K-C3132Q-V
Eth1/31
C2                 Eth1/32        174    R S I s     N3K-C3132Q-V
Eth1/32

Total entries displayed: 2

C2# show cdp neighbors
Capability Codes: R - Router, T - Trans-Bridge, B - Source-Route-
Bridge
                  S - Switch, H - Host, I - IGMP, r - Repeater,
                  V - VoIP-Phone, D - Remotely-Managed-Device,
                  s - Supports-STP-Dispute

Device-ID          Local Intrfce  Hldtme Capability  Platform
Port ID
C1                 Eth1/31        178    R S I s     N3K-C3132Q-V
Eth1/31
C1                 Eth1/32        178    R S I s     N3K-C3132Q-V
Eth1/32

Total entries displayed: 2
```

5. Display the cluster port connectivity on each node:

   `network device-discovery show`

Show example

The following example shows a two-node switchless cluster configuration.

```
cluster::*> network device-discovery show
            Local  Discovered
Node        Port   Device               Interface        Platform
----------- ------ ------------------ ----------------
----------------
n1         /cdp
            e4a    n2                   e4a              FAS9000
            e4e    n2                   e4e              FAS9000
n2         /cdp
            e4a    n1                   e4a              FAS9000
            e4e    n1                   e4e              FAS9000
```

6. Migrate the clus1 interface to the physical port hosting clus2:

   `network interface migrate`

   Execute this command from each local node.

   Show example

   ```
   cluster::*> network interface migrate -vserver Cluster -lif n1_clus1
   -source-node n1
   -destination-node n1 -destination-port e4e
   cluster::*> network interface migrate -vserver Cluster -lif n2_clus1
   -source-node n2
   -destination-node n2 -destination-port e4e
   ```

7. Verify the cluster interfaces migration:

   `network interface show`

Show example

```
cluster::*> network interface show -role cluster
 (network interface show)
            Logical    Status     Network            Current
Current Is
Vserver     Interface  Admin/Oper Address/Mask       Node
Port    Home
----------- ---------- ---------- ------------------ -------------
------- ----
Cluster
            n1_clus1   up/up      10.10.0.1/24       n1
e4e     false
            n1_clus2   up/up      10.10.0.2/24       n1
e4e     true
            n2_clus1   up/up      10.10.0.3/24       n2
e4e     false
            n2_clus2   up/up      10.10.0.4/24       n2
e4e     true
4 entries were displayed.
```

8. Shut down cluster ports clus1 LIF on both nodes:

   `network port modify`

```
cluster::*> network port modify -node n1 -port e4a -up-admin false
cluster::*> network port modify -node n2 -port e4a -up-admin false
```

9. Verify the connectivity of the remote cluster interfaces:

ONTAP 9.9.1 and later

You can use the `network interface check cluster-connectivity` command to start an accessibility check for cluster connectivity and then display the details:

`network interface check cluster-connectivity start` and `network interface check cluster-connectivity show`

```
cluster1::*> network interface check cluster-connectivity start
```

NOTE: Wait for a number of seconds before running the show command to display the details.

```
cluster1::*> network interface check cluster-connectivity show
                                  Source           Destination
Packet
Node   Date                       LIF              LIF
Loss
------ -------------------------- ---------------  -----------------
-----------
n1
       3/5/2022 19:21:18 -06:00   n1_clus2         n2_clus1       none
       3/5/2022 19:21:20 -06:00   n1_clus2         n2_clus2       none

n2
       3/5/2022 19:21:18 -06:00   n2_clus2         n1_clus1       none
       3/5/2022 19:21:20 -06:00   n2_clus2         n1_clus2       none
```

All ONTAP releases

For all ONTAP releases, you can also use the `cluster ping-cluster -node <name>` command to check the connectivity:

```
cluster ping-cluster -node <name>
```

```
cluster::*> cluster ping-cluster -node n1
Host is n1
Getting addresses from network interface table...
Cluster n1_clus1 n1     e4a 10.10.0.1
Cluster n1_clus2 n1     e4e 10.10.0.2
Cluster n2_clus1 n2     e4a 10.10.0.3
Cluster n2_clus2 n2     e4e 10.10.0.4

Local = 10.10.0.1 10.10.0.2
Remote = 10.10.0.3 10.10.0.4
Cluster Vserver Id = 4294967293
Ping status:....
Basic connectivity succeeds on 4 path(s)
Basic connectivity fails on 0 path(s)
................
Detected 1500 byte MTU on 32 path(s):
    Local 10.10.0.1 to Remote 10.10.0.3
    Local 10.10.0.1 to Remote 10.10.0.4
    Local 10.10.0.2 to Remote 10.10.0.3
    Local 10.10.0.2 to Remote 10.10.0.4
Larger than PMTU communication succeeds on 4 path(s)
RPC status:
1 paths up, 0 paths down (tcp check)
1 paths up, 0 paths down (ucp check)
```

10. Disconnect the cable from e4a on node n1.

    You can refer to the running configuration and connect the first 40 GbE port on the switch C1 (port 1/7 in this example) to e4a on n1 using supported cabling on Nexus 3132Q-V.

    When reconnecting any cables to a new Cisco cluster switch, the cables used must be either fiber or cabling supported by Cisco.

11. Disconnect the cable from e4a on node n2.

    You can refer to the running configuration and connect e4a to the next available 40 GbE port on C1, port 1/8, using supported cabling.

12. Enable all node-facing ports on C1.

Show example

The following example shows ports 1 through 30 being enabled on Nexus 3132Q-V cluster switches C1 and C2 using the configuration supported in RCF `NX3132_RCF_v1.1_24p10g_26p40g.txt`:

```
C1# configure
C1(config)# int e1/1/1-4,e1/2/1-4,e1/3/1-4,e1/4/1-4,e1/5/1-4,e1/6/1-
4,e1/7-30
C1(config-if-range)# no shutdown
C1(config-if-range)# exit
C1(config)# exit
```

13. Enable the first cluster port, e4a, on each node:

    `network port modify`

    Show example

    ```
    cluster::*> network port modify -node n1 -port e4a -up-admin true
    cluster::*> network port modify -node n2 -port e4a -up-admin true
    ```

14. Verify that the clusters are up on both nodes:

    `network port show`

Show example

```
cluster::*> network port show -role cluster
  (network port show)
Node: n1

Ignore
                                                  Speed(Mbps) Health
Health
Port      IPspace      Broadcast Domain Link MTU  Admin/Oper  Status
Status
--------- ------------ ---------------- ---- ---- -----------
-------- ------
e4a       Cluster      Cluster          up   9000 auto/40000  -
-
e4e       Cluster      Cluster          up   9000 auto/40000  -
-

Node: n2

Ignore
                                                  Speed(Mbps) Health
Health
Port      IPspace      Broadcast Domain Link MTU  Admin/Oper  Status
Status
--------- ------------ ---------------- ---- ---- -----------
-------- ------
e4a       Cluster      Cluster          up   9000 auto/40000  -
-
e4e       Cluster      Cluster          up   9000 auto/40000  -
-
4 entries were displayed.
```

15. For each node, revert all of the migrated cluster interconnect LIFs:

    `network interface revert`

    Show example

    The following example shows the migrated LIFs being reverted to their home ports.

    ```
    cluster::*> network interface revert -vserver Cluster -lif n1_clus1
    cluster::*> network interface revert -vserver Cluster -lif n2_clus1
    ```

16. Verify that all of the cluster interconnect ports are now reverted to their home ports:

    `network interface show`

    The `Is Home` column should display a value of `true` for all of the ports listed in the `Current Port` column. If the displayed value is `false`, the port has not been reverted.

    Show example

```
cluster::*> network interface show -role cluster
 (network interface show)
            Logical    Status     Network            Current
Current Is
Vserver     Interface  Admin/Oper Address/Mask       Node
Port    Home
----------- ---------- ---------- ------------------ -------------
------- ----
Cluster
            n1_clus1   up/up      10.10.0.1/24       n1
e4a     true
            n1_clus2   up/up      10.10.0.2/24       n1
e4e     true
            n2_clus1   up/up      10.10.0.3/24       n2
e4a     true
            n2_clus2   up/up      10.10.0.4/24       n2
e4e     true
4 entries were displayed.
```

17. Display the cluster port connectivity on each node:

    `network device-discovery show`

Show example

```
cluster::*> network device-discovery show
            Local  Discovered
Node        Port   Device               Interface        Platform
----------- ------ ------------------ ----------------
----------------
n1         /cdp
            e4a    C1                 Ethernet1/7      N3K-C3132Q-V
            e4e    n2                 e4e              FAS9000
n2         /cdp
            e4a    C1                 Ethernet1/8      N3K-C3132Q-V
            e4e    n1                 e4e              FAS9000
```

18. On the console of each node, migrate clus2 to port e4a:

    `network interface migrate`

    Show example

    ```
    cluster::*> network interface migrate -vserver Cluster -lif n1_clus2
    -source-node n1
    -destination-node n1 -destination-port e4a
    cluster::*> network interface migrate -vserver Cluster -lif n2_clus2
    -source-node n2
    -destination-node n2 -destination-port e4a
    ```

19. Shut down cluster ports clus2 LIF on both nodes:

    `network port modify`

    The following example shows the specified ports being shut down on both nodes:

    ```
    cluster::*> network port modify -node n1 -port e4e -up-admin false
    cluster::*> network port modify -node n2 -port e4e -up-admin false
    ```

20. Verify the cluster LIF status:

    `network interface show`

Show example

```
cluster::*> network interface show -role cluster
 (network interface show)
            Logical    Status     Network            Current
Current Is
Vserver     Interface  Admin/Oper Address/Mask       Node
Port    Home
----------- ---------- ---------- ------------------ -------------
------- ----
Cluster
            n1_clus1   up/up      10.10.0.1/24       n1
e4a     true
            n1_clus2   up/up      10.10.0.2/24       n1
e4a     false
            n2_clus1   up/up      10.10.0.3/24       n2
e4a     true
            n2_clus2   up/up      10.10.0.4/24       n2
e4a     false
4 entries were displayed.
```

21. Disconnect the cable from e4e on node n1.

    You can refer to the running configuration and connect the first 40 GbE port on the switch C2 (port 1/7 in this example) to e4e on n1 using supported cabling on Nexus 3132Q-V.

22. Disconnect the cable from e4e on node n2.

    You can refer to the running configuration and connect e4e to the next available 40 GbE port on C2, port 1/8, using supported cabling.

23. Enable all node-facing ports on C2.

    Show example

    The following example shows ports 1 through 30 being enabled on Nexus 3132Q-V cluster switches C1 and C2 using a configuration supported in RCF `NX3132_RCF_v1.1_24p10g_26p40g.txt`:

    ```
    C2# configure
    C2(config)# int e1/1/1-4,e1/2/1-4,e1/3/1-4,e1/4/1-4,e1/5/1-4,e1/6/1-
    4,e1/7-30
    C2(config-if-range)# no shutdown
    C2(config-if-range)# exit
    C2(config)# exit
    ```

24. Enable the second cluster port, e4e, on each node:

    `network port modify`

    The following example shows the specified ports being brought up:

    ```
    cluster::*> network port modify -node n1 -port e4e -up-admin true
    cluster::*> network port modify -node n2 -port e4e -up-admin true
    ```

25. For each node, revert all of the migrated cluster interconnect LIFs:

    `network interface revert`

    The following example shows the migrated LIFs being reverted to their home ports.

    ```
    cluster::*> network interface revert -vserver Cluster -lif n1_clus2
    cluster::*> network interface revert -vserver Cluster -lif n2_clus2
    ```

26. Verify that all of the cluster interconnect ports are now reverted to their home ports:

    `network interface show`

    The `Is Home` column should display a value of `true` for all of the ports listed in the `Current Port` column. If the displayed value is `false`, the port has not been reverted.

Show example

```
cluster::*> network interface show -role cluster
 (network interface show)
            Logical    Status     Network            Current
Current Is
Vserver     Interface  Admin/Oper Address/Mask       Node
Port    Home
----------- ---------- ---------- ------------------ -------------
------- ----
Cluster
            n1_clus1   up/up      10.10.0.1/24       n1
e4a     true
            n1_clus2   up/up      10.10.0.2/24       n1
e4e     true
            n2_clus1   up/up      10.10.0.3/24       n2
e4a     true
            n2_clus2   up/up      10.10.0.4/24       n2
e4e     true
4 entries were displayed.
```

27. Verify that all of the cluster interconnect ports are in the `up` state.

    `network port show -role cluster`

Show example

```
cluster::*> network port show -role cluster
  (network port show)
Node: n1

Ignore
                                                  Speed(Mbps) Health
Health
Port      IPspace      Broadcast Domain Link MTU  Admin/Oper  Status
Status
--------- ------------ ---------------- ---- ---- -----------
-------- ------
e4a       Cluster      Cluster          up   9000 auto/40000  -
-
e4e       Cluster      Cluster          up   9000 auto/40000  -
-

Node: n2

Ignore
                                                  Speed(Mbps) Health
Health
Port      IPspace      Broadcast Domain Link MTU  Admin/Oper  Status
Status
--------- ------------ ---------------- ---- ---- -----------
-------- ------
e4a       Cluster      Cluster          up   9000 auto/40000  -
-
e4e       Cluster      Cluster          up   9000 auto/40000  -
-
4 entries were displayed.
```

What's next?

After you've configured your switch ports, you can complete your migration.

Complete the migration from two-node switchless clusters to two-node switched clusters

Follow these steps to complete the migration from switchless clusters to two-node switched clusters.

Steps

1. Display the cluster switch port numbers each cluster port is connected to on each node:

```
network device-discovery show
```

Show example

```
    cluster::*> network device-discovery show
            Local  Discovered
Node        Port   Device               Interface        Platform
----------- ------ ------------------ ----------------
----------------
n1         /cdp
            e4a    C1                 Ethernet1/7      N3K-C3132Q-V
            e4e    C2                 Ethernet1/7      N3K-C3132Q-V
n2         /cdp
            e4a    C1                 Ethernet1/8      N3K-C3132Q-V
            e4e    C2                 Ethernet1/8      N3K-C3132Q-V
```

2. Display discovered and monitored cluster switches:

```
system cluster-switch show
```

Show example

```
cluster::*> system cluster-switch show

Switch                      Type               Address
Model
--------------------------- ------------------ ----------------
---------------
C1                          cluster-network    10.10.1.101
NX3132V
     Serial Number: FOX000001
      Is Monitored: true
            Reason:
  Software Version: Cisco Nexus Operating System (NX-OS) Software,
Version
                    7.0(3)I4(1)
    Version Source: CDP

C2                          cluster-network      10.10.1.102
NX3132V
     Serial Number: FOX000002
      Is Monitored: true
            Reason:
  Software Version: Cisco Nexus Operating System (NX-OS) Software,
Version
                    7.0(3)I4(1)
    Version Source: CDP

2 entries were displayed.
```

3. Disable the two-node switchless configuration settings on any node:

   `network options switchless-cluster`

   ```
   network options switchless-cluster modify -enabled false
   ```

4. Verify that the `switchless-cluster` option has been disabled.

   ```
   network options switchless-cluster show
   ```

5. Verify the connectivity of the remote cluster interfaces:

ONTAP 9.9.1 and later

You can use the `network interface check cluster-connectivity` command to start an accessibility check for cluster connectivity and then display the details:

`network interface check cluster-connectivity start` and `network interface check cluster-connectivity show`

```
cluster1::*> network interface check cluster-connectivity start
```

NOTE: Wait for a number of seconds before running the show command to display the details.

```
cluster1::*> network interface check cluster-connectivity show
                                  Source           Destination
Packet
Node   Date                       LIF              LIF
Loss
------ -------------------------- ---------------  -----------------
-----------
n1
       3/5/2022 19:21:18 -06:00   n1_clus2         n2_clus1       none
       3/5/2022 19:21:20 -06:00   n1_clus2         n2_clus2       none

n2
       3/5/2022 19:21:18 -06:00   n2_clus2         n1_clus1       none
       3/5/2022 19:21:20 -06:00   n2_clus2         n1_clus2       none
```

All ONTAP releases

For all ONTAP releases, you can also use the `cluster ping-cluster -node <name>` command to check the connectivity:

```
cluster ping-cluster -node <name>
```

```
cluster::*> cluster ping-cluster -node n1
Host is n1
Getting addresses from network interface table...
Cluster n1_clus1 n1     e4a 10.10.0.1
Cluster n1_clus2 n1     e4e 10.10.0.2
Cluster n2_clus1 n2     e4a 10.10.0.3
Cluster n2_clus2 n2     e4e 10.10.0.4

Local = 10.10.0.1 10.10.0.2
Remote = 10.10.0.3 10.10.0.4
Cluster Vserver Id = 4294967293
Ping status:....
Basic connectivity succeeds on 4 path(s)
Basic connectivity fails on 0 path(s)
................
Detected 1500 byte MTU on 32 path(s):
    Local 10.10.0.1 to Remote 10.10.0.3
    Local 10.10.0.1 to Remote 10.10.0.4
    Local 10.10.0.2 to Remote 10.10.0.3
    Local 10.10.0.2 to Remote 10.10.0.4
Larger than PMTU communication succeeds on 4 path(s)
RPC status:
1 paths up, 0 paths down (tcp check)
1 paths up, 0 paths down (ucp check)
```

6. If you suppressed automatic case creation, re-enable it by invoking an AutoSupport message:

```
system node autosupport invoke -node * -type all -message MAINT=END
```

What's next?

After you've completed your switch migration, you can configure switch health monitoring.

Replace switches

Requirements for replacing Cisco Nexus 3132Q-V cluster switches

Make sure you understand the configuration requirements, port connections, and cabling requirements when you replace cluster switches.

Cisco Nexus 3132Q-V requirements

- The Cisco Nexus 3132Q-V cluster switch is supported.
- The number of 10 GbE and 40 GbE ports are defined in the reference configuration files (RCFs) available at Cisco® Cluster Network Switch Reference Configuration File Download.

- The cluster switches use the Inter-Switch Link (ISL) ports e1/31-32.
- The Hardware Universe contains information about supported cabling to Nexus 3132Q-V switches:
  - The nodes with 10 GbE cluster connections require QSFP optical modules with breakout fiber cables or QSFP to SFP+ copper break-out cables.
  - The nodes with 40 GbE cluster connections require supported QSFP/QSFP28 optical modules with fiber cables or QSFP/QSFP28 copper direct-attach cables.
  - The cluster switches use the appropriate ISL cabling: 2x QSFP28 fiber or copper direct-attach cables.
- On Nexus 3132Q-V, you can operate QSFP ports as either 40 Gb Ethernet or 4x10 Gb Ethernet modes.

  By default, there are 32 ports in the 40 Gb Ethernet mode. These 40 Gb Ethernet ports are numbered in a 2-tuple naming convention. For example, the second 40 Gb Ethernet port is numbered as 1/2. The process of changing the configuration from 40 Gb Ethernet to 10 Gb Ethernet is called *breakout* and the process of changing the configuration from 10 Gb Ethernet to 40 Gb Ethernet is called *breakin*. When you break out a 40 Gb Ethernet port into 10 Gb Ethernet ports, the resulting ports are numbered using a 3-tuple naming convention. For example, the breakout ports of the second 40 Gb Ethernet port are numbered as 1/2/1, 1/2/2, 1/2/3, and 1/2/4.

- On the left side of Nexus 3132Q-V is a set of four SFP+ ports multiplexed to the first QSFP port.

  By default, the RCF is structured to use the first QSFP port.

  You can make four SFP+ ports active instead of a QSFP port for Nexus 3132Q-V by using the `hardware profile front portmode sfp-plus` command. Similarly, you can reset Nexus 3132Q-V to use a QSFP port instead of four SFP+ ports by using the `hardware profile front portmode qsfp` command.

- You must have configured some of the ports on Nexus 3132Q-V to run at 10 GbE or 40 GbE.

  You can break-out the first six ports into 4x10 GbE mode by using the `interface breakout module 1 port 1-6 map 10g-4x` command. Similarly, you can regroup the first six QSFP+ ports from breakout configuration by using the `no interface breakout module 1 port 1-6 map 10g-4x` command.

- You must have done the planning, migration, and read the required documentation on 10 GbE and 40 GbE connectivity from nodes to Nexus 3132Q-V cluster switches.

  Cisco Ethernet Switches has information about the ONTAP and NX-OS versions supported in this procedure.

Cisco Nexus 5596 requirements

- The following cluster switches are supported:
  - Nexus 5596
  - Nexus 3132Q-V
- The number of 10 GbE and 40 GbE ports are defined in the reference configuration files (RCFs) available at Cisco® Cluster Network Switch Reference Configuration File Download.
- The cluster switches use the following ports for connections to nodes:
  - Ports e1/1-40 (10 GbE): Nexus 5596
  - Ports e1/1-30 (40 GbE): Nexus 3132Q-V

- The cluster switches use the following Inter-Switch Link (ISL) ports:
  - Ports e1/41-48 (10 GbE): Nexus 5596
  - Ports e1/31-32 (40 GbE): Nexus 3132Q-V
- The Hardware Universe contains information about supported cabling to Nexus 3132Q-V switches:
  - Nodes with 10 GbE cluster connections require QSFP to SFP+ optical fiber breakout cables or QSFP to SFP+ copper breakout cables.
  - Nodes with 40 GbE cluster connections require supported QSFP/QSFP28optical modules with fiber cables or QSFP/QSFP28 copper direct-attach cables.
- The cluster switches use the appropriate ISL cabling:
  - Beginning: Nexus 5596 to Nexus 5596 (SFP+ to SFP+)
    - 8x SFP+ fiber or copper direct-attach cables
  - Interim: Nexus 5596 to Nexus 3132Q-V (QSFP to 4xSFP+ break-out)
    - 1x QSFP to SFP+ fiber break-out or copper break-out cables
  - Final: Nexus 3132Q-V to Nexus 3132Q-V (QSFP28 to QSFP28)
    - 2x QSFP28 fiber or copper direct-attach cables
- On Nexus 3132Q-V switches, you can operate QSFP/QSFP28 ports as either 40 Gigabit Ethernet or 4 x10 Gigabit Ethernet modes.

  By default, there are 32 ports in the 40 Gigabit Ethernet mode. These 40 Gigabit Ethernet ports are numbered in a 2-tuple naming convention. For example, the second 40 Gigabit Ethernet port is numbered as 1/2. The process of changing the configuration from 40 Gigabit Ethernet to 10 Gigabit Ethernet is called *breakout* and the process of changing the configuration from 10 Gigabit Ethernet to 40 Gigabit Ethernet is called *breakin*. When you break out a 40 Gigabit Ethernet port into 10 Gigabit Ethernet ports, the resulting ports are numbered using a 3-tuple naming convention. For example, the break-out ports of the second 40 Gigabit Ethernet port are numbered as 1/2/1, 1/2/2, 1/2/3, and 1/2/4.

- On the left side of Nexus 3132Q-V switches is a set of 4 SFP+ ports multiplexed to that QSFP28 port.

  By default, the RCF is structured to use the QSFP28 port.

  You can make 4x SFP+ ports active instead of a QSFP port for Nexus 3132Q-V switches by using the `hardware profile front portmode sfp-plus` command. Similarly, you can reset Nexus 3132Q-V switches to use a QSFP port instead of 4x SFP+ ports by using the `hardware profile front portmode qsfp` command.

- You have configured some of the ports on Nexus 3132Q-V switches to run at 10 GbE or 40 GbE.

  You can break out the first six ports into 4x10 GbE mode by using the `interface breakout module 1 port 1-6 map 10g-4x` command. Similarly, you can regroup the first six QSFP+ ports from breakout configuration by using the `no interface breakout module 1 port 1-6 map 10g-4x` command.

- You have done the planning, migration, and read the required documentation on 10 GbE and 40 GbE connectivity from nodes to Nexus 3132Q-V cluster switches.
- The ONTAP and NX-OS versions supported in this procedure are at Cisco Ethernet Switches.

NetApp CN1610 requirements

- The following cluster switches are supported:
  - NetApp CN1610
  - Cisco Nexus 3132Q-V
- The cluster switches support the following node connections:
  - NetApp CN1610: ports 0/1 through 0/12 (10 GbE)
  - Cisco Nexus 3132Q-V: ports e1/1-30 (40 GbE)
- The cluster switches use the following inter-switch link (ISL) ports:
  - NetApp CN1610: ports 0/13 through 0/16 (10 GbE)
  - Cisco Nexus 3132Q-V: ports e1/31-32 (40 GbE)
- The Hardware Universe contains information about supported cabling to Nexus 3132Q-V switches:
  - Nodes with 10 GbE cluster connections require QSFP to SFP+ optical fiber breakout cables or QSFP to SFP+ copper breakout cables
  - Nodes with 40 GbE cluster connections require supported QSFP/QSFP28 optical modules with optical fiber cables or QSFP/QSFP28 copper direct-attach cables
- The appropriate ISL cabling is as follows:
  - Beginning: For CN1610 to CN1610 (SFP+ to SFP+), four SFP+ optical fiber or copper direct-attach cables
  - Interim: For CN1610 to Nexus 3132Q-V (QSFP to four SFP+ breakout), one QSFP to SFP+ optical fiber or copper breakout cable
  - Final: For Nexus 3132Q-V to Nexus 3132Q-V (QSFP28 to QSFP28), two QSFP28 optical fiber or copper direct-attach cables
- NetApp twinax cables are not compatible with Cisco Nexus 3132Q-V switches.

  If your current CN1610 configuration uses NetApp twinax cables for cluster-node-to-switch connections or ISL connections and you want to continue using twinax in your environment, you need to procure Cisco twinax cables. Alternatively, you can use optical fiber cables for both the ISL connections and the cluster-node-to-switch connections.

- On Nexus 3132Q-V switches, you can operate QSFP/QSFP28 ports as either 40 Gb Ethernet or 4x 10 Gb Ethernet modes.

  By default, there are 32 ports in the 40 Gb Ethernet mode. These 40 Gb Ethernet ports are numbered in a 2-tuple naming convention. For example, the second 40 Gb Ethernet port is numbered as 1/2. The process of changing the configuration from 40 Gb Ethernet to 10 Gb Ethernet is called *breakout* and the process of changing the configuration from 10 Gb Ethernet to 40 Gb Ethernet is called *breakin*. When you break out a 40 Gb Ethernet port into 10 Gb Ethernet ports, the resulting ports are numbered using a 3-tuple naming convention. For example, the breakout ports of the second 40 Gb Ethernet port are numbered as 1/2/1, 1/2/2, 1/2/3, and 1/2/4.

- On the left side of Nexus 3132Q-V switches is a set of four SFP+ ports multiplexed to the first QSFP port.

  By default, the reference configuration file (RCF) is structured to use the first QSFP port.

  You can make four SFP+ ports active instead of a QSFP port for Nexus 3132Q-V switches by using the `hardware profile front portmode sfp-plus` command. Similarly, you can reset Nexus 3132Q-V switches to use a QSFP port instead of four SFP+ ports by using the `hardware profile front`

`portmode qsfp` command.

When you use the first four SFP+ ports, it will disable the first 40GbE QSFP port.

- You must have configured some of the ports on Nexus 3132Q-V switches to run at 10 GbE or 40 GbE.

  You can break out the first six ports into 4x10 GbE mode by using the `interface breakout module 1 port 1-6 map 10g-4x` command. Similarly, you can regroup the first six QSFP+ ports from *breakout* configuration by using the `no interface breakout module 1 port 1-6 map 10g-4x` command.

- You must have done the planning, migration, and read the required documentation on 10 GbE and 40 GbE connectivity from nodes to Nexus 3132Q-V cluster switches.
- The ONTAP and NX-OS versions that are supported in this procedure are listed on Cisco Ethernet Switches.
- The ONTAP and FASTPATH versions that are supported in this procedure are listed on NetApp CN1601 and CN1610 Switches.

Replace Cisco Nexus 3132Q-V cluster switches

Follow this procedure to replace a defective Cisco Nexus 3132Q-V switch in a cluster network. The replacement procedure is a nondisruptive procedure (NDO).

Review requirements

Switch requirements

Review the Requirements for replacing Cisco Nexus 3132Q-V cluster switches.

Before you begin

- The existing cluster and network configuration has:
  - The Nexus 3132Q-V cluster infrastructure is redundant and fully functional on both switches.

    Cisco Ethernet Switch has the latest RCF and NX-OS versions for your switches.

  - All cluster ports are in the `up` state.
  - Management connectivity exists on both switches.
  - All cluster logical interfaces (LIFs) are in the `up` state and have been migrated.
- For the Nexus 3132Q-V replacement switch, make sure that:
  - Management network connectivity on the replacement switch is functional.
  - Console access to the replacement switch is in place.
  - The desired RCF and NX-OS operating system image switch is loaded onto the switch.
  - Initial customization of the switch is complete.
- Hardware Universe

Enable console logging

NetApp strongly recommends that you enable console logging on the devices that you are using and take the following actions when replacing your switch:

- Leave AutoSupport enabled during maintenance.
- Trigger a maintenance AutoSupport before and after maintenance to disable case creation for the duration of the maintenance. See this Knowledge Base article SU92: How to suppress automatic case creation during scheduled maintenance windows for further details.
- Enable session logging for any CLI sessions. For instructions on how to enable session logging, review the "Logging Session Output" section in this Knowledge Base article How to configure PuTTY for optimal connectivity to ONTAP systems.

Replace the switch

This procedure replaces the second Nexus 3132Q-V cluster switch CL2 with new 3132Q-V switch C2.

About the examples

The examples in this procedure use the following switch and node nomenclature:

- n1_clus1 is the first cluster logical interface (LIF) connected to cluster switch C1 for node n1.
- n1_clus2 is the first cluster LIF connected to cluster switch CL2 or C2, for node n1.
- n1_clus3 is the second LIF connected to cluster switch C2, for node n1.
- n1_clus4 is the second LIF connected to cluster switch CL1, for node n1.
- The number of 10 GbE and 40 GbE ports are defined in the reference configuration files (RCFs) available at Cisco® Cluster Network Switch Reference Configuration File Download.
- The nodes are n1, n2, n3, and n4.
  -
  The examples in this procedure use four nodes: Two nodes use four 10 GB cluster interconnect ports: e0a, e0b, e0c, and e0d. The other two nodes use two 40 GB cluster interconnect ports: e4a and e4e. See the Hardware Universe for the actual cluster ports on your platforms.

About this task

This procedure covers the following scenario:

- The cluster starts with four nodes connected to two Nexus 3132Q-V cluster switches, CL1 and CL2.
- Cluster switch CL2 is to be replaced by C2
  - On each node, cluster LIFs connected to CL2 are migrated onto cluster ports connected to CL1.
  - Disconnect cabling from all ports on CL2 and reconnect cabling to the same ports on the replacement switch C2.
  - On each node, its migrated cluster LIFs are reverted.

Step 1: Prepare for replacement

1. If AutoSupport is enabled on this cluster, suppress automatic case creation by invoking an AutoSupport message:

   ```
   system node autosupport invoke -node * -type all - message MAINT=xh
   ```

   x is the duration of the maintenance window in hours.

   > The AutoSupport message notifies technical support of this maintenance task so that automatic case creation is suppressed during the maintenance window.

2. Display information about the devices in your configuration:

```
network device-discovery show
```

Show example

```
cluster::> network device-discovery show
            Local  Discovered
Node        Port   Device               Interface         Platform
----------- ------ ------------------- ----------------
----------------
n1         /cdp
            e0a    CL1                 Ethernet1/1/1    N3K-C3132Q-V
            e0b    CL2                 Ethernet1/1/1    N3K-C3132Q-V
            e0c    CL2                 Ethernet1/1/2    N3K-C3132Q-V
            e0d    CL1                 Ethernet1/1/2    N3K-C3132Q-V
n2         /cdp
            e0a    CL1                 Ethernet1/1/3    N3K-C3132Q-V
            e0b    CL2                 Ethernet1/1/3    N3K-C3132Q-V
            e0c    CL2                 Ethernet1/1/4    N3K-C3132Q-V
            e0d    CL1                 Ethernet1/1/4    N3K-C3132Q-V
n3         /cdp
            e4a    CL1                 Ethernet1/7      N3K-C3132Q-V
            e4e    CL2                 Ethernet1/7      N3K-C3132Q-V
n4         /cdp
            e4a    CL1                 Ethernet1/8      N3K-C3132Q-V
            e4e    CL2                 Ethernet1/8      N3K-C3132Q-V

12 entries were displayed
```

3. Determine the administrative or operational status for each cluster interface:
   a. Display the network port attributes:

```
network port show
```

Show example

```
cluster::*> network port show -role cluster
       (network port show)

Node: n1

Ignore
                                                  Speed(Mbps)
Health   Health
Port      IPspace      Broadcast Domain Link MTU  Admin/Oper
Status   Status
--------- ------------ ---------------- ---- ---- -----------
-------- ------
e0a       Cluster      Cluster          up   9000 auto/10000  -
-
e0b       Cluster      Cluster          up   9000 auto/10000  -
-
e0c       Cluster      Cluster          up   9000 auto/10000  -
-
e0d       Cluster      Cluster          up   9000 auto/10000  -
-

Node: n2

Ignore
                                                  Speed(Mbps)
Health   Health
Port      IPspace      Broadcast Domain Link MTU  Admin/Oper
Status   Status
--------- ------------ ---------------- ---- ---- -----------
-------- ------
e0a       Cluster      Cluster          up   9000  auto/10000 -
-
e0b       Cluster      Cluster          up   9000  auto/10000 -
-
e0c       Cluster      Cluster          up   9000  auto/10000 -
-
e0d       Cluster      Cluster          up   9000  auto/10000 -
-

Node: n3

Ignore
                                                  Speed(Mbps)
Health   Health
```

```
Port      IPspace      Broadcast Domain Link MTU  Admin/Oper
Status   Status
--------- ------------ ---------------- ---- ---- -----------
-------- ------
e4a       Cluster      Cluster          up   9000 auto/40000  -
-
e4e       Cluster      Cluster          up   9000 auto/40000  -
-

Node: n4

Ignore
                                                   Speed(Mbps)
Health   Health
Port      IPspace      Broadcast Domain Link MTU  Admin/Oper
Status   Status
--------- ------------ ---------------- ---- ---- -----------
-------- ------
e4a       Cluster      Cluster          up   9000 auto/40000  -
-
e4e       Cluster      Cluster          up   9000 auto/40000  -
-
12 entries were displayed.
```

b. Display information about the logical interfaces:

```
network interface show
```

Show example

```
cluster::*> network interface show -role cluster
       (network interface show)

             Logical    Status     Network            Current
Current Is
Vserver     Interface  Admin/Oper Address/Mask       Node
Port    Home
----------- ---------- ---------- ------------------
------------- ------- ----
Cluster
            n1_clus1   up/up      10.10.0.1/24       n1
e0a     true
            n1_clus2   up/up      10.10.0.2/24       n1
e0b     true
            n1_clus3   up/up      10.10.0.3/24       n1
e0c     true
            n1_clus4   up/up      10.10.0.4/24       n1
e0d     true
            n2_clus1   up/up      10.10.0.5/24       n2
e0a     true
            n2_clus2   up/up      10.10.0.6/24       n2
e0b     true
            n2_clus3   up/up      10.10.0.7/24       n2
e0c     true
            n2_clus4   up/up      10.10.0.8/24       n2
e0d     true
            n3_clus1   up/up      10.10.0.9/24       n3
e0a     true
            n3_clus2   up/up      10.10.0.10/24      n3
e0e     true
            n4_clus1   up/up      10.10.0.11/24      n4
e0a     true
            n4_clus2   up/up      10.10.0.12/24      n4
e0e     true

12 entries were displayed.
```

c. Display the information on the discovered cluster switches:

```
system cluster-switch show
```

Show example

```
cluster::> system cluster-switch show

Switch                      Type               Address
Model
--------------------------- ------------------ ----------------
---------------
CL1                          cluster-network   10.10.1.101
NX3132V
     Serial Number: FOX000001
      Is Monitored: true
            Reason:
  Software Version: Cisco Nexus Operating System (NX-OS)
Software, Version
                    7.0(3)I4(1)
    Version Source: CDP

CL2                          cluster-network   10.10.1.102
NX3132V
     Serial Number: FOX000002
      Is Monitored: true
            Reason:
  Software Version: Cisco Nexus Operating System (NX-OS)
Software, Version
                    7.0(3)I4(1)
    Version Source: CDP

2 entries were displayed.
```

4. Verify that the appropriate RCF and image are installed on the new Nexus 3132Q-V switch as necessary for your requirements, and make any essential site customizations.

   You must prepare the replacement switch at this time. If you need to upgrade the RCF and image, you must follow these steps:

   a. On the NetApp Support Site, see Cisco Ethernet Switches.
   b. Note your switch and the required software versions in the table on that page.
   c. Download the appropriate version of the RCF.
   d. Click **CONTINUE** on the **Description** page, accept the license agreement, and then follow the instructions on the **Download** page to download the RCF.
   e. Download the appropriate version of the image software.

5. Migrate the LIFs associated to the cluster ports connected to switch C2:

   ```
   network interface migrate
   ```

Show example

This example shows that the LIF migration is done on all the nodes:

```
cluster::*> network interface migrate -vserver Cluster -lif n1_clus2
-source-node n1 –destination-node n1 -destination-port e0a
cluster::*> network interface migrate -vserver Cluster -lif n1_clus3
-source-node n1 –destination-node n1 -destination-port e0d
cluster::*> network interface migrate -vserver Cluster -lif n2_clus2
-source-node n2 –destination-node n2 -destination-port e0a
cluster::*> network interface migrate -vserver Cluster -lif n2_clus3
-source-node n2 –destination-node n2 -destination-port e0d
cluster::*> network interface migrate -vserver Cluster -lif n3_clus2
-source-node n3 –destination-node n3 -destination-port e4a
cluster::*> network interface migrate -vserver Cluster -lif n4_clus2
-source-node n4 –destination-node n4 -destination-port e4a
```

6. Verify cluster's health:

   `network interface show`

Show example

```
cluster::*> network interface show -role cluster
       (network interface show)

            Logical    Status     Network            Current
Current Is
Vserver     Interface  Admin/Oper Address/Mask       Node
Port    Home
----------- ---------- ---------- ------------------ -------------
------- ----
Cluster
            n1_clus1   up/up      10.10.0.1/24       n1
e0a     true
            n1_clus2   up/up      10.10.0.2/24       n1
e0a     false
            n1_clus3   up/up      10.10.0.3/24       n1
e0d     false
            n1_clus4   up/up      10.10.0.4/24       n1
e0d     true
            n2_clus1   up/up      10.10.0.5/24       n2
e0a     true
            n2_clus2   up/up      10.10.0.6/24       n2
e0a     false
            n2_clus3   up/up      10.10.0.7/24       n2
e0d     false
            n2_clus4   up/up      10.10.0.8/24       n2
e0d     true
            n3_clus1   up/up      10.10.0.9/24       n3
e4a     true
            n3_clus2   up/up      10.10.0.10/24      n3
e4a     false
            n4_clus1   up/up      10.10.0.11/24      n4
e4a     true
            n4_clus2   up/up      10.10.0.12/24      n4
e4a     false
12 entries were displayed.
```

7. Shut down the cluster interconnect ports that are physically connected to switch CL2:

   `network port modify`

Show example

This example shows the specified ports being shut down on all nodes:

```
cluster::*> network port modify -node n1 -port e0b -up-admin false
cluster::*> network port modify -node n1 -port e0c -up-admin false
cluster::*> network port modify -node n2 -port e0b -up-admin false
cluster::*> network port modify -node n2 -port e0c -up-admin false
cluster::*> network port modify -node n3 -port e4e -up-admin false
cluster::*> network port modify -node n4 -port e4e -up-admin false
```

8. Verify the connectivity of the remote cluster interfaces:

ONTAP 9.9.1 and later

You can use the `network interface check cluster-connectivity` command to start an accessibility check for cluster connectivity and then display the details:

`network interface check cluster-connectivity start` and `network interface check cluster-connectivity show`

```
cluster1::*> network interface check cluster-connectivity start
```

NOTE: Wait for a number of seconds before running the show command to display the details.

```
cluster1::*> network interface check cluster-connectivity show
                                Source     Destination   Packet
Node   Date                     LIF        LIF           Loss
------ ------------------------ ---------- ------------- -----------
n1
       3/5/2022 19:21:18 -06:00   n1_clus2   n2_clus1      none
       3/5/2022 19:21:20 -06:00   n1_clus2   n2_clus2      none

n2
       3/5/2022 19:21:18 -06:00   n2_clus2   n1_clus1      none
       3/5/2022 19:21:20 -06:00   n2_clus2   n1_clus2      none
n3
...
...
n4
...
...
```

All ONTAP releases

For all ONTAP releases, you can also use the `cluster ping-cluster -node <name>` command to check the connectivity:

`cluster ping-cluster -node <name>`

```
cluster::*> cluster ping-cluster -node n1
Host is n1
Getting addresses from network interface table...
Cluster n1_clus1 n1     e0a 10.10.0.1
Cluster n1_clus2 n1     e0b 10.10.0.2
Cluster n1_clus3 n1     e0c 10.10.0.3
Cluster n1_clus4 n1     e0d 10.10.0.4
Cluster n2_clus1 n2     e0a 10.10.0.5
Cluster n2_clus2 n2     e0b 10.10.0.6
```

```
Cluster n2_clus3 n2     e0c 10.10.0.7
Cluster n2_clus4 n2     e0d 10.10.0.8
Cluster n3_clus1 n4     e0a 10.10.0.9
Cluster n3_clus2 n3     e0e 10.10.0.10
Cluster n4_clus1 n4     e0a 10.10.0.11
Cluster n4_clus2 n4     e0e 10.10.0.12

Local = 10.10.0.1 10.10.0.2 10.10.0.3 10.10.0.4
Remote = 10.10.0.5 10.10.0.6 10.10.0.7 10.10.0.8 10.10.0.9 10.10.0.10
10.10.0.11 10.10.0.12
Cluster Vserver Id = 4294967293
Ping status:
....
Basic connectivity succeeds on 32 path(s)
Basic connectivity fails on 0 path(s)
................
Detected 1500 byte MTU on 32 path(s):
    Local 10.10.0.1 to Remote 10.10.0.5
    Local 10.10.0.1 to Remote 10.10.0.6
    Local 10.10.0.1 to Remote 10.10.0.7
    Local 10.10.0.1 to Remote 10.10.0.8
    Local 10.10.0.1 to Remote 10.10.0.9
    Local 10.10.0.1 to Remote 10.10.0.10
    Local 10.10.0.1 to Remote 10.10.0.11
    Local 10.10.0.1 to Remote 10.10.0.12
    Local 10.10.0.2 to Remote 10.10.0.5
    Local 10.10.0.2 to Remote 10.10.0.6
    Local 10.10.0.2 to Remote 10.10.0.7
    Local 10.10.0.2 to Remote 10.10.0.8
    Local 10.10.0.2 to Remote 10.10.0.9
    Local 10.10.0.2 to Remote 10.10.0.10
    Local 10.10.0.2 to Remote 10.10.0.11
    Local 10.10.0.2 to Remote 10.10.0.12
    Local 10.10.0.3 to Remote 10.10.0.5
    Local 10.10.0.3 to Remote 10.10.0.6
    Local 10.10.0.3 to Remote 10.10.0.7
    Local 10.10.0.3 to Remote 10.10.0.8
    Local 10.10.0.3 to Remote 10.10.0.9
    Local 10.10.0.3 to Remote 10.10.0.10
    Local 10.10.0.3 to Remote 10.10.0.11
    Local 10.10.0.3 to Remote 10.10.0.12
    Local 10.10.0.4 to Remote 10.10.0.5
    Local 10.10.0.4 to Remote 10.10.0.6
    Local 10.10.0.4 to Remote 10.10.0.7
    Local 10.10.0.4 to Remote 10.10.0.8
    Local 10.10.0.4 to Remote 10.10.0.9
```

```
    Local 10.10.0.4 to Remote 10.10.0.10
    Local 10.10.0.4 to Remote 10.10.0.11
    Local 10.10.0.4 to Remote 10.10.0.12

Larger than PMTU communication succeeds on 32 path(s)
RPC status:
8 paths up, 0 paths down (tcp check)
8 paths up, 0 paths down (udp check)
```

9. Shut down the ports 1/31 and 1/32 on CL1, and the active Nexus 3132Q-V switch:

   `shutdown`

   Show example

   This example shows the ISL ports 1/31 and 1/32 being shut down on switch CL1:

   ```
   (CL1)# configure
   (CL1)(Config)# interface e1/31-32
   (CL1)(config-if-range)# shutdown
   (CL1)(config-if-range)# exit
   (CL1)(Config)# exit
   (CL1)#
   ```

Step 2: Configure ports

1. Remove all the cables attached to the Nexus 3132Q-V switch CL2 and reconnect them to the replacement switch C2 on all nodes.
2. Remove the ISL cables from ports e1/31 and e1/32 on CL2 and reconnect them to the same ports on the replacement switch C2.
3. Bring up ISLs ports 1/31 and 1/32 on the Nexus 3132Q-V switch CL1:

   ```
   (CL1)# configure
   (CL1)(Config)# interface e1/31-32
   (CL1)(config-if-range)# no shutdown
   (CL1)(config-if-range)# exit
   (CL1)(Config)# exit
   (CL1)#
   ```

4. Verify that the ISLs are up on CL1:

   `show port-channel`

Ports Eth1/31 and Eth1/32 should indicate `(P)`, which means that the ISL ports are up in the port-channel.

Show example

```
CL1# show port-channel summary
Flags: D - Down         P - Up in port-channel (members)
       I - Individual   H - Hot-standby (LACP only)
       s - Suspended    r - Module-removed
       S - Switched     R - Routed
       U - Up (port-channel)
       M - Not in use. Min-links not met
------------------------------------------------------------------------
------------
Group Port-        Type   Protocol  Member
Ports
      Channel
------------------------------------------------------------------------
------------
1     Po1(SU)      Eth    LACP      Eth1/31(P)   Eth1/32(P)
```

5. Verify that the ISLs are up on C2:

   `show port-channel summary`

   Ports Eth1/31 and Eth1/32 should indicate `(P)`, which means that both ISL ports are up in the port-channel.

   Show example

```
C2# show port-channel summary
Flags: D - Down         P - Up in port-channel (members)
       I - Individual   H - Hot-standby (LACP only)
       s - Suspended    r - Module-removed
       S - Switched     R - Routed
       U - Up (port-channel)
       M - Not in use. Min-links not met
------------------------------------------------------------------------
------------
Group Port-        Type   Protocol  Member Ports
      Channel
------------------------------------------------------------------------
------------
1     Po1(SU)      Eth    LACP      Eth1/31(P)   Eth1/32(P)
```

6. On all nodes, bring up all the cluster interconnect ports connected to the Nexus 3132Q-V switch C2:

   `network port modify`

   Show example

   ```
   cluster::*> network port modify -node n1 -port e0b -up-admin true
   cluster::*> network port modify -node n1 -port e0c -up-admin true
   cluster::*> network port modify -node n2 -port e0b -up-admin true
   cluster::*> network port modify -node n2 -port e0c -up-admin true
   cluster::*> network port modify -node n3 -port e4e -up-admin true
   cluster::*> network port modify -node n4 -port e4e -up-admin true
   ```

7. For all nodes, revert all of the migrated cluster interconnect LIFs:

   `network interface revert`

   Show example

   ```
   cluster::*> network interface revert -vserver Cluster -lif n1_clus2
   cluster::*> network interface revert -vserver Cluster -lif n1_clus3
   cluster::*> network interface revert -vserver Cluster -lif n2_clus2
   cluster::*> network interface revert -vserver Cluster -lif n2_clus3
   cluster::*> network interface revert -vserver Cluster -lif n3_clus2
   cluster::*> network interface revert -vserver Cluster -lif n4_clus2
   ```

8. Verify that the cluster interconnect ports are now reverted to their home:

   `network interface show`

Show example

This example shows that all the LIFs are successfully reverted because the ports listed under the `Current Port` column have a status of `true` in the `Is Home` column. If the `Is Home` column value is `false`, the LIF has not been reverted.

```
cluster::*> network interface show -role cluster
 (network interface show)
            Logical    Status     Network            Current
Current Is
Vserver     Interface  Admin/Oper Address/Mask       Node
Port    Home
----------- ---------- ---------- ------------------ -------------
------- ----
Cluster
            n1_clus1   up/up      10.10.0.1/24       n1
e0a     true
            n1_clus2   up/up      10.10.0.2/24       n1
e0b     true
            n1_clus3   up/up      10.10.0.3/24       n1
e0c     true
            n1_clus4   up/up      10.10.0.4/24       n1
e0d     true
            n2_clus1   up/up      10.10.0.5/24       n2
e0a     true
            n2_clus2   up/up      10.10.0.6/24       n2
e0b     true
            n2_clus3   up/up      10.10.0.7/24       n2
e0c     true
            n2_clus4   up/up      10.10.0.8/24       n2
e0d     true
            n3_clus1   up/up      10.10.0.9/24       n3
e4a     true
            n3_clus2   up/up      10.10.0.10/24      n3
e4e     true
            n4_clus1   up/up      10.10.0.11/24      n4
e4a     true
            n4_clus2   up/up      10.10.0.12/24      n4
e4e     true
12 entries were displayed.
```

9. Verify that the cluster ports are connected:

   `network port show`

Show example

```
cluster::*> network port show -role cluster
  (network port show)
Node: n1

Ignore
                                                  Speed(Mbps) Health
Health
Port      IPspace      Broadcast Domain Link MTU  Admin/Oper  Status
Status
--------- ------------ ---------------- ---- ---- -----------
-------- ------
e0a       Cluster      Cluster          up   9000 auto/10000  -
-
e0b       Cluster      Cluster          up   9000 auto/10000  -
-
e0c       Cluster      Cluster          up   9000 auto/10000  -
-
e0d       Cluster      Cluster          up   9000 auto/10000  -
-

Node: n2

Ignore
                                                  Speed(Mbps) Health
Health
Port      IPspace      Broadcast Domain Link MTU  Admin/Oper  Status
Status
--------- ------------ ---------------- ---- ---- -----------
-------- ------
e0a       Cluster      Cluster          up   9000  auto/10000 -
-
e0b       Cluster      Cluster          up   9000  auto/10000 -
-
e0c       Cluster      Cluster          up   9000  auto/10000 -
-
e0d       Cluster      Cluster          up   9000  auto/10000 -
-

Node: n3

Ignore
                                                  Speed(Mbps) Health
Health
Port      IPspace      Broadcast Domain Link MTU  Admin/Oper  Status
```

```
Status
--------- ------------ ---------------- ---- ---- -----------
-------- ------
e4a       Cluster      Cluster          up   9000 auto/40000  -
-
e4e       Cluster      Cluster          up   9000 auto/40000  -
-

Node: n4

Ignore
                                                  Speed(Mbps) Health
Health
Port      IPspace      Broadcast Domain Link MTU  Admin/Oper  Status
Status
--------- ------------ ---------------- ---- ---- -----------
-------- ------
e4a       Cluster      Cluster          up   9000 auto/40000  -
-
e4e       Cluster      Cluster          up   9000 auto/40000  -
-
12 entries were displayed.
```

10. Verify the connectivity of the remote cluster interfaces:

ONTAP 9.9.1 and later

You can use the `network interface check cluster-connectivity` command to start an accessibility check for cluster connectivity and then display the details:

`network interface check cluster-connectivity start` and `network interface check cluster-connectivity show`

```
cluster1::*> network interface check cluster-connectivity start
```

NOTE: Wait for a number of seconds before running the show command to display the details.

```
cluster1::*> network interface check cluster-connectivity show
                                  Source     Destination   Packet
Node   Date                       LIF        LIF           Loss
------ -------------------------- ---------- ------------- -----------
n1
       3/5/2022 19:21:18 -06:00   n1_clus2   n2_clus1      none
       3/5/2022 19:21:20 -06:00   n1_clus2   n2_clus2      none

n2
       3/5/2022 19:21:18 -06:00   n2_clus2   n1_clus1      none
       3/5/2022 19:21:20 -06:00   n2_clus2   n1_clus2      none
n3
...
...
n4
...
...
```

All ONTAP releases

For all ONTAP releases, you can also use the `cluster ping-cluster -node <name>` command to check the connectivity:

`cluster ping-cluster -node <name>`

```
cluster::*> cluster ping-cluster -node n1
Host is n1
Getting addresses from network interface table...
Cluster n1_clus1 n1     e0a 10.10.0.1
Cluster n1_clus2 n1     e0b 10.10.0.2
Cluster n2_clus1 n2     e0a 10.10.0.5
Cluster n2_clus2 n2     e0b 10.10.0.6
Cluster n2_clus3 n2     e0c 10.10.0.7
Cluster n2_clus4 n2     e0d 10.10.0.8
```

```
Cluster n3_clus1 n3     e0a 10.10.0.9
Cluster n3_clus2 n3     e0e 10.10.0.10
Cluster n4_clus1 n4     e0a 10.10.0.11
Cluster n4_clus2 n4     e0e 10.10.0.12

Local = 10.10.0.1 10.10.0.2 10.10.0.3 10.10.0.4
Remote = 10.10.0.5 10.10.0.6 10.10.0.7 10.10.0.8 10.10.0.9 10.10.0.10
10.10.0.11 10.10.0.12
Cluster Vserver Id = 4294967293
Ping status:
....
Basic connectivity succeeds on 32 path(s)
Basic connectivity fails on 0 path(s)
................
Detected 1500 byte MTU on 32 path(s):
    Local 10.10.0.1 to Remote 10.10.0.5
    Local 10.10.0.1 to Remote 10.10.0.6
    Local 10.10.0.1 to Remote 10.10.0.7
    Local 10.10.0.1 to Remote 10.10.0.8
    Local 10.10.0.1 to Remote 10.10.0.9
    Local 10.10.0.1 to Remote 10.10.0.10
    Local 10.10.0.1 to Remote 10.10.0.11
    Local 10.10.0.1 to Remote 10.10.0.12
    Local 10.10.0.2 to Remote 10.10.0.5
    Local 10.10.0.2 to Remote 10.10.0.6
    Local 10.10.0.2 to Remote 10.10.0.7
    Local 10.10.0.2 to Remote 10.10.0.8
    Local 10.10.0.2 to Remote 10.10.0.9
    Local 10.10.0.2 to Remote 10.10.0.10
    Local 10.10.0.2 to Remote 10.10.0.11
    Local 10.10.0.2 to Remote 10.10.0.12
    Local 10.10.0.3 to Remote 10.10.0.5
    Local 10.10.0.3 to Remote 10.10.0.6
    Local 10.10.0.3 to Remote 10.10.0.7
    Local 10.10.0.3 to Remote 10.10.0.8
    Local 10.10.0.3 to Remote 10.10.0.9
    Local 10.10.0.3 to Remote 10.10.0.10
    Local 10.10.0.3 to Remote 10.10.0.11
    Local 10.10.0.3 to Remote 10.10.0.12
    Local 10.10.0.4 to Remote 10.10.0.5
    Local 10.10.0.4 to Remote 10.10.0.6
    Local 10.10.0.4 to Remote 10.10.0.7
    Local 10.10.0.4 to Remote 10.10.0.8
    Local 10.10.0.4 to Remote 10.10.0.9
    Local 10.10.0.4 to Remote 10.10.0.10
    Local 10.10.0.4 to Remote 10.10.0.11
```

```
    Local 10.10.0.4 to Remote 10.10.0.12

Larger than PMTU communication succeeds on 32 path(s)
RPC status:
8 paths up, 0 paths down (tcp check)
8 paths up, 0 paths down (udp check)
```

Step 3: Verify the configuration

1. Display the information about the devices in your configuration:
    - `network device-discovery show`
    - `network port show -role cluster`
    - `network interface show -role cluster`
    - `system cluster-switch show`

Show example

```
cluster::> network device-discovery show
            Local  Discovered
Node        Port   Device               Interface        Platform
----------- ------ ------------------ ----------------
----------------
n1         /cdp
            e0a    C1                 Ethernet1/1/1    N3K-C3132Q-V
            e0b    C2                 Ethernet1/1/1    N3K-C3132Q-V
            e0c    C2                 Ethernet1/1/2    N3K-C3132Q-V
            e0d    C1                 Ethernet1/1/2    N3K-C3132Q-V
n2         /cdp
            e0a    C1                 Ethernet1/1/3    N3K-C3132Q-V
            e0b    C2                 Ethernet1/1/3    N3K-C3132Q-V
            e0c    C2                 Ethernet1/1/4    N3K-C3132Q-V
            e0d    C1                 Ethernet1/1/4    N3K-C3132Q-V
n3         /cdp
            e4a    C1                 Ethernet1/7      N3K-C3132Q-V
            e4e    C2                 Ethernet1/7      N3K-C3132Q-V
n4         /cdp
            e4a    C1                 Ethernet1/8      N3K-C3132Q-V
            e4e    C2                 Ethernet1/8      N3K-C3132Q-V
12 entries were displayed.
```

```
cluster::*> network port show -role cluster
  (network port show)
Node: n1

Ignore
                                                  Speed(Mbps) Health
Health
Port      IPspace      Broadcast Domain Link MTU  Admin/Oper  Status
Status
--------- ------------ ---------------- ---- ---- -----------
-------- ------
e0a       Cluster      Cluster          up   9000 auto/10000  -
-
e0b       Cluster      Cluster          up   9000 auto/10000  -
-
e0c       Cluster      Cluster          up   9000 auto/10000  -
-
e0d       Cluster      Cluster          up   9000 auto/10000  -
-
```

```
Node: n2

Ignore
                                                       Speed(Mbps) Health
Health
Port      IPspace      Broadcast Domain Link MTU  Admin/Oper  Status
Status
--------- ------------ ---------------- ---- ---- -----------
-------- ------
e0a       Cluster      Cluster          up   9000  auto/10000 -
-
e0b       Cluster      Cluster          up   9000  auto/10000 -
-
e0c       Cluster      Cluster          up   9000  auto/10000 -
-
e0d       Cluster      Cluster          up   9000  auto/10000 -
-

Node: n3

Ignore
                                                       Speed(Mbps) Health
Health
Port      IPspace      Broadcast Domain Link MTU  Admin/Oper  Status
Status
--------- ------------ ---------------- ---- ---- -----------
-------- ------
e4a       Cluster      Cluster          up   9000 auto/40000  -
-
e4e       Cluster      Cluster          up   9000 auto/40000  -
-

Node: n4

Ignore
                                                       Speed(Mbps) Health
Health
Port      IPspace      Broadcast Domain Link MTU  Admin/Oper  Status
Status
--------- ------------ ---------------- ---- ---- -----------
-------- ------
e4a       Cluster      Cluster          up   9000 auto/40000  -
-
e4e       Cluster      Cluster          up   9000 auto/40000  -
-
```

```
12 entries were displayed.
```

```
cluster::*> network interface show -role cluster
 (network interface show)
            Logical    Status     Network            Current
Current Is
Vserver     Interface  Admin/Oper Address/Mask       Node
Port    Home
----------- ---------- ---------- ------------------ -------------
------- ----
Cluster
            n1_clus1   up/up      10.10.0.1/24       n1
e0a     true
            n1_clus2   up/up      10.10.0.2/24       n1
e0b     true
            n1_clus3   up/up      10.10.0.3/24       n1
e0c     true
            n1_clus4   up/up      10.10.0.4/24       n1
e0d     true
            n2_clus1   up/up      10.10.0.5/24       n2
e0a     true
            n2_clus2   up/up      10.10.0.6/24       n2
e0b     true
            n2_clus3   up/up      10.10.0.7/24       n2
e0c     true
            n2_clus4   up/up      10.10.0.8/24       n2
e0d     true
            n3_clus1   up/up      10.10.0.9/24       n3
e4a     true
            n3_clus2   up/up      10.10.0.10/24      n3
e4e     true
            n4_clus1   up/up      10.10.0.11/24      n4
e4a     true
            n4_clus2   up/up      10.10.0.12/24      n4
e4e     true
12 entries were displayed.
```

```
cluster::*> system cluster-switch show

Switch                      Type               Address
Model
--------------------------- ------------------ ----------------
---------------
CL1                          cluster-network   10.10.1.101
NX3132V
     Serial Number: FOX000001
      Is Monitored: true
            Reason:
  Software Version: Cisco Nexus Operating System (NX-OS) Software,
Version
                    7.0(3)I4(1)
    Version Source: CDP

CL2                          cluster-network   10.10.1.102
NX3132V
     Serial Number: FOX000002
      Is Monitored: true
            Reason:
  Software Version: Cisco Nexus Operating System (NX-OS) Software,
Version
                    7.0(3)I4(1)
    Version Source: CDP
C2                          cluster-network    10.10.1.103
NX3132V
     Serial Number: FOX000003
      Is Monitored: true
            Reason:
  Software Version: Cisco Nexus Operating System (NX-OS) Software,
Version
                    7.0(3)I4(1)
    Version Source: CDP

3 entries were displayed.
```

2. Remove the replaced Nexus 3132Q-V switch, if it is not already removed automatically:

   `system cluster-switch delete`

```
cluster::*> system cluster-switch delete –device CL2
```

3. Verify that the proper cluster switches are monitored:

```
system cluster-switch show
```

Show example

```
cluster::> system cluster-switch show

Switch                      Type               Address
Model
--------------------------- ------------------ ----------------
---------------
CL1                          cluster-network    10.10.1.101
NX3132V
     Serial Number: FOX000001
      Is Monitored: true
            Reason:
  Software Version: Cisco Nexus Operating System (NX-OS) Software,
Version
                    7.0(3)I4(1)
    Version Source: CDP

C2                          cluster-network     10.10.1.103
NX3132V
     Serial Number: FOX000002
      Is Monitored: true
            Reason:
  Software Version: Cisco Nexus Operating System (NX-OS) Software,
Version
                    7.0(3)I4(1)
    Version Source: CDP

2 entries were displayed.
```

4. If you suppressed automatic case creation, re-enable it by invoking an AutoSupport message:

```
system node autosupport invoke -node * -type all -message MAINT=END
```

What's next?

After you've replaced your switch, you can configure switch health monitoring.

Replace Cisco Nexus 3132Q-V cluster switches with switchless connections

In ONTAP 9.3 and later, you can migrate from a cluster with a switched cluster network to one where two nodes are directly connected.

NetApp recommends that you update your ONTAP version before proceeding with the switched to switchless cluster operation for Cisco Nexus 3132Q-V switches.

See the following for more details:

- SU540: Chelsio T6 NIC errors cause system shutdown when upgrading from 40G to 100G network switches
- Node panic after migration from switched to switchless cluster

You can migrate from a cluster with a switched cluster network to one where two nodes are directly connected for ONTAP 9.3 and later.

Review requirements

Guidelines

Review the following guidelines:

- Migrating to a two-node switchless cluster configuration is a nondisruptive operation. Most systems have two dedicated cluster interconnect ports on each node, but you can also use this procedure for systems with a larger number of dedicated cluster interconnect ports on each node, such as four, six or eight.
- You cannot use the switchless cluster interconnect feature with more than two nodes.
- If you have an existing two-node cluster that uses cluster interconnect switches and is running ONTAP 9.3 or later, you can replace the switches with direct, back-to-back connections between the nodes.

Before you begin

Make sure you have the following:

- A healthy cluster that consists of two nodes connected by cluster switches. The nodes must be running the same ONTAP release.
- Each node with the required number of dedicated cluster ports, which provide redundant cluster interconnect connections to support your system configuration. For example, there are two redundant ports for a system with two dedicated cluster interconnect ports on each node.

Migrate the switches

About this task

The following procedure removes the cluster switches in a two-node cluster and replaces each connection to the switch with a direct connection to the partner node.

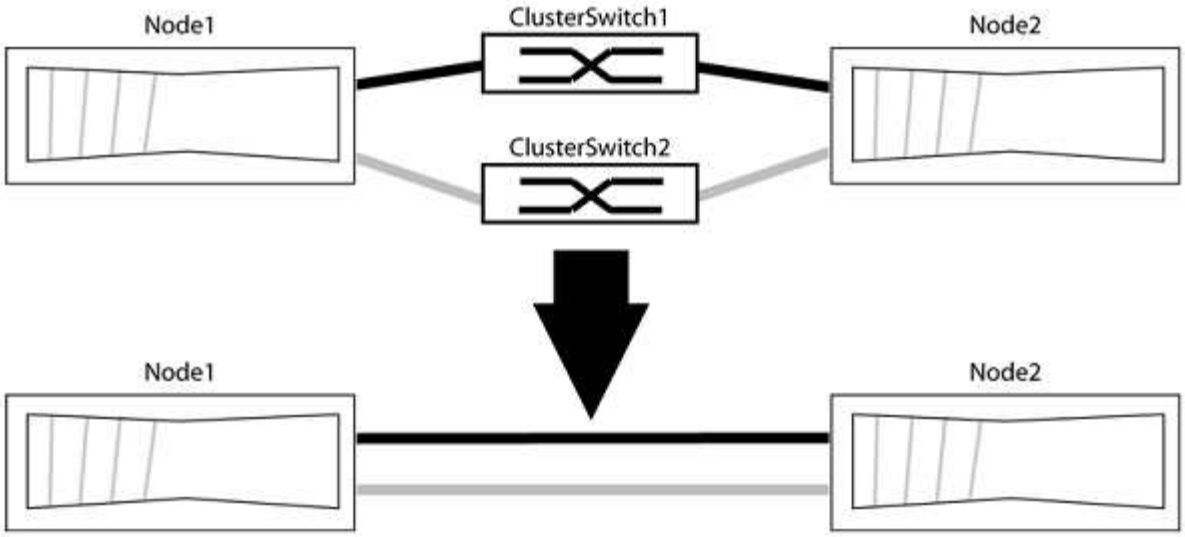

About the examples

The examples in the following procedure show nodes that are using "e0a" and "e0b" as cluster ports. Your nodes might be using different cluster ports as they vary by system.

Step 1: Prepare for migration

1. Change the privilege level to advanced, entering `y` when prompted to continue:

   ```
   set -privilege advanced
   ```

   The advanced prompt `*>` appears.

2. ONTAP 9.3 and later supports automatic detection of switchless clusters, which is enabled by default.

   You can verify that detection of switchless clusters is enabled by running the advanced privilege command:

   ```
   network options detect-switchless-cluster show
   ```

   Show example

   The following example output shows if the option is enabled.

   ```
   cluster::*> network options detect-switchless-cluster show
      (network options detect-switchless-cluster show)
   Enable Switchless Cluster Detection: true
   ```

   If "Enable Switchless Cluster Detection" is `false`, contact NetApp support.

3. If AutoSupport is enabled on this cluster, suppress automatic case creation by invoking an AutoSupport message:

   ```
   system node autosupport invoke -node * -type all -message
   MAINT=<number_of_hours>h
   ```

where `h` is the duration of the maintenance window in hours. The message notifies technical support of this maintenance task so that they can suppress automatic case creation during the maintenance window.

In the following example, the command suppresses automatic case creation for two hours:

Show example

```
cluster::*> system node autosupport invoke -node * -type all
-message MAINT=2h
```

Step 2: Configure ports and cabling

1. Organize the cluster ports on each switch into groups so that the cluster ports in group1 go to cluster switch1 and the cluster ports in group2 go to cluster switch2. These groups are required later in the procedure.
2. Identify the cluster ports and verify link status and health:

   `network port show -ipspace Cluster`

   In the following example for nodes with cluster ports "e0a" and "e0b", one group is identified as “node1:e0a” and “node2:e0a” and the other group as “node1:e0b” and “node2:e0b”. Your nodes might be using different cluster ports because they vary by system.

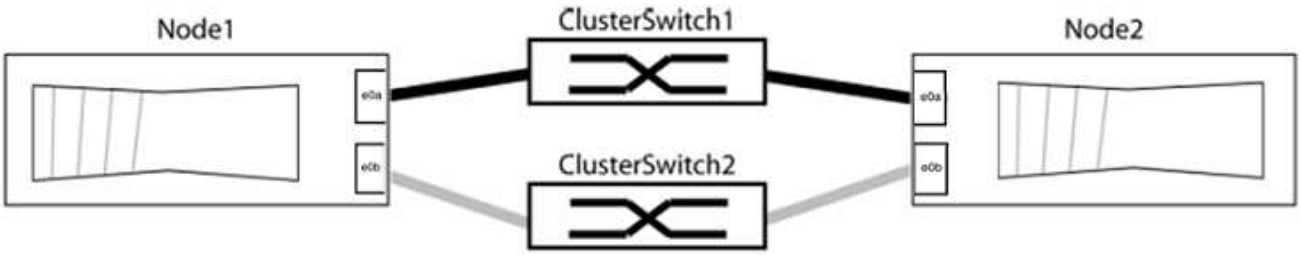

   Verify that the ports have a value of `up` for the “Link” column and a value of `healthy` for the “Health Status” column.

Show example

```
cluster::> network port show -ipspace Cluster
Node: node1

Ignore
                                             Speed(Mbps) Health
Health
Port  IPspace   Broadcast Domain Link  MTU   Admin/Oper  Status
Status
----- --------- ---------------- ----- ----- ----------- -------
-------
e0a   Cluster   Cluster          up    9000  auto/10000  healthy
false
e0b   Cluster   Cluster          up    9000  auto/10000  healthy
false

Node: node2

Ignore
                                             Speed(Mbps) Health
Health
Port  IPspace   Broadcast Domain Link  MTU   Admin/Oper  Status
Status
----- --------- ---------------- ----- ----- ----------- -------
-------
e0a   Cluster   Cluster          up    9000  auto/10000  healthy
false
e0b   Cluster   Cluster          up    9000  auto/10000  healthy
false
4 entries were displayed.
```

3. Confirm that all the cluster LIFs are on their home ports.

   Verify that the “is-home” column is `true` for each of the cluster LIFs:

   `network interface show -vserver Cluster -fields is-home`

Show example

```
cluster::*> net int show -vserver Cluster -fields is-home
(network interface show)
vserver  lif          is-home
-------- ------------ --------
Cluster  node1_clus1  true
Cluster  node1_clus2  true
Cluster  node2_clus1  true
Cluster  node2_clus2  true
4 entries were displayed.
```

If there are cluster LIFs that are not on their home ports, revert those LIFs to their home ports:

```
network interface revert -vserver Cluster -lif *
```

4. Disable auto-revert for the cluster LIFs:

```
network interface modify -vserver Cluster -lif * -auto-revert false
```

5. Verify that all ports listed in the previous step are connected to a network switch:

```
network device-discovery show -port cluster_port
```

The “Discovered Device” column should be the name of the cluster switch that the port is connected to.

Show example

The following example shows that cluster ports "e0a" and "e0b" are correctly connected to cluster switches "cs1" and "cs2".

```
cluster::> network device-discovery show -port e0a|e0b
  (network device-discovery show)
Node/     Local  Discovered
Protocol  Port   Device (LLDP: ChassisID)  Interface  Platform
--------- ------ ------------------------- ---------- ----------
node1/cdp
          e0a    cs1                       0/11       BES-53248
          e0b    cs2                       0/12       BES-53248
node2/cdp
          e0a    cs1                       0/9        BES-53248
          e0b    cs2                       0/9        BES-53248
4 entries were displayed.
```

6. Verify the connectivity of the remote cluster interfaces:

ONTAP 9.9.1 and later

You can use the `network interface check cluster-connectivity` command to start an accessibility check for cluster connectivity and then display the details:

`network interface check cluster-connectivity start` and `network interface check cluster-connectivity show`

```
cluster1::*> network interface check cluster-connectivity start
```

NOTE: Wait for a number of seconds before running the `show` command to display the details.

```
cluster1::*> network interface check cluster-connectivity show
                                  Source           Destination
Packet
Node   Date                       LIF              LIF
Loss
------ -------------------------- ---------------- ----------------
-----------
node1
       3/5/2022 19:21:18 -06:00   node1_clus2      node2-clus1
none
       3/5/2022 19:21:20 -06:00   node1_clus2      node2_clus2
none
node2
       3/5/2022 19:21:18 -06:00   node2_clus2      node1_clus1
none
       3/5/2022 19:21:20 -06:00   node2_clus2      node1_clus2
none
```

All ONTAP releases

For all ONTAP releases, you can also use the `cluster ping-cluster -node <name>` command to check the connectivity:

```
cluster ping-cluster -node <name>
```

```
cluster1::*> cluster ping-cluster -node local
Host is node2
Getting addresses from network interface table...
Cluster node1_clus1 169.254.209.69 node1 e0a
Cluster node1_clus2 169.254.49.125 node1 e0b
Cluster node2_clus1 169.254.47.194 node2 e0a
Cluster node2_clus2 169.254.19.183 node2 e0b
Local = 169.254.47.194 169.254.19.183
Remote = 169.254.209.69 169.254.49.125
Cluster Vserver Id = 4294967293
Ping status:

Basic connectivity succeeds on 4 path(s)
Basic connectivity fails on 0 path(s)

Detected 9000 byte MTU on 4 path(s):
Local 169.254.47.194 to Remote 169.254.209.69
Local 169.254.47.194 to Remote 169.254.49.125
Local 169.254.19.183 to Remote 169.254.209.69
Local 169.254.19.183 to Remote 169.254.49.125
Larger than PMTU communication succeeds on 4 path(s)
RPC status:
2 paths up, 0 paths down (tcp check)
2 paths up, 0 paths down (udp check)
```

7. Verify that the cluster is healthy:

   ```
   cluster ring show
   ```

   All units must be either master or secondary.

8. Set up the switchless configuration for the ports in group 1.

   To avoid potential networking issues, you must disconnect the ports from group1 and reconnect them back-to-back as quickly as possible, for example, **in less than 20 seconds**.

   a. Disconnect all the cables from the ports in group1 at the same time.

      In the following example, the cables are disconnected from port "e0a" on each node, and cluster traffic continues through the switch and port "e0b" on each node:

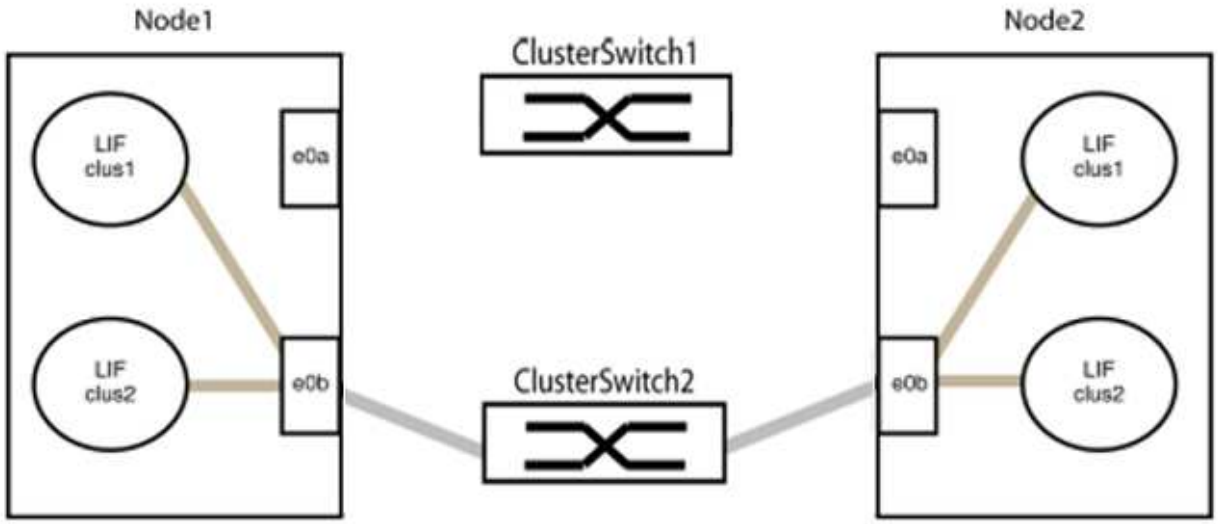

b. Cable the ports in group1 back-to-back.

In the following example, "e0a" on node1 is connected to "e0a" on node2:

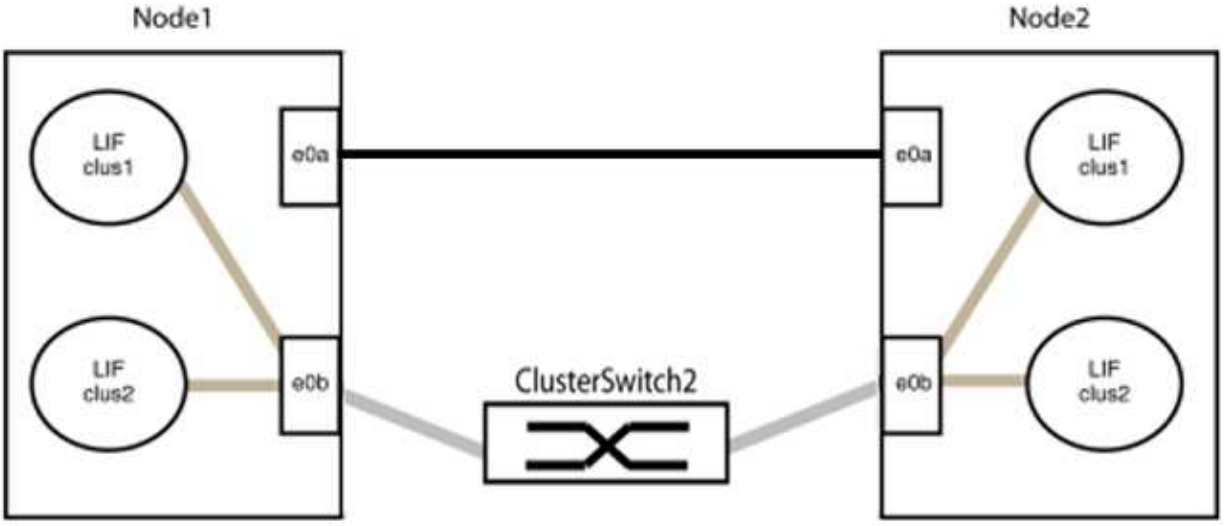

9. The switchless cluster network option transitions from `false` to `true`. This might take up to 45 seconds. Confirm that the switchless option is set to `true`:

```
network options switchless-cluster show
```

The following example shows that the switchless cluster is enabled:

```
cluster::*> network options switchless-cluster show
Enable Switchless Cluster: true
```

10. Verify the connectivity of the remote cluster interfaces:

ONTAP 9.9.1 and later

You can use the `network interface check cluster-connectivity` command to start an accessibility check for cluster connectivity and then display the details:

`network interface check cluster-connectivity start` and `network interface check cluster-connectivity show`

```
cluster1::*> network interface check cluster-connectivity start
```

NOTE: Wait for a number of seconds before running the `show` command to display the details.

```
cluster1::*> network interface check cluster-connectivity show
                                  Source           Destination
Packet
Node   Date                       LIF              LIF
Loss
------ -------------------------- ---------------- ----------------
-----------
node1
       3/5/2022 19:21:18 -06:00   node1_clus2      node2-clus1
none
       3/5/2022 19:21:20 -06:00   node1_clus2      node2_clus2
none
node2
       3/5/2022 19:21:18 -06:00   node2_clus2      node1_clus1
none
       3/5/2022 19:21:20 -06:00   node2_clus2      node1_clus2
none
```

All ONTAP releases

For all ONTAP releases, you can also use the `cluster ping-cluster -node <name>` command to check the connectivity:

```
cluster ping-cluster -node <name>
```

```
cluster1::*> cluster ping-cluster -node local
Host is node2
Getting addresses from network interface table...
Cluster node1_clus1 169.254.209.69 node1 e0a
Cluster node1_clus2 169.254.49.125 node1 e0b
Cluster node2_clus1 169.254.47.194 node2 e0a
Cluster node2_clus2 169.254.19.183 node2 e0b
Local = 169.254.47.194 169.254.19.183
Remote = 169.254.209.69 169.254.49.125
Cluster Vserver Id = 4294967293
Ping status:

Basic connectivity succeeds on 4 path(s)
Basic connectivity fails on 0 path(s)

Detected 9000 byte MTU on 4 path(s):
Local 169.254.47.194 to Remote 169.254.209.69
Local 169.254.47.194 to Remote 169.254.49.125
Local 169.254.19.183 to Remote 169.254.209.69
Local 169.254.19.183 to Remote 169.254.49.125
Larger than PMTU communication succeeds on 4 path(s)
RPC status:
2 paths up, 0 paths down (tcp check)
2 paths up, 0 paths down (udp check)
```

Before proceeding to the next step, you must wait at least two minutes to confirm a working back-to-back connection on group 1.

11. Set up the switchless configuration for the ports in group 2.

To avoid potential networking issues, you must disconnect the ports from group2 and reconnect them back-to-back as quickly as possible, for example, **in less than 20 seconds**.

a. Disconnect all the cables from the ports in group2 at the same time.

In the following example, the cables are disconnected from port "e0b" on each node, and cluster traffic continues through the direct connection between the "e0a" ports:

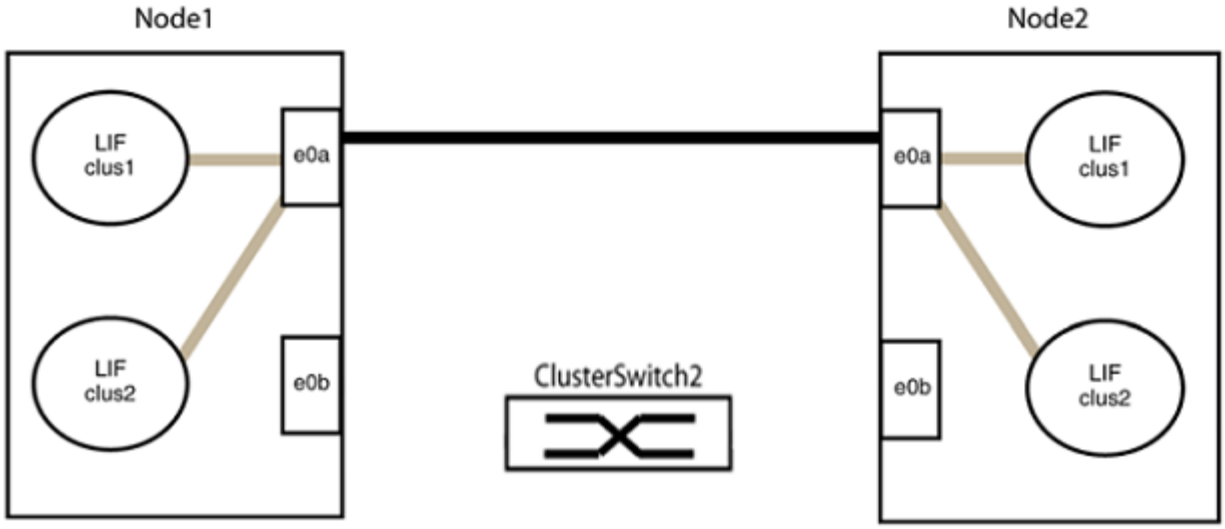

b. Cable the ports in group2 back-to-back.

   In the following example, "e0a" on node1 is connected to "e0a" on node2 and "e0b" on node1 is connected to "e0b" on node2:

Step 3: Verify the configuration

1. Verify that the ports on both nodes are correctly connected:

   `network device-discovery show -port cluster_port`

Show example

The following example shows that cluster ports "e0a" and "e0b" are correctly connected to the corresponding port on the cluster partner:

```
cluster::> net device-discovery show -port e0a|e0b
  (network device-discovery show)
Node/      Local  Discovered
Protocol   Port   Device (LLDP: ChassisID)  Interface  Platform
---------- ------ ------------------------- ---------- ----------
node1/cdp
           e0a    node2                     e0a        AFF-A300
           e0b    node2                     e0b        AFF-A300
node1/lldp
           e0a    node2 (00:a0:98:da:16:44) e0a        -
           e0b    node2 (00:a0:98:da:16:44) e0b        -
node2/cdp
           e0a    node1                     e0a        AFF-A300
           e0b    node1                     e0b        AFF-A300
node2/lldp
           e0a    node1 (00:a0:98:da:87:49) e0a        -
           e0b    node1 (00:a0:98:da:87:49) e0b        -
8 entries were displayed.
```

2. Re-enable auto-revert for the cluster LIFs:

   `network interface modify -vserver Cluster -lif * -auto-revert true`

3. Verify that all LIFs are home. This might take a few seconds.

   `network interface show -vserver Cluster -lif` *`lif_name`*

Show example

The LIFs have been reverted if the “Is Home” column is `true`, as shown for `node1_clus2` and `node2_clus2` in the following example:

```
cluster::> network interface show -vserver Cluster -fields curr-
port,is-home
vserver  lif           curr-port is-home
-------- ------------- --------- -------
Cluster  node1_clus1   e0a       true
Cluster  node1_clus2   e0b       true
Cluster  node2_clus1   e0a       true
Cluster  node2_clus2   e0b       true
4 entries were displayed.
```

If any cluster LIFS have not returned to their home ports, revert them manually from the local node:

`network interface revert -vserver Cluster -lif` *`lif_name`*

4. Check the cluster status of the nodes from the system console of either node:

   `cluster show`

   Show example

   The following example shows epsilon on both nodes to be `false`:

   ```
   Node  Health  Eligibility Epsilon
   ----- ------- ----------- --------
   node1 true    true        false
   node2 true    true        false
   2 entries were displayed.
   ```

5. Verify the connectivity of the remote cluster interfaces:

ONTAP 9.9.1 and later

You can use the `network interface check cluster-connectivity` command to start an accessibility check for cluster connectivity and then display the details:

`network interface check cluster-connectivity start` and `network interface check cluster-connectivity show`

```
cluster1::*> network interface check cluster-connectivity start
```

NOTE: Wait for a number of seconds before running the `show` command to display the details.

```
cluster1::*> network interface check cluster-connectivity show
                                  Source           Destination
Packet
Node   Date                       LIF              LIF
Loss
------ -------------------------- ---------------- ----------------
-----------
node1
       3/5/2022 19:21:18 -06:00   node1_clus2      node2-clus1
none
       3/5/2022 19:21:20 -06:00   node1_clus2      node2_clus2
none
node2
       3/5/2022 19:21:18 -06:00   node2_clus2      node1_clus1
none
       3/5/2022 19:21:20 -06:00   node2_clus2      node1_clus2
none
```

All ONTAP releases

For all ONTAP releases, you can also use the `cluster ping-cluster -node <name>` command to check the connectivity:

```
cluster ping-cluster -node <name>
```

```
cluster1::*> cluster ping-cluster -node local
Host is node2
Getting addresses from network interface table...
Cluster node1_clus1 169.254.209.69 node1 e0a
Cluster node1_clus2 169.254.49.125 node1 e0b
Cluster node2_clus1 169.254.47.194 node2 e0a
Cluster node2_clus2 169.254.19.183 node2 e0b
Local = 169.254.47.194 169.254.19.183
Remote = 169.254.209.69 169.254.49.125
Cluster Vserver Id = 4294967293
Ping status:

Basic connectivity succeeds on 4 path(s)
Basic connectivity fails on 0 path(s)

Detected 9000 byte MTU on 4 path(s):
Local 169.254.47.194 to Remote 169.254.209.69
Local 169.254.47.194 to Remote 169.254.49.125
Local 169.254.19.183 to Remote 169.254.209.69
Local 169.254.19.183 to Remote 169.254.49.125
Larger than PMTU communication succeeds on 4 path(s)
RPC status:
2 paths up, 0 paths down (tcp check)
2 paths up, 0 paths down (udp check)
```

6. If you suppressed automatic case creation, reenable it by invoking an AutoSupport message:

   ```
   system node autosupport invoke -node * -type all -message MAINT=END
   ```

   For more information, see NetApp KB Article 1010449: How to suppress automatic case creation during scheduled maintenance windows.

7. Change the privilege level back to admin:

   ```
   set -privilege admin
   ```

Cisco Nexus 92300YC

Get started

Installation and setup workflow for Cisco Nexus 92300YC switches

Cisco Nexus 92300YC switches can be used as cluster switches in your AFF or FAS cluster. Cluster switches allow you to build ONTAP clusters with more than two nodes.

Follow these workflow steps to install and setup your to Cisco Nexus 92300YC switch.

1 Configuration requirements

Review the configuration requirements for the 92300YC cluster switch.

2 Required documentation

Review specific switch and controller documentation to set up your 92300YC switches and the ONTAP cluster.

3 Smart Call Home requirements

Review the requirements for the Cisco Smart Call Home feature, used to monitor the hardware and software components on your network.

4 Install the hardware

Install the switch hardware.

5 Configure the software

Configure the switch software.

Configuration requirements for Cisco Nexus 92300YC switches

For Cisco Nexus 92300YC switch installation and maintenance, be sure to review all configuration and network requirements.

If you want to build ONTAP clusters with more than two nodes, you need two supported cluster network switches. You can use additional management switches, which are optional.

Configuration requirements

To configure your cluster, you need the appropriate number and type of cables and cable connectors for your switches. Depending on the type of switch you are initially configuring, you need to connect to the switch console port with the included console cable; you also need to provide specific network information.

Network requirements

You need the following network information for all switch configurations:

- IP subnet for management network traffic
- Host names and IP addresses for each of the storage system controllers and all applicable switches
- Most storage system controllers are managed through the e0M interface by connecting to the Ethernet service port (wrench icon). On AFF A800 and AFF A700 systems, the e0M interface uses a dedicated Ethernet port.

Refer to the Hardware Universe for latest information. See What additional information do I need to install my equipment that is not in HWU? for more information about switch installation requirements.

What's next

After you've reviewed the configuration requirements, you can confirm your components and part numbers.

Components and part numbers for Cisco Nexus 92300YC switches

For Cisco Nexus 92300YC switch installation and maintenance, be sure to review all switch components and part numbers. See the Hardware Universe for details. See What additional information do I need to install my equipment that is not in HWU? for more information about switch installation requirements.

The following table lists the part number and description for the 92300YC switch, fans, and power supplies:

Part number	Description
190003	Cisco 92300YC, CLSW, 48Pt10/25GB, 18Pt100G, PTSX (PTSX = Port Side Exhaust)
190003R	Cisco 92300YC, CLSW, 48Pt10/25GB, 18Pt100G, PSIN (PSIN = Port Side Intake)
X-NXA-FAN-35CFM-B	Fan, Cisco N9K port side intake airflow
X-NXA-FAN-35CFM-F	Fan, Cisco N9K port side exhaust airflow
X-NXA-PAC-650W-B	Power supply, Cisco 650W - port side intake
X-NXA-PAC-650W-F	Power supply, Cisco 650W - port side exhaust

Cisco Nexus 92300YC switch airflow details:

- Port-side exhaust airflow (standard air) — Cool air enters the chassis through the fan and power supply modules in the cold aisle and exhausts through the port end of the chassis in the hot aisle. Port-side exhaust airflow with blue coloring.
- Port-side intake airflow (reverse air) — Cool air enters the chassis through the port end in the cold aisle and exhausts through the fan and power supply modules in the hot aisle. Port-side intake airflow with burgundy coloring.

What's next

After you've confirmed your components and part numbers, you can review the required documentation.

Documentation requirements for Cisco Nexus 92300YC switches

For Cisco Nexus 92300YC switch installation and maintenance, be sure to review all the recommended documentation.

Switch documentation

To set up the Cisco Nexus 92300YC switches, you need the following documentation from the Cisco Nexus 9000 Series Switches Support page:

Document title	Description
Nexus 9000 Series Hardware Installation Guide	Provides detailed information about site requirements, switch hardware details, and installation options.
Cisco Nexus 9000 Series Switch Software Configuration Guides (choose the guide for the NX-OS release installed on your switches)	Provides initial switch configuration information that you need before you can configure the switch for ONTAP operation.
Cisco Nexus 9000 Series NX-OS Software Upgrade and Downgrade Guide (choose the guide for the NX-OS release installed on your switches)	Provides information on how to downgrade the switch to ONTAP supported switch software, if necessary.
Cisco Nexus 9000 Series NX-OS Command Reference Master Index	Provides links to the various command references provided by Cisco.
Cisco Nexus 9000 MIBs Reference	Describes the Management Information Base (MIB) files for the Nexus 9000 switches.
Nexus 9000 Series NX-OS System Message Reference	Describes the system messages for Cisco Nexus 9000 series switches, those that are informational, and others that might help diagnose problems with links, internal hardware, or the system software.
Cisco Nexus 9000 Series NX-OS Release Notes (choose the notes for the NX-OS release installed on your switches)	Describes the features, bugs, and limitations for the Cisco Nexus 9000 Series.
Regulatory Compliance and Safety Information for Cisco Nexus 9000 Series	Provides international agency compliance, safety, and statutory information for the Nexus 9000 series switches.

ONTAP systems documentation

To set up an ONTAP system, you need the following documents for your version of the operating system from ONTAP 9.

Name	Description
Controller-specific *Installation and Setup Instructions*	Describes how to install NetApp hardware.
ONTAP documentation	Provides detailed information about all aspects of the ONTAP releases.
Hardware Universe	Provides NetApp hardware configuration and compatibility information.

Rail kit and cabinet documentation

To install a Cisco Nexus 92300YC switch in a NetApp cabinet, see the following hardware documentation.

Name	Description
42U System Cabinet, Deep Guide	Describes the FRUs associated with the 42U system cabinet, and provides maintenance and FRU replacement instructions.
Install a Cisco Nexus 92300YC switch in a NetApp Cabinet	Describes how to install a Cisco Nexus 92300YC switch in a four-post NetApp cabinet.

Smart Call Home requirements

To use Smart Call Home, you must configure a cluster network switch to communicate using email with the Smart Call Home system. In addition, you can optionally set up your cluster network switch to take advantage of Cisco's embedded Smart Call Home support feature.

Smart Call Home monitors the hardware and software components on your network. When a critical system configuration occurs, it generates an email-based notification and raises an alert to all the recipients that are configured in your destination profile.

Smart Call Home monitors the hardware and software components on your network. When a critical system configuration occurs, it generates an email-based notification and raises an alert to all the recipients that are configured in your destination profile.

Before you can use Smart Call Home, be aware of the following requirements:

- An email server must be in place.
- The switch must have IP connectivity to the email server.
- The contact name (SNMP server contact), phone number, and street address information must be configured. This is required to determine the origin of messages received.
- A CCO ID must be associated with an appropriate Cisco SMARTnet Service contract for your company.
- Cisco SMARTnet Service must be in place for the device to be registered.

The Cisco support site contains information about the commands to configure Smart Call Home.

Install hardware

Hardware install workflow for Cisco Nexus 92300YC switches

To install and configure the hardware for a 92300YC cluster switch, follow these steps:

1. **Complete the cabling worksheet**

The sample cabling worksheet provides examples of recommended port assignments from the switches to the controllers. The blank worksheet provides a template that you can use in setting up your cluster.

2 Install the switch

Install the 92300YC switch.

3 Install the switch in a NetApp cabinet

Install the 92300YC switch and pass-through panel in a NetApp cabinet as required.

4 Review cabling and configuration

Review support for NVIDIA Ethernet ports.

Complete Cisco Nexus 92300YC cabling worksheet

If you want to document the supported platforms, download a PDF of this page and complete the cabling worksheet.

The sample cabling worksheet provides examples of recommended port assignments from the switches to the controllers. The blank worksheet provides a template that you can use in setting up your cluster.

Sample cabling worksheet

The sample port definition on each pair of switches is as follows:

Cluster switch A		Cluster switch B	
Switch port	Node and port usage	Switch port	Node and port usage
1	10/25 GbE node	1	10/25 GbE node
2	10/25 GbE node	2	10/25 GbE node
3	10/25 GbE node	3	10/25 GbE node
4	10/25 GbE node	4	10/25 GbE node
5	10/25 GbE node	5	10/25 GbE node
6	10/25 GbE node	6	10/25 GbE node
7	10/25 GbE node	7	10/25 GbE node
8	10/25 GbE node	8	10/25 GbE node
9	10/25 GbE node	9	10/25 GbE node
10	10/25 GbE node	10	10/25 GbE node

Cluster switch A		Cluster switch B	
11	10/25 GbE node	11	10/25 GbE node
12	10/25 GbE node	12	10/25 GbE node
13	10/25 GbE node	13	10/25 GbE node
14	10/25 GbE node	14	10/25 GbE node
15	10/25 GbE node	15	10/25 GbE node
16	10/25 GbE node	16	10/25 GbE node
17	10/25 GbE node	17	10/25 GbE node
18	10/25 GbE node	18	10/25 GbE node
19	10/25 GbE node	19	10/25 GbE node
20	10/25 GbE node	20	10/25 GbE node
21	10/25 GbE node	21	10/25 GbE node
22	10/25 GbE node	22	10/25 GbE node
23	10/25 GbE node	23	10/25 GbE node
24	10/25 GbE node	24	10/25 GbE node
25	10/25 GbE node	25	10/25 GbE node
26	10/25 GbE node	26	10/25 GbE node
27	10/25 GbE node	27	10/25 GbE node
28	10/25 GbE node	28	10/25 GbE node
29	10/25 GbE node	29	10/25 GbE node
30	10/25 GbE node	30	10/25 GbE node
31	10/25 GbE node	31	10/25 GbE node
32	10/25 GbE node	32	10/25 GbE node

Cluster switch A		Cluster switch B	
33	10/25 GbE node	33	10/25 GbE node
34	10/25 GbE node	34	10/25 GbE node
35	10/25 GbE node	35	10/25 GbE node
36	10/25 GbE node	36	10/25 GbE node
37	10/25 GbE node	37	10/25 GbE node
38	10/25 GbE node	38	10/25 GbE node
39	10/25 GbE node	39	10/25 GbE node
40	10/25 GbE node	40	10/25 GbE node
41	10/25 GbE node	41	10/25 GbE node
42	10/25 GbE node	42	10/25 GbE node
43	10/25 GbE node	43	10/25 GbE node
44	10/25 GbE node	44	10/25 GbE node
45	10/25 GbE node	45	10/25 GbE node
46	10/25 GbE node	46	10/25 GbE node
47	10/25 GbE node	47	10/25 GbE node
48	10/25 GbE node	48	10/25 GbE node
49	40/100 GbE node	49	40/100 GbE node
50	40/100 GbE node	50	40/100 GbE node
51	40/100 GbE node	51	40/100 GbE node
52	40/100 GbE node	52	40/100 GbE node
53	40/100 GbE node	53	40/100 GbE node
54	40/100 GbE node	54	40/100 GbE node

Cluster switch A		Cluster switch B	
55	40/100 GbE node	55	40/100 GbE node
56	40/100 GbE node	56	40/100 GbE node
57	40/100 GbE node	57	40/100 GbE node
58	40/100 GbE node	58	40/100 GbE node
59	40/100 GbE node	59	40/100 GbE node
60	40/100 GbE node	60	40/100 GbE node
61	40/100 GbE node	61	40/100 GbE node
62	40/100 GbE node	62	40/100 GbE node
63	40/100 GbE node	63	40/100 GbE node
64	40/100 GbE node	64	40/100 GbE node
65	100 GbE ISL to switch B port 65	65	100 GbE ISL to switch A port 65
66	100 GbE ISL to switch B port 66	66	100 GbE ISL to switch A port 65

Blank cabling worksheet

You can use the blank cabling worksheet to document the platforms that are supported as nodes in a cluster. The *Supported Cluster Connections* section of the Hardware Universe defines the cluster ports used by the platform.

Cluster switch A		Cluster switch B	
Switch port	Node/port usage	Switch port	Node/port usage
1		1	
2		2	
3		3	
4		4	
5		5	

Cluster switch A		Cluster switch B	
6		6	
7		7	
8		8	
9		9	
10		10	
11		11	
12		12	
13		13	
14		14	
15		15	
16		16	
17		17	
18		18	
19		19	
20		20	
21		21	
22		22	
23		23	
24		24	
25		25	
26		26	
27		27	

Cluster switch A		Cluster switch B	
28		28	
29		29	
30		30	
31		31	
32		32	
33		33	
34		34	
35		35	
36		36	
37		37	
38		38	
39		39	
40		40	
41		41	
42		42	
43		43	
44		44	
45		45	
46		46	
47		47	
48		48	
49		49	

Cluster switch A		Cluster switch B	
50		50	
51		51	
52		52	
53		53	
54		54	
55		55	
56		56	
57		57	
58		58	
59		59	
60		60	
61		61	
62		62	
63		63	
64		64	
65	ISL to switch B port 65	65	ISL to switch A port 65
66	ISL to switch B port 66	66	ISL to switch A port 66

What's next

After you've completed your cabling worksheets, you can install the switch.

Install the 92300YC cluster switch

Follow this procedure to set up and configure the Cisco Nexus 92300YC switch.

Before you begin

Make sure you have the following:

- Access to an HTTP, FTP, or TFTP server at the installation site to download the applicable NX-OS and Reference Configuration File (RCF) releases.
- Applicable NX-OS version, downloaded from the Cisco Software Download page.
- Applicable licenses, network and configuration information, and cables.
- Completed cabling worksheets.
- Applicable NetApp cluster network and management network RCFs downloaded from the NetApp Support Site at mysupport.netapp.com. All Cisco cluster network and management network switches arrive with the standard Cisco factory-default configuration. These switches also have the current version of the NX-OS software but do not have the RCFs loaded.
- Required switch and ONTAP documentation.

Steps

1. Rack the cluster network and management network switches and controllers.

If you are installing the…	Then…
Cisco Nexus 92300YC in a NetApp system cabinet	See the *Installing a Cisco Nexus 92300YC cluster switch and pass-through panel in a NetApp cabinet* guide for instructions to install the switch in a NetApp cabinet.
Equipment in a Telco rack	See the procedures provided in the switch hardware installation guides and the NetApp installation and setup instructions.

2. Cable the cluster network and management network switches to the controllers using the completed cabling worksheets.
3. Power on the cluster network and management network switches and controllers.

What's next?

Optionally, you can install a Cisco Nexus 3223C switch in a NetApp cabinet. Otherwise, go to Review cabling and configuration.

Install a Cisco Nexus 92300YC cluster switch in a NetApp cabinet

Depending on your configuration, you might need to install the Cisco Nexus 92300YC cluster switch and pass-through panel in a NetApp cabinet with the standard brackets that are included with the switch.

Before you begin

- The initial preparation requirements, kit contents, and safety precautions in the Cisco Nexus 9000 Series Hardware Installation Guide.
- For each switch, the eight 10-32 or 12-24 screws and clip nuts to mount the brackets and slider rails to the front and rear cabinet posts.
- Cisco standard rail kit to install the switch in a NetApp cabinet.

The jumper cords are not included with the pass-through kit and should be included with your switches. If they were not shipped with the switches, you can order them from NetApp (part number X1558A-R6).

Steps

1. Install the pass-through blanking panel in the NetApp cabinet.

   The pass-through panel kit is available from NetApp (part number X8784-R6).

   The NetApp pass-through panel kit contains the following hardware:

   - One pass-through blanking panel
   - Four 10-32 x .75 screws
   - Four 10-32 clip nuts

     a. Determine the vertical location of the switches and blanking panel in the cabinet.

        In this procedure, the blanking panel will be installed in U40.

     b. Install two clip nuts on each side in the appropriate square holes for front cabinet rails.

     c. Center the panel vertically to prevent intrusion into adjacent rack space, and then tighten the screws.

     d. Insert the female connectors of both 48-inch jumper cords from the rear of the panel and through the brush assembly.

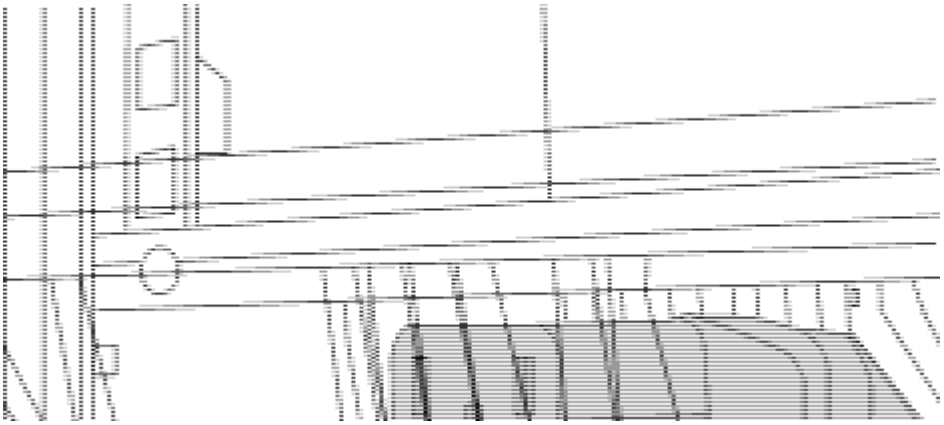

(1) Female connector of the jumper cord.

1. Install the rack-mount brackets on the Nexus 92300YC switch chassis.

   a. Position a front rack-mount bracket on one side of the switch chassis so that the mounting ear is aligned with the chassis faceplate (on the PSU or fan side), and then use four M4 screws to attach the bracket to the chassis.

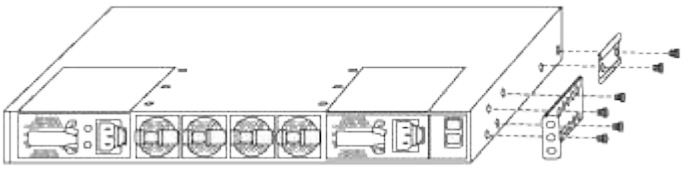

   b. Repeat step 2a with the other front rack-mount bracket on the other side of the switch.

   c. Install the rear rack-mount bracket on the switch chassis.

   d. Repeat step 2c with the other rear rack-mount bracket on the other side of the switch.

2. Install the clip nuts in the square hole locations for all four IEA posts.

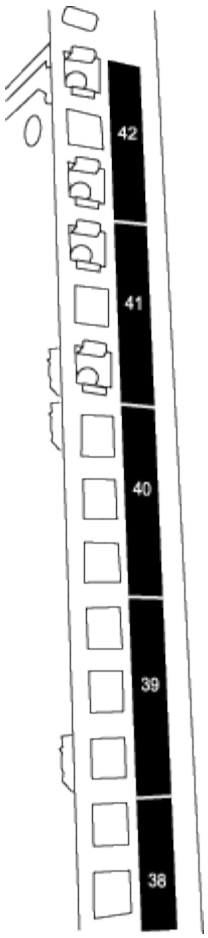

The two 92300YC switches will always be mounted in the top 2U of the cabinet RU41 and 42.

3. Install the slider rails in the cabinet.
   a. Position the first slider rail at the RU42 mark on the back side of the rear left post, insert screws with the matching thread type, and then tighten the screws with your fingers.

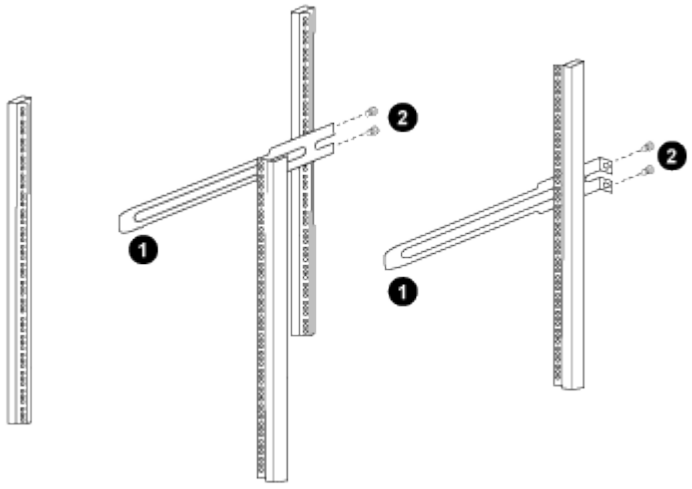

(1) As you gently slide the slider rail, align it to the screw holes in the rack.

(2) Tighten the screws of the slider rails to the cabinet posts.

   b. Repeat step 4a for the right side rear post.

c. Repeat steps 4a and 4b at the RU41 locations on the cabinet.

4. Install the switch in the cabinet.

> This step requires two people: one person to support the switch from the front and another to guide the switch into the rear slider rails.

a. Position the back of the switch at RU41.

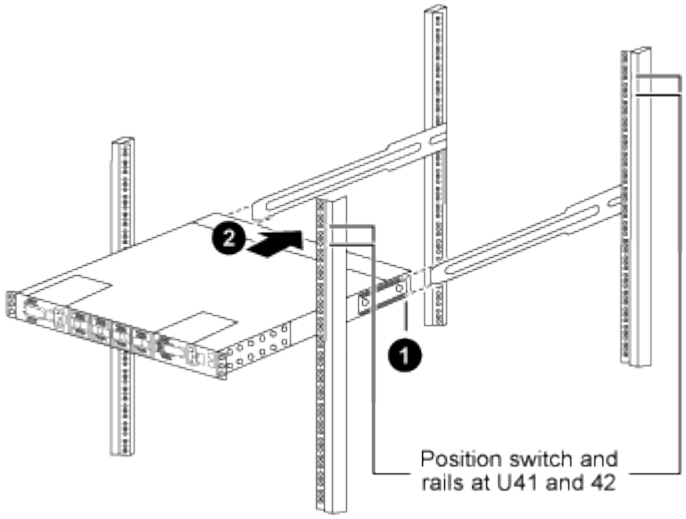

(1) As the chassis is pushed toward the rear posts, align the two rear rack-mount guides with the slider rails.

(2) Gently slide the switch until the front rack-mount brackets are flush with the front posts.

b. Attach the switch to the cabinet.

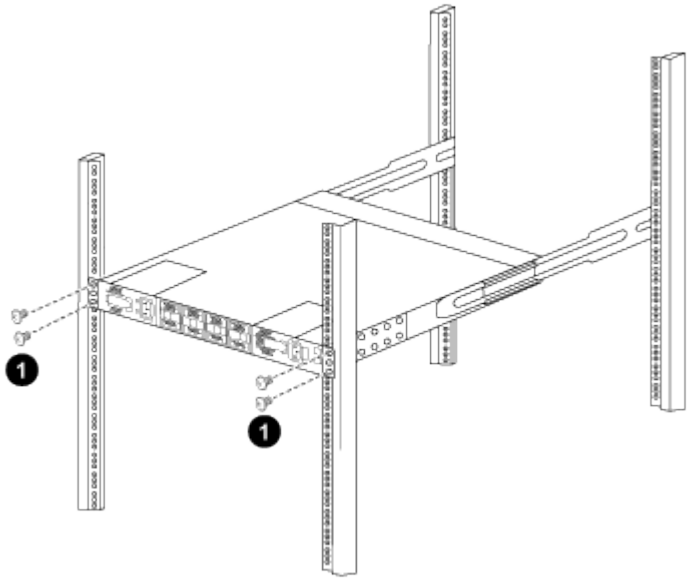

(1) With one person holding the front of the chassis level, the other person should fully tighten the four rear screws to the cabinet posts.

c. With the chassis now supported without assistance, fully tighten the front screws to the posts.

d. Repeat steps 5a through 5c for the second switch at the RU42 location.

> By using the fully installed switch as a support, it is not necessary to hold the front of the second switch during the installation process.

5. When the switches are installed, connect the jumper cords to the switch power inlets.
6. Connect the male plugs of both jumper cords to the closest available PDU outlets.

> To maintain redundancy, the two cords must be connected to different PDUs.

7. Connect the management port on each 92300YC switch to either of the management switches (if ordered) or connect them directly to your management network.

   The management port is the upper-right port located on the PSU side of the switch. The CAT6 cable for each switch needs to be routed through the pass-through panel after the switches are installed to connect to the management switches or management network.

What's next

After you've installed the switches in the NetApp cabinet, you can configure the switch.

Review cabling and configuration considerations

Before configuring your Cisco 92300YC switch, review the following considerations.

Support for NVIDIA CX6, CX6-DX, and CX7 Ethernet ports

If connecting a switch port to an ONTAP controller using NVIDIA ConnectX-6 (CX6), ConnectX-6 Dx (CX6-DX), or ConnectX-7 (CX7) NIC ports, you must hard-code the switch port speed.

```
(cs1)(config)# interface Ethernet1/19
For 100GbE speed:
(cs1)(config-if)# speed 100000
For 40GbE speed:
(cs1)(config-if)# speed 40000
(cs1)(config-if)# no negotiate auto
(cs1)(config-if)# exit
(cs1)(config)# exit
Save the changes:
(cs1)# copy running-config startup-config
```

See the Hardware Universe for more information on switch ports. See What additional information do I need to install my equipment that is not in HWU? for more information about switch installation requirements.

Configure the software

Software install workflow for Cisco Nexus 92300YC cluster switches

To install and configure the software for a Cisco Nexus 92300YC switch and to install or

upgrade the Reference Configuration File (RCF), follow these steps:

1. **Configure the switch**

Configure the 92300YC cluster switch.

2. **Prepare to install the NX-OS software and RCF**

The Cisco NX-OS software and reference configuration files (RCFs) must be installed on Cisco 92300YC cluster switches.

3. **Install or upgrade the NX-OS software**

Download and install or upgrade the NX-OS software on the Cisco 392300YC cluster switch.

4. **Install the RCF**

Install the RCF after setting up the Cisco 92300YC switch for the first time.

5. **Verify SSH configuration**

Verify SSH is enabled on the switches to use the Ethernet Switch Health Monitor (CSHM) and log collection features.

Configure the Cisco Nexus 92300YC switch

Follow this procedure to set up and configure the Cisco Nexus 92300YC switch.

Steps

1. Connect the serial port to a host or serial port.
2. Connect the management port (on the non-port side of the switch) to the same network where your SFTP server is located.
3. At the console, set the host side serial settings:
   - 9600 baud
   - 8 data bits
   - 1 stop bit
   - parity: none
   - flow control: none
4. When booting for the first time or rebooting after erasing the running configuration, the Nexus 92300YC switch loops in a boot cycle. Interrupt this cycle by typing **yes** to abort Power on Auto Provisioning.

   The System Admin Account setup is displayed.

Show example

```
$ VDC-1 %$ %POAP-2-POAP_INFO:   - Abort Power On Auto Provisioning
[yes - continue with normal setup, skip - bypass password and basic
configuration, no - continue with Power On Auto Provisioning]
(yes/skip/no)[no]: y
Disabling POAP.......Disabling POAP
2019 Apr 10 00:36:17 switch %$ VDC-1 %$ poap: Rolling back, please
wait... (This may take 5-15 minutes)

          ---- System Admin Account Setup ----

Do you want to enforce secure password standard (yes/no) [y]:
```

5. Type **y** to enforce secure password standard:

```
Do you want to enforce secure password standard (yes/no) [y]: y
```

6. Enter and confirm the password for user admin:

```
Enter the password for "admin":
Confirm the password for "admin":
```

7. Type **yes** to enter the Basic System Configuration dialog.

Show example

```
This setup utility will guide you through the basic configuration of
the system. Setup configures only enough connectivity for management
of the system.

Please register Cisco Nexus9000 Family devices promptly with your
supplier. Failure to register may affect response times for initial
service calls. Nexus9000 devices must be registered to receive
entitled support services.

Press Enter at anytime to skip a dialog. Use ctrl-c at anytime
to skip the remaining dialogs.

Would you like to enter the basic configuration dialog (yes/no):
```

8. Create another login account:

```
Create another login account (yes/no) [n]:
```

9. Configure read-only and read-write SNMP community strings:

```
Configure read-only SNMP community string (yes/no) [n]:

Configure read-write SNMP community string (yes/no) [n]:
```

10. Configure the cluster switch name:

```
Enter the switch name : cs2
```

11. Configure the out-of-band management interface:

```
Continue with Out-of-band (mgmt0) management configuration? (yes/no)
[y]: y

Mgmt0 IPv4 address : 172.22.133.216

Mgmt0 IPv4 netmask : 255.255.224.0

Configure the default gateway? (yes/no) [y]: y

IPv4 address of the default gateway : 172.22.128.1
```

12. Configure advanced IP options:

```
Configure advanced IP options? (yes/no) [n]: n
```

13. Configure Telnet services:

```
Enable the telnet service? (yes/no) [n]: n
```

14. Configure SSH services and SSH keys:

```
Enable the ssh service? (yes/no) [y]: y

       Type of ssh key you would like to generate (dsa/rsa) [rsa]: rsa

       Number of rsa key bits <1024-2048> [1024]: 2048
```

15. Configure other settings:

```
Configure the ntp server? (yes/no) [n]: n

  Configure default interface layer (L3/L2) [L2]: L2

  Configure default switchport interface state (shut/noshut) [noshut]:
noshut

  Configure CoPP system profile (strict/moderate/lenient/dense)
[strict]: strict
```

16. Confirm switch information and save the configuration:

```
Would you like to edit the configuration? (yes/no) [n]: n

Use this configuration and save it? (yes/no) [y]: y

[] 100%
Copy complete, now saving to disk (please wait)...
Copy complete.
```

What's next?

After you've configured your switches, you can prepare to install the NX-OS software and RCF.

Prepare to install NX-OS software and Reference Configuration File (RCF)

Before you install the NX-OS software and the Reference Configuration File (RCF), follow this procedure.

Before you begin

Make sure you have the following:

- A fully functioning cluster (no errors in the logs or similar issues).
- Appropriate software and upgrade guides, which are available from Cisco Nexus 9000 Series Switches.

About the examples

The examples in this procedure use two nodes. These nodes use two 10GbE cluster interconnect ports `e0a` and `e0b`. See the Hardware Universe to verify the correct cluster ports on your platforms.

The examples in this procedure use the following switch and node nomenclature:

- The names of the two Cisco switches are `cs1` and `cs2`.
- The node names are `node1` and `node2`.
- The cluster LIF names are `node1_clus1` and `node1_clus2` for node1 and `node2_clus1` and `node2_clus2` for node2.
- The `cluster1::*>` prompt indicates the name of the cluster.

About this task

The procedure requires the use of both ONTAP commands and Cisco Nexus 9000 Series Switches commands; ONTAP commands are used unless otherwise indicated. The command outputs might vary depending on different releases of ONTAP.

Steps

1. Change the privilege level to advanced, entering **y** when prompted to continue:

   ```
   set -privilege advanced
   ```

   The advanced prompt (`*>`) appears.

2. If AutoSupport is enabled on this cluster, suppress automatic case creation by invoking an AutoSupport message:

   ```
   system node autosupport invoke -node * -type all -message MAINT=xh
   ```

   where *x* is the duration of the maintenance window in hours.

   > The AutoSupport message notifies technical support of this maintenance task so that automatic case creation is suppressed during the maintenance window.

   The following command suppresses automatic case creation for two hours:

   ```
   cluster1:> **system node autosupport invoke -node * -type all -message
   MAINT=2h**
   ```

3. Display how many cluster interconnect interfaces are configured in each node for each cluster interconnect switch: `network device-discovery show -protocol cdp`

Show example

```
cluster1::*> network device-discovery show -protocol cdp

 Node/      Local  Discovered
Protocol    Port   Device (LLDP: ChassisID)  Interface
Platform
----------- ------ ------------------------- ----------------
----------------
node2      /cdp
            e0a    cs1                       Eth1/2            N9K-
C92300YC
            e0b    cs2                       Eth1/2            N9K-
C92300YC
node1      /cdp
            e0a    cs1                       Eth1/1            N9K-
C92300YC
            e0b    cs2                       Eth1/1            N9K-
C92300YC

4 entries were displayed.
```

4. Check the administrative or operational status of each cluster interface.
   a. Display the network port attributes: `network port show -ipspace Cluster`

Show example

```
cluster1::*> network port show -ipspace Cluster

Node: node2
                                                        Speed(Mbps)
Health
Port      IPspace      Broadcast Domain Link MTU  Admin/Oper
Status
--------- ------------ ---------------- ---- ---- -----------
--------
e0a       Cluster      Cluster          up   9000  auto/10000
healthy
e0b       Cluster      Cluster          up   9000  auto/10000
healthy

Node: node1
                                                        Speed(Mbps)
Health
Port      IPspace      Broadcast Domain Link MTU  Admin/Oper
Status
--------- ------------ ---------------- ---- ---- -----------
--------
e0a       Cluster      Cluster          up   9000  auto/10000
healthy
e0b       Cluster      Cluster          up   9000  auto/10000
healthy

4 entries were displayed.
```

b. Display information about the LIFs: `network interface show -vserver Cluster`

Show example

```
cluster1::*> network interface show -vserver Cluster

            Logical    Status     Network            Current
Current Is
Vserver     Interface  Admin/Oper Address/Mask       Node
Port    Home
----------- ---------- ---------- ------------------
------------ ------- ----
Cluster
            node1_clus1  up/up    169.254.209.69/16  node1
e0a     true
            node1_clus2  up/up    169.254.49.125/16  node1
e0b     true
            node2_clus1  up/up    169.254.47.194/16  node2
e0a     true
            node2_clus2  up/up    169.254.19.183/16  node2
e0b     true

4 entries were displayed.
```

5. Verify the connectivity of the remote cluster interfaces:

ONTAP 9.9.1 and later

You can use the `network interface check cluster-connectivity` command to start an accessibility check for cluster connectivity and then display the details:

`network interface check cluster-connectivity start` and `network interface check cluster-connectivity show`

```
cluster1::*> network interface check cluster-connectivity start
```

NOTE: Wait for a number of seconds before running the `show` command to display the details.

```
cluster1::*> network interface check cluster-connectivity show
                                  Source           Destination
Packet
Node   Date                       LIF              LIF
Loss
------ -------------------------- ---------------- ----------------
-----------
node1
       3/5/2022 19:21:18 -06:00   node1_clus2      node2-clus1
none
       3/5/2022 19:21:20 -06:00   node1_clus2      node2_clus2
none
node2
       3/5/2022 19:21:18 -06:00   node2_clus2      node1_clus1
none
       3/5/2022 19:21:20 -06:00   node2_clus2      node1_clus2
none
```

All ONTAP releases

For all ONTAP releases, you can also use the `cluster ping-cluster -node <name>` command to check the connectivity:

```
cluster ping-cluster -node <name>
```

```
cluster1::*> cluster ping-cluster -node local
Host is node2
Getting addresses from network interface table...
Cluster node1_clus1 169.254.209.69 node1     e0a
Cluster node1_clus2 169.254.49.125 node1     e0b
Cluster node2_clus1 169.254.47.194 node2     e0a
Cluster node2_clus2 169.254.19.183 node2     e0b
Local = 169.254.47.194 169.254.19.183
Remote = 169.254.209.69 169.254.49.125
Cluster Vserver Id = 4294967293
Ping status:

Basic connectivity succeeds on 4 path(s)
Basic connectivity fails on 0 path(s)

Detected 9000 byte MTU on 4 path(s):
    Local 169.254.19.183 to Remote 169.254.209.69
    Local 169.254.19.183 to Remote 169.254.49.125
    Local 169.254.47.194 to Remote 169.254.209.69
    Local 169.254.47.194 to Remote 169.254.49.125
Larger than PMTU communication succeeds on 4 path(s)
RPC status:
2 paths up, 0 paths down (tcp check)
2 paths up, 0 paths down (udp check)
```

6. Verify that the auto-revert command is enabled on all cluster LIFs:

```
network interface show -vserver Cluster -fields auto-revert
```

Show example

```
cluster1::*> network interface show -vserver Cluster -fields auto-
revert

          Logical
Vserver   Interface     Auto-revert
--------- ------------- ------------
Cluster
          node1_clus1   true
          node1_clus2   true
          node2_clus1   true
          node2_clus2   true

4 entries were displayed.
```

What's next?

After you've prepared to install the NX-OS software and RCF, you can install the NX-OS software.

Install the NX-OS software

Follow this procedure to install the NX-OS software on the Nexus 92300YC switch.

NX-OS is a network operating system for the Nexus series of Ethernet switches and MDS series of Fibre Channel (FC) storage area network switches provided by Cisco Systems.

Review requirements

Supported ports and node connections

- The Inter-Switch Links (ISLs) supported for the Nexus 92300YC switches are ports 1/65 and 1/66.
- The node connections supported for the Nexus 92300YC switches are ports 1/1 through 1/66.

Before you begin

Make sure you have the following:

- Applicable NetApp Cisco NX-OS software for your switches from the NetApp Support Site, available from mysupport.netapp.com
- A fully functioning cluster (no errors in the logs or similar issues).
- Cisco Ethernet switch page. Consult the switch compatibility table for the supported ONTAP and NX-OS versions.

Install the software

The examples in this procedure use two nodes, but you can have up to 24 nodes in a cluster.

About the examples

The examples in this procedure use the following switch and node nomenclature:

- The Nexus 92300YC switch names are `cs1` and `cs2`.
- The example used in this procedure starts the upgrade on the second switch, **cs2**.
- The cluster LIF names are `node1_clus1` and `node1_clus2` for node1, and `node2_clus1` and `node2_clus2` for node2.
- The IPspace name is `Cluster`.
- The `cluster1::*>` prompt indicates the name of the cluster.
- The cluster ports on each node are named `e0a` and `e0b`.

  See the *Hardware Universe^* for the actual cluster ports supported on your platform. See What additional information do I need to install my equipment that is not in HWU? for more information about switch installation requirements.

Steps

1. Connect the cluster switch to the management network.
2. Use the `ping` command to verify connectivity to the server hosting the NX-OS software and the RCF.

   Show example

   This example verifies that the switch can reach the server at IP address 172.19.2.1:

   ```
   cs2# ping 172.19.2.1
   Pinging 172.19.2.1 with 0 bytes of data:

   Reply From 172.19.2.1: icmp_seq = 0. time= 5910 usec.
   ```

3. Copy the NX-OS software and EPLD images to the Nexus 92300YC switch.

Show example

```
cs2# copy sftp: bootflash: vrf management
Enter source filename: /code/nxos.9.2.2.bin
Enter hostname for the sftp server: 172.19.2.1
Enter username: user1

Outbound-ReKey for 172.19.2.1:22
Inbound-ReKey for 172.19.2.1:22
user1@172.19.2.1's password:
sftp> progress
Progress meter enabled
sftp> get   /code/nxos.9.2.2.bin  /bootflash/nxos.9.2.2.bin
/code/nxos.9.2.2.bin  100% 1261MB   9.3MB/s   02:15
sftp> exit
Copy complete, now saving to disk (please wait)...
Copy complete.


cs2# copy sftp: bootflash: vrf management
Enter source filename: /code/n9000-epld.9.2.2.img
Enter hostname for the sftp server: 172.19.2.1
Enter username: user1

Outbound-ReKey for 172.19.2.1:22
Inbound-ReKey for 172.19.2.1:22
user1@172.19.2.1's password:
sftp> progress
Progress meter enabled
sftp> get   /code/n9000-epld.9.2.2.img  /bootflash/n9000-
epld.9.2.2.img
/code/n9000-epld.9.2.2.img  100%  161MB   9.5MB/s   00:16
sftp> exit
Copy complete, now saving to disk (please wait)...
Copy complete.
```

4. Verify the running version of the NX-OS software:

   ```
   show version
   ```

Show example

```
cs2# show version
Cisco Nexus Operating System (NX-OS) Software
TAC support: http://www.cisco.com/tac
Copyright (C) 2002-2018, Cisco and/or its affiliates.
All rights reserved.
The copyrights to certain works contained in this software are
owned by other third parties and used and distributed under their
own
licenses, such as open source.  This software is provided "as is,"
and unless
otherwise stated, there is no warranty, express or implied,
including but not
limited to warranties of merchantability and fitness for a
particular purpose.
Certain components of this software are licensed under
the GNU General Public License (GPL) version 2.0 or
GNU General Public License (GPL) version 3.0  or the GNU
Lesser General Public License (LGPL) Version 2.1 or
Lesser General Public License (LGPL) Version 2.0.
A copy of each such license is available at
http://www.opensource.org/licenses/gpl-2.0.php and
http://opensource.org/licenses/gpl-3.0.html and
http://www.opensource.org/licenses/lgpl-2.1.php and
http://www.gnu.org/licenses/old-licenses/library.txt.

Software
  BIOS: version 05.31
  NXOS: version 9.2(1)
  BIOS compile time:  05/17/2018
  NXOS image file is: bootflash:///nxos.9.2.1.bin
  NXOS compile time:  7/17/2018 16:00:00 [07/18/2018 00:21:19]


Hardware
  cisco Nexus9000 C92300YC Chassis
  Intel(R) Xeon(R) CPU D-1526 @ 1.80GHz with 16337884 kB of memory.
  Processor Board ID FDO220329V5

  Device name: cs2
  bootflash:  115805356 kB
Kernel uptime is 0 day(s), 4 hour(s), 23 minute(s), 11 second(s)

Last reset at 271444 usecs after Wed Apr 10 00:25:32 2019
  Reason: Reset Requested by CLI command reload
```

```
  System version: 9.2(1)
  Service:

plugin
  Core Plugin, Ethernet Plugin

Active Package(s):

cs2#
```

5. Install the NX-OS image.

   Installing the image file causes it to be loaded every time the switch is rebooted.

Show example

```
cs2# install all nxos bootflash:nxos.9.2.2.bin

Installer will perform compatibility check first. Please wait.
Installer is forced disruptive

Verifying image bootflash:/nxos.9.2.2.bin for boot variable "nxos".
[] 100% -- SUCCESS

Verifying image type.
[] 100% -- SUCCESS

Preparing "nxos" version info using image bootflash:/nxos.9.2.2.bin.
[] 100% -- SUCCESS

Preparing "bios" version info using image bootflash:/nxos.9.2.2.bin.
[] 100% -- SUCCESS

Performing module support checks.
[] 100% -- SUCCESS

Notifying services about system upgrade.
[] 100% -- SUCCESS



Compatibility check is done:
Module  bootable       Impact     Install-type  Reason
------  --------  --------------- ------------  ------
  1       yes      disruptive         reset     default upgrade is
not hitless



Images will be upgraded according to following table:

Module   Image         Running-Version(pri:alt            New-
Version         Upg-Required
------  --------  ------------------------------------
------------------  ------------
  1       nxos                                   9.2(1)
9.2(2)         yes
  1       bios    v05.31(05/17/2018):v05.28(01/18/2018)
v05.33(09/08/2018)       yes
```

```
Switch will be reloaded for disruptive upgrade.
Do you want to continue with the installation (y/n)?  [n] y


Install is in progress, please wait.

Performing runtime checks.
[] 100% -- SUCCESS

Setting boot variables.
[] 100% -- SUCCESS

Performing configuration copy.
[] 100% -- SUCCESS

Module 1: Refreshing compact flash and upgrading
bios/loader/bootrom.
Warning: please do not remove or power off the module at this time.
[] 100% -- SUCCESS
2019 Apr 10 04:59:35 cs2 %$ VDC-1 %$ %VMAN-2-ACTIVATION_STATE:
Successfully deactivated virtual service 'guestshell+'

Finishing the upgrade, switch will reboot in 10 seconds.
```

6. Verify the new version of NX-OS software after the switch has rebooted:

```
show version
```

Show example

```
cs2# show version

Cisco Nexus Operating System (NX-OS) Software
TAC support: http://www.cisco.com/tac
Copyright (C) 2002-2018, Cisco and/or its affiliates.
All rights reserved.
The copyrights to certain works contained in this software are
owned by other third parties and used and distributed under their
own
licenses, such as open source.  This software is provided "as is,"
and unless
otherwise stated, there is no warranty, express or implied,
including but not
limited to warranties of merchantability and fitness for a
particular purpose.
Certain components of this software are licensed under
the GNU General Public License (GPL) version 2.0 or
GNU General Public License (GPL) version 3.0  or the GNU
Lesser General Public License (LGPL) Version 2.1 or
Lesser General Public License (LGPL) Version 2.0.
A copy of each such license is available at
http://www.opensource.org/licenses/gpl-2.0.php and
http://opensource.org/licenses/gpl-3.0.html and
http://www.opensource.org/licenses/lgpl-2.1.php and
http://www.gnu.org/licenses/old-licenses/library.txt.

Software
  BIOS: version 05.33
  NXOS: version 9.2(2)
  BIOS compile time:  09/08/2018
  NXOS image file is: bootflash:///nxos.9.2.2.bin
  NXOS compile time:  11/4/2018 21:00:00 [11/05/2018 06:11:06]


Hardware
  cisco Nexus9000 C92300YC Chassis
  Intel(R) Xeon(R) CPU D-1526 @ 1.80GHz with 16337884 kB of memory.
  Processor Board ID FDO220329V5

  Device name: cs2
  bootflash:  115805356 kB
  Kernel uptime is 0 day(s), 0 hour(s), 3 minute(s), 52 second(s)

Last reset at 182004 usecs after Wed Apr 10 04:59:48 2019
```

```
  Reason: Reset due to upgrade
  System version: 9.2(1)
  Service:

plugin
  Core Plugin, Ethernet Plugin

Active Package(s):
```

7. Upgrade the EPLD image and reboot the switch.

Show example

```
cs2# show version module 1 epld

EPLD Device                       Version
---------------------------------------
MI FPGA                            0x7
IO FPGA                            0x17
MI FPGA2                           0x2
GEM FPGA                           0x2
GEM FPGA                           0x2
GEM FPGA                           0x2
GEM FPGA                           0x2

cs2# install epld bootflash:n9000-epld.9.2.2.img module 1
Compatibility check:
Module        Type         Upgradable        Impact   Reason
------  -----------------  ----------    ----------   ------
     1            SUP           Yes       disruptive  Module
Upgradable

Retrieving EPLD versions.... Please wait.
Images will be upgraded according to following table:
Module  Type   EPLD              Running-Version   New-Version  Upg-
Required
------  ----  -------------      ---------------   -----------
------------
     1   SUP  MI FPGA                   0x07        0x07
No
     1   SUP  IO FPGA                   0x17        0x19
Yes
     1   SUP  MI FPGA2                  0x02        0x02
No
The above modules require upgrade.
The switch will be reloaded at the end of the upgrade
Do you want to continue (y/n) ?  [n] y

Proceeding to upgrade Modules.

Starting Module 1 EPLD Upgrade

Module 1 : IO FPGA [Programming] : 100.00% (     64 of      64
sectors)
Module 1 EPLD upgrade is successful.
Module        Type  Upgrade-Result
------  ------------------  --------------
```

```
      1          SUP          Success


EPLDs upgraded.

Module 1 EPLD upgrade is successful.
```

8. After the switch reboot, log in again and verify that the new version of EPLD loaded successfully.

Show example

```
cs2# *show version module 1 epld*

EPLD Device                          Version
---------------------------------------
MI FPGA                               0x7
IO FPGA                               0x19
MI FPGA2                              0x2
GEM FPGA                              0x2
GEM FPGA                              0x2
GEM FPGA                              0x2
GEM FPGA                              0x2
```

What's next?

After you've installed the NX-OS software, you can install the Reference Configuration File.

Install the Reference Configuration File (RCF)

You can install the RCF after setting up the Nexus 92300YC switch for the first time. You can also use this procedure to upgrade your RCF version.

See the Knowledge Base article How to clear configuration on a Cisco interconnect switch while retaining remote connectivity for further information when installing or upgrading your RCF.

About this task

The examples in this procedure use the following switch and node nomenclature:

- The names of the two Cisco switches are `cs1` and `cs2`.
- The node names are `node1` and `node2`.
- The cluster LIF names are `node1_clus1`, `node1_clus2`, `node2_clus1`, and `node2_clus2`.
- The `cluster1::*>` prompt indicates the name of the cluster.

- The procedure requires the use of both ONTAP commands and Cisco Nexus 9000 Series Switches; ONTAP commands are used unless otherwise indicated.
- Before you perform this procedure, make sure that you have a current backup of the switch configuration.
- No operational inter-switch link (ISL) is needed during this procedure. This is by design because RCF version changes can affect ISL connectivity temporarily. To ensure non-disruptive cluster operations, the following procedure migrates all of the cluster LIFs to the operational partner switch while performing the steps on the target switch.

Steps

1. Display the cluster ports on each node that are connected to the cluster switches:
   `network device-discovery show`

   Show example

```
cluster1::*> *network device-discovery show*
Node/       Local  Discovered
Protocol    Port   Device (LLDP: ChassisID)  Interface
Platform
----------- ------ ------------------------- ----------------
------------
node1/cdp
            e0a    cs1                       Ethernet1/1/1     N9K-
C92300YC
            e0b    cs2                       Ethernet1/1/1     N9K-
C92300YC
node2/cdp
            e0a    cs1                       Ethernet1/1/2     N9K-
C92300YC
            e0b    cs2                       Ethernet1/1/2     N9K-
C92300YC
cluster1::*>
```

2. Check the administrative and operational status of each cluster port.
   a. Verify that all the cluster ports are up with a healthy status:
      `network port show -ipspace Cluster`

Show example

```
cluster1::*> *network port show -ipspace Cluster*

Node: node1

Ignore
                                                        Speed(Mbps)
Health   Health
Port      IPspace      Broadcast Domain Link MTU  Admin/Oper
Status   Status
--------- ------------ ---------------- ---- ---- -----------
-------- ------
e0c       Cluster      Cluster          up   9000  auto/100000
healthy false
e0d       Cluster      Cluster          up   9000  auto/100000
healthy false

Node: node2

Ignore
                                                        Speed(Mbps)
Health   Health
Port      IPspace      Broadcast Domain Link MTU  Admin/Oper
Status   Status
--------- ------------ ---------------- ---- ---- -----------
-------- ------
e0c       Cluster      Cluster          up   9000  auto/100000
healthy false
e0d       Cluster      Cluster          up   9000  auto/100000
healthy false
cluster1::*>
```

b. Verify that all the cluster interfaces (LIFs) are on the home port:
`network interface show -vserver Cluster`

Show example

```
cluster1::*> *network interface show -vserver Cluster*
            Logical            Status     Network
Current      Current Is
Vserver     Interface          Admin/Oper Address/Mask      Node
Port    Home
----------- ------------------ ---------- -----------------
------------ ------- ----
Cluster
            node1_clus1        up/up      169.254.3.4/23    node1
e0c     true
            node1_clus2        up/up      169.254.3.5/23    node1
e0d     true
            node2_clus1        up/up      169.254.3.8/23    node2
e0c     true
            node2_clus2        up/up      169.254.3.9/23    node2
e0d     true
cluster1::*>
```

c. Verify that the cluster displays information for both cluster switches:
`system cluster-switch show -is-monitoring-enabled-operational true`

Show example

```
cluster1::*> *system cluster-switch show -is-monitoring-enabled
-operational true*
Switch                      Type               Address
Model
--------------------------- ------------------ ----------------
---------------
cs1                         cluster-network    10.233.205.92
N9K-C92300YC
     Serial Number: FOXXXXXXXGS
      Is Monitored: true
            Reason: None
  Software Version: Cisco Nexus Operating System (NX-OS)
Software, Version
                    9.3(4)
    Version Source: CDP

cs2                         cluster-network    10.233.205.93
N9K-C92300YC
     Serial Number: FOXXXXXXXGD
      Is Monitored: true
            Reason: None
  Software Version: Cisco Nexus Operating System (NX-OS)
Software, Version
                    9.3(4)
    Version Source: CDP

2 entries were displayed.
```

3. Disable auto-revert on the cluster LIFs.

```
cluster1::*> network interface modify -vserver Cluster -lif * -auto
-revert false
```

4. On cluster switch cs2, shut down the ports connected to the cluster ports of the nodes.

```
cs2(config)# interface e1/1-64
cs2(config-if-range)# shutdown
```

5. Verify that the cluster ports have migrated to the ports hosted on cluster switch cs1. This might take a few seconds.
   `network interface show -vserver Cluster`

Show example

```
cluster1::*> *network interface show -vserver Cluster*
            Logical           Status     Network            Current
Current Is
Vserver     Interface         Admin/Oper Address/Mask       Node
Port    Home
----------- ----------------- ---------- ------------------
------------ ------- ----
Cluster
            node1_clus1       up/up      169.254.3.4/23     node1
e0c     true
            node1_clus2       up/up      169.254.3.5/23     node1
e0c     false
            node2_clus1       up/up      169.254.3.8/23     node2
e0c     true
            node2_clus2       up/up      169.254.3.9/23     node2
e0c     false
cluster1::*>
```

6. Verify that the cluster is healthy:
`cluster show`

Show example

```
cluster1::*> *cluster show*
Node           Health  Eligibility   Epsilon
-------------- ------- ------------  -------
node1          true    true          false
node2          true    true          false
cluster1::*>
```

7. If you have not already done so, save a copy of the current switch configuration by copying the output of the following command to a text file:

`show running-config`

8. Clean the configuration on switch cs2 and perform a basic setup.

When updating or applying a new RCF, you must erase the switch settings and perform basic configuration. You must be connected to the switch serial console port to set up the switch again.

a. Clean the configuration:

Show example

```
(cs2)# write erase

Warning: This command will erase the startup-configuration.

Do you wish to proceed anyway? (y/n)  [n]  y
```

b. Perform a reboot of the switch:

Show example

```
(cs2)# reload

Are you sure you would like to reset the system? (y/n) y
```

9. Copy the RCF to the bootflash of switch cs2 using one of the following transfer protocols: FTP, TFTP, SFTP, or SCP. For more information on Cisco commands, see the appropriate guide in the Cisco Nexus 9000 Series Switches guides.

   This example shows TFTP being used to copy an RCF to the bootflash on switch cs2:

```
cs2# copy tftp: bootflash: vrf management
Enter source filename: /code/Nexus_92300YC_RCF_v1.0.2.txt
Enter hostname for the tftp server: 172.19.2.1
Enter username: user1

Outbound-ReKey for 172.19.2.1:22
Inbound-ReKey for 172.19.2.1:22
user1@172.19.2.1's password:
tftp> progress
Progress meter enabled
tftp> get /code/Nexus_92300YC_RCF_v1.0.2.txt /bootflash/nxos.9.2.2.bin
/code/Nexus_92300YC_R  100% 9687   530.2KB/s   00:00
tftp> exit
Copy complete, now saving to disk (please wait)...
Copy complete.
```

10. Apply the RCF previously downloaded to the bootflash.

    For more information on Cisco commands, see the appropriate guide in the Cisco Nexus 9000 Series Switches guides.

This example shows the RCF file `Nexus_92300YC_RCF_v1.0.2.txt` being installed on switch cs2:

```
cs2# copy Nexus_92300YC_RCF_v1.0.2.txt running-config echo-commands

Disabling ssh: as its enabled right now:
 generating ecdsa key(521 bits)......
generated ecdsa key

Enabling ssh: as it has been disabled
 this command enables edge port type (portfast) by default on all
interfaces. You
 should now disable edge port type (portfast) explicitly on switched
ports leading to hubs,
 switches and bridges as they may create temporary bridging loops.

Edge port type (portfast) should only be enabled on ports connected to a
single
 host. Connecting hubs, concentrators, switches, bridges, etc...  to
this
 interface when edge port type (portfast) is enabled, can cause
temporary bridging loops.
 Use with CAUTION

Edge Port Type (Portfast) has been configured on Ethernet1/1 but will
only
 have effect when the interface is in a non-trunking mode.

...

Copy complete, now saving to disk (please wait)...
Copy complete.
```

11. Verify on the switch that the RCF has been merged successfully:

```
show running-config
```

```
cs2# show running-config
!Command: show running-config
!Running configuration last done at: Wed Apr 10 06:32:27 2019
!Time: Wed Apr 10 06:36:00 2019

version 9.2(2) Bios:version 05.33
switchname cs2
vdc cs2 id 1
  limit-resource vlan minimum 16 maximum 4094
  limit-resource vrf minimum 2 maximum 4096
  limit-resource port-channel minimum 0 maximum 511
  limit-resource u4route-mem minimum 248 maximum 248
  limit-resource u6route-mem minimum 96 maximum 96
  limit-resource m4route-mem minimum 58 maximum 58
  limit-resource m6route-mem minimum 8 maximum 8

feature lacp

no password strength-check
username admin password 5
$5$HY9Kk3F9$YdCZ8iQJ1RtoiEFa0sKP5IO/LNG1k9C4lSJfi5kesl
6  role network-admin
ssh key ecdsa 521

banner motd #

*
*
*  Nexus 92300YC Reference Configuration File (RCF) v1.0.2 (10-19-2018)
*
*
*
*  Ports 1/1  - 1/48: 10GbE Intra-Cluster Node Ports
*
*  Ports 1/49 - 1/64: 40/100GbE Intra-Cluster Node Ports
*
*  Ports 1/65 - 1/66: 40/100GbE Intra-Cluster ISL Ports
*
*
*
```

When applying the RCF for the first time, the **ERROR: Failed to write VSH commands** message is expected and can be ignored.

12. Verify that the RCF file is the correct newer version:

`show running-config`

When you check the output to verify you have the correct RCF, make sure that the following information is correct:

- The RCF banner
- The node and port settings
- Customizations

  The output varies according to your site configuration. Check the port settings and refer to the release notes for any changes specific to the RCF that you have installed.

13. Reapply any previous customizations to the switch configuration. Refer to Review cabling and configuration considerations for details of any further changes required.
14. After you verify the RCF versions and switch settings are correct, copy the running-config file to the startup-config file.

    For more information on Cisco commands, see the appropriate guide in the Cisco Nexus 9000 Series Switches guides.

```
cs2# copy running-config startup-config
[] 100% Copy complete
```

15. Reboot switch cs2. You can ignore the "cluster ports down" events reported on the nodes while the switch reboots.

```
cs2# reload
This command will reboot the system. (y/n)?  [n] y
```

16. Verify the health of the cluster ports on the cluster.

    a. Verify that e0d ports are up and healthy across all nodes in the cluster:
    `network port show -ipspace Cluster`

Show example

```
cluster1::*> *network port show -ipspace Cluster*

Node: node1

Ignore
                                                        Speed(Mbps)
Health   Health
Port      IPspace      Broadcast Domain Link MTU  Admin/Oper
Status   Status
--------- ------------ ---------------- ---- ---- -----------
-------- ------
e0a       Cluster      Cluster          up   9000  auto/10000
healthy  false
e0b       Cluster      Cluster          up   9000  auto/10000
healthy  false

Node: node2

Ignore
                                                        Speed(Mbps)
Health   Health
Port      IPspace      Broadcast Domain Link MTU  Admin/Oper
Status   Status
--------- ------------ ---------------- ---- ---- -----------
-------- ------
e0a       Cluster      Cluster          up   9000  auto/10000
healthy  false
e0b       Cluster      Cluster          up   9000  auto/10000
healthy  false
```

b. Verify the switch health from the cluster (this might not show switch cs2, since LIFs are not homed on e0d).

Show example

```
cluster1::*> *network device-discovery show -protocol cdp*
Node/       Local  Discovered
Protocol    Port   Device (LLDP: ChassisID)  Interface
Platform
----------- ------ ------------------------- -----------------
------------
node1/cdp
            e0a    cs1                       Ethernet1/1
N9K-C92300YC
            e0b    cs2                       Ethernet1/1
N9K-C92300YC
node2/cdp
            e0a    cs1                       Ethernet1/2
N9K-C92300YC
            e0b    cs2                       Ethernet1/2
N9K-C92300YC

cluster1::*> *system cluster-switch show -is-monitoring-enabled
-operational true*
Switch                      Type               Address
Model
--------------------------- ------------------ ----------------
------------
cs1                         cluster-network    10.233.205.90
N9K-C92300YC
     Serial Number: FOXXXXXXXGD
      Is Monitored: true
            Reason: None
  Software Version: Cisco Nexus Operating System (NX-OS)
Software, Version
                    9.3(4)
    Version Source: CDP

cs2                         cluster-network    10.233.205.91
N9K-C92300YC
     Serial Number: FOXXXXXXXGS
      Is Monitored: true
            Reason: None
  Software Version: Cisco Nexus Operating System (NX-OS)
Software, Version
                    9.3(4)
    Version Source: CDP

2 entries were displayed.
```

You might observe the following output on the cs1 switch console depending on the RCF version previously loaded on the switch

```
2020 Nov 17 16:07:18 cs1 %$ VDC-1 %$ %STP-2-
UNBLOCK_CONSIST_PORT: Unblocking port port-channel1 on
VLAN0092. Port consistency restored.
2020 Nov 17 16:07:23 cs1 %$ VDC-1 %$ %STP-2-BLOCK_PVID_PEER:
Blocking port-channel1 on VLAN0001. Inconsistent peer vlan.
2020 Nov 17 16:07:23 cs1 %$ VDC-1 %$ %STP-2-BLOCK_PVID_LOCAL:
Blocking port-channel1 on VLAN0092. Inconsistent local vlan.
```

17. On cluster switch cs1, shut down the ports connected to the cluster ports of the nodes.

    The following example uses the interface example output from step 1:

```
cs1(config)# interface e1/1-64
cs1(config-if-range)# shutdown
```

18. Verify that the cluster LIFs have migrated to the ports hosted on switch cs2. This might take a few seconds.
    `network interface show -vserver Cluster`

    Show example

```
cluster1::*> *network interface show -vserver Cluster*
            Logical          Status     Network            Current
Current Is
Vserver     Interface        Admin/Oper Address/Mask       Node
Port    Home
----------- ---------------- ---------- ------------------
----------------- ------- ----
Cluster
            node1_clus1      up/up      169.254.3.4/23     node1
e0d     false
            node1_clus2      up/up      169.254.3.5/23     node1
e0d     true
            node2_clus1      up/up      169.254.3.8/23     node2
e0d     false
            node2_clus2      up/up      169.254.3.9/23     node2
e0d     true
cluster1::*>
```

19. Verify that the cluster is healthy:
    `cluster show`

Show example

```
cluster1::*> *cluster show*
Node           Health   Eligibility   Epsilon
-------------- -------- ------------- -------
node1          true     true          false
node2          true     true          false
cluster1::*>
```

20. Repeat Steps 7 to 14 on switch cs1.
21. Enable auto-revert on the cluster LIFs.

```
cluster1::*> network interface modify -vserver Cluster -lif * -auto
-revert True
```

22. Reboot switch cs1. You do this to trigger the cluster LIFs to revert to their home ports. You can ignore the "cluster ports down" events reported on the nodes while the switch reboots.

```
cs1# reload
This command will reboot the system. (y/n)?  [n] y
```

23. Verify that the switch ports connected to the cluster ports are up.

```
cs1# show interface brief | grep up
.
.
Ethernet1/1      1       eth  access up      none
10G(D) --
Ethernet1/2      1       eth  access up      none
10G(D) --
Ethernet1/3      1       eth  trunk  up      none
100G(D) --
Ethernet1/4      1       eth  trunk  up      none
100G(D) --
.
.
```

24. Verify that the ISL between cs1 and cs2 is functional:
`show port-channel summary`

Show example

```
cs1# *show port-channel summary*
Flags:  D - Down        P - Up in port-channel (members)
        I - Individual  H - Hot-standby (LACP only)
        s - Suspended   r - Module-removed
        b - BFD Session Wait
        S - Switched    R - Routed
        U - Up (port-channel)
        p - Up in delay-lacp mode (member)
        M - Not in use. Min-links not met
--------------------------------------------------------------------------
------------
Group Port-       Type     Protocol  Member Ports
      Channel
--------------------------------------------------------------------------
------------
1     Po1(SU)     Eth      LACP      Eth1/65(P)   Eth1/66(P)
cs1#
```

25. Verify that the cluster LIFs have reverted to their home port:
`network interface show -vserver Cluster`

Show example

```
cluster1::*> *network interface show -vserver Cluster*
            Logical       Status     Network            Current
Current Is
Vserver     Interface     Admin/Oper Address/Mask       Node
Port    Home
----------- ------------- ---------- ------------------
------------ ------- ----
Cluster
            node1_clus1   up/up      169.254.3.4/23     node1
e0d     true
            node1_clus2   up/up      169.254.3.5/23     node1
e0d     true
            node2_clus1   up/up      169.254.3.8/23     node2
e0d     true
            node2_clus2   up/up      169.254.3.9/23     node2
e0d     true
cluster1::*>
```

26. Verify that the cluster is healthy:
`cluster show`

Show example

```
cluster1::*> *cluster show*
Node           Health  Eligibility   Epsilon
-------------- ------- ------------- -------
node1          true    true          false
node2          true    true          false
```

27. Verify the connectivity of the remote cluster interfaces:

ONTAP 9.9.1 and later

You can use the `network interface check cluster-connectivity` command to start an accessibility check for cluster connectivity and then display the details:

`network interface check cluster-connectivity start` and `network interface check cluster-connectivity show`

```
cluster1::*> network interface check cluster-connectivity start
```

NOTE: Wait for a number of seconds before running the `show` command to display the details.

```
cluster1::*> network interface check cluster-connectivity show
                                  Source           Destination
Packet
Node   Date                       LIF              LIF
Loss
------ -------------------------- ---------------- ----------------
-----------
node1
       3/5/2022 19:21:18 -06:00   node1_clus2      node2-clus1
none
       3/5/2022 19:21:20 -06:00   node1_clus2      node2_clus2
none
node2
       3/5/2022 19:21:18 -06:00   node2_clus2      node1_clus1
none
       3/5/2022 19:21:20 -06:00   node2_clus2      node1_clus2
none
```

All ONTAP releases

For all ONTAP releases, you can also use the `cluster ping-cluster -node <name>` command to check the connectivity:

```
cluster ping-cluster -node <name>
```

```
cluster1::*> cluster ping-cluster -node local
Host is node1
Getting addresses from network interface table...
Cluster node1_clus1 169.254.3.4 node1 e0a
Cluster node1_clus2 169.254.3.5 node1 e0b
Cluster node2_clus1 169.254.3.8 node2 e0a
Cluster node2_clus2 169.254.3.9 node2 e0b
Local = 169.254.1.3 169.254.1.1
Remote = 169.254.1.6 169.254.1.7 169.254.3.4 169.254.3.5 169.254.3.8
169.254.3.9
Cluster Vserver Id = 4294967293
Ping status:
............
Basic connectivity succeeds on 12 path(s)
Basic connectivity fails on 0 path(s)
................................................
Detected 9000 byte MTU on 12 path(s):
    Local 169.254.1.3 to Remote 169.254.1.6
    Local 169.254.1.3 to Remote 169.254.1.7
    Local 169.254.1.3 to Remote 169.254.3.4
    Local 169.254.1.3 to Remote 169.254.3.5
    Local 169.254.1.3 to Remote 169.254.3.8
    Local 169.254.1.3 to Remote 169.254.3.9
    Local 169.254.1.1 to Remote 169.254.1.6
    Local 169.254.1.1 to Remote 169.254.1.7
    Local 169.254.1.1 to Remote 169.254.3.4
    Local 169.254.1.1 to Remote 169.254.3.5
    Local 169.254.1.1 to Remote 169.254.3.8
    Local 169.254.1.1 to Remote 169.254.3.9
Larger than PMTU communication succeeds on 12 path(s)
RPC status:
6 paths up, 0 paths down (tcp check)
6 paths up, 0 paths down (udp check)
```

What's next?

After you've installed the RCF, you can
verify the SSH configuration.

Verify your SSH configuration

If you are using the Ethernet Switch Health Monitor (CSHM) and log collection features, verify that SSH and SSH keys are enabled on the cluster switches.

Steps

1. Verify that SSH is enabled:

```
(switch) show ssh server
ssh version 2 is enabled
```

2. Verify that the SSH keys are enabled:

   `show ssh key`

   Show example

```
(switch)# show ssh key

rsa Keys generated:Fri Jun 28 02:16:00 2024

ssh-rsa
AAAAB3NzaC1yc2EAAAADAQABAAAAgQDiNrD52Q586wTGJjFAbjBlFaA23EpDrZ2sDCew
l7nwlioC6HBejxluIObAH8hrW8kR+gj0ZAfPpNeLGTg3APj/yiPTBoIZZxbWRShywAM5
PqyxWwRb7kp9Zt1YHzVuHYpSO82KUDowKrL6lox/YtpKoZUDZjrZjAp8hTv3JZsPgQ==

bitcount:1024
fingerprint:
SHA256:aHwhpzo7+YCDSrp3isJv2uVGz+mjMMokqdMeXVVXfdo

could not retrieve dsa key information

ecdsa Keys generated:Fri Jun 28 02:30:56 2024

ecdsa-sha2-nistp521
AAAAE2VjZHNhLXNoYTItbmlzdHA1MjEAAAAIbmlzdHA1MjEAAACFBABJ+ZX5SFKhS57e
vkE273e0VoqZi4/32dt+f14fBuKv80MjMsmLfjKtCWy1wgVt1Zi+C5TIBbugpzez529z
kFSF0ADb8JaGCoaAYe2HvWR/f6QLbKbqVIewCdqWgxzrIY5BPP5GBdxQJMBiOwEdnHg1
u/9Pzh/Vz9cHDcCW9qGE780QHA==

bitcount:521
fingerprint:
SHA256:TFGe2hXn6QIpcs/vyHzftHJ7Dceg0vQaULYRAlZeHwQ

(switch)# show feature | include scpServer
scpServer             1          enabled
(switch)# show feature | include ssh
sshServer             1          enabled
(switch)#
```

When enabling FIPS, you must change the bitcount to 256 on the switch using the command `ssh key ecdsa 256 force`. See Configure network security using FIPS for more details.

What's next?

After you've verified your SSH configuration, you can configure switch health monitoring.

Migrate switches

Migrate to a two-node switched cluster with a Cisco Nexus 92300YC switch

If you have an existing two-node *switchless* cluster environment, you can migrate to a two-node *switched* cluster environment using Cisco Nexus 92300YC switches to enable you to scale beyond two nodes in the cluster.

The procedure you use depends on whether you have two dedicated cluster-network ports on each controller or a single cluster port on each controller. The process documented works for all nodes using optical or twinax ports, but is not supported on this switch if nodes are using onboard 10Gb BASE-T RJ45 ports for the cluster-network ports.

Most systems require two dedicated cluster-network ports on each controller.

After your migration completes, you might need to install the required configuration file to support the Cluster Switch Health Monitor (CSHM) for 92300YC cluster switches. See Switch Health Monitoring (CSHM).

Review requirements

Before you begin

Make sure you have the following:

For a two-node switchless configuration, ensure that:

- The two-node switchless configuration is properly set up and functioning.
- The nodes are running ONTAP 9.6 and later.
- All cluster ports are in the **up** state.
- All cluster logical interfaces (LIFs) are in the **up** state and on their home ports.

For the Cisco Nexus 92300YC switch configuration:

- Both switches have management network connectivity.
- There is console access to the cluster switches.
- Nexus 92300YC node-to-node switch and switch-to-switch connections use twinax or fiber cables.

  Hardware Universe - Switches contains more information about cabling.
- Inter-Switch Link (ISL) cables are connected to ports 1/65 and 1/66 on both 92300YC switches.
- Initial customization of both the 92300YC switches are completed. So that the:
  - 92300YC switches are running the latest version of software

- Reference Configuration Files (RCFs) are applied to the switches
  Any site customization, such as SMTP, SNMP, and SSH is configured on the new switches.

Migrate the switch

About the examples

The examples in this procedure use the following cluster switch and node nomenclature:

- The names of the 92300YC switches are cs1 and cs2.
- The names of the cluster SVMs are node1 and node2.
- The names of the LIFs are node1_clus1 and node1_clus2 on node 1, and node2_clus1 and node2_clus2 on node 2 respectively.
- The `cluster1::*>` prompt indicates the name of the cluster.
- The cluster ports used in this procedure are e0a and e0b.

  Hardware Universe contains the latest information about the actual cluster ports for your platforms.

Step 1: Prepare for migration

1. Change the privilege level to advanced, entering `y` when prompted to continue:

   ```
   set -privilege advanced
   ```

   The advanced prompt (`*>`) appears.

2. If AutoSupport is enabled on this cluster, suppress automatic case creation by invoking an AutoSupport message:

   ```
   system node autosupport invoke -node * -type all -message MAINT=xh
   ```

   where x is the duration of the maintenance window in hours.

   The AutoSupport message notifies technical support of this maintenance task so that automatic case creation is suppressed during the maintenance window.

   Show example

   The following command suppresses automatic case creation for two hours:

   ```
   cluster1::*> system node autosupport invoke -node * -type all
   -message MAINT=2h
   ```

Step 2: Configure cables and ports

1. Disable all node-facing ports (not ISL ports) on both the new cluster switches cs1 and cs2.

   You must not disable the ISL ports.

Show example

The following example shows that node-facing ports 1 through 64 are disabled on switch cs1:

```
cs1# config
Enter configuration commands, one per line. End with CNTL/Z.
cs1(config)# interface e/1-64
cs1(config-if-range)# shutdown
```

2. Verify that the ISL and the physical ports on the ISL between the two 92300YC switches cs1 and cs2 are up on ports 1/65 and 1/66:

   ```
   show port-channel summary
   ```

Show example

The following example shows that the ISL ports are up on switch cs1:

```
cs1# show port-channel summary

Flags:  D - Down        P - Up in port-channel (members)
        I - Individual  H - Hot-standby (LACP only)
        s - Suspended   r - Module-removed
        b - BFD Session Wait
        S - Switched    R - Routed
        U - Up (port-channel)
        p - Up in delay-lacp mode (member)
        M - Not in use. Min-links not met
--------------------------------------------------------------------------
------------
Group Port-       Type     Protocol  Member Ports
      Channel
--------------------------------------------------------------------------
------------
1     Po1(SU)     Eth      LACP      Eth1/65(P)   Eth1/66(P)
```

+
The following example shows that the ISL ports are up on switch cs2 :

+

```
(cs2)# show port-channel summary

Flags:  D - Down        P - Up in port-channel (members)
        I - Individual  H - Hot-standby (LACP only)
        s - Suspended   r - Module-removed
        b - BFD Session Wait
        S - Switched    R - Routed
        U - Up (port-channel)
        p - Up in delay-lacp mode (member)
        M - Not in use. Min-links not met
--------------------------------------------------------------------------
------------
Group Port-       Type     Protocol  Member Ports
      Channel
--------------------------------------------------------------------------
------------
1     Po1(SU)     Eth      LACP      Eth1/65(P)   Eth1/66(P)
```

3. Display the list of neighboring devices:

   ```
   show cdp neighbors
   ```

   This command provides information about the devices that are connected to the system.

Show example

The following example lists the neighboring devices on switch cs1:

```
cs1# show cdp neighbors

Capability Codes: R - Router, T - Trans-Bridge, B - Source-Route-
Bridge
                  S - Switch, H - Host, I - IGMP, r - Repeater,
                  V - VoIP-Phone, D - Remotely-Managed-Device,
                  s - Supports-STP-Dispute

Device-ID          Local Intrfce  Hldtme Capability  Platform
Port ID
cs2(FDO220329V5)    Eth1/65        175    R S I s   N9K-C92300YC
Eth1/65
cs2(FDO220329V5)    Eth1/66        175    R S I s   N9K-C92300YC
Eth1/66

Total entries displayed: 2
```

+
The following example lists the neighboring devices on switch cs2:

+

```
cs2# show cdp neighbors

Capability Codes: R - Router, T - Trans-Bridge, B - Source-Route-
Bridge
                  S - Switch, H - Host, I - IGMP, r - Repeater,
                  V - VoIP-Phone, D - Remotely-Managed-Device,
                  s - Supports-STP-Dispute

Device-ID          Local Intrfce  Hldtme Capability  Platform
Port ID
cs1(FDO220329KU)    Eth1/65        177    R S I s   N9K-C92300YC
Eth1/65
cs1(FDO220329KU)    Eth1/66        177    R S I s   N9K-C92300YC
Eth1/66

Total entries displayed: 2
```

4. Verify that all cluster ports are up:

```
network port show -ipspace Cluster
```

Each port should display up for `Link` and healthy for `Health Status`.

Show example

```
cluster1::*> network port show -ipspace Cluster

Node: node1

                                                  Speed(Mbps) Health
Port      IPspace      Broadcast Domain Link MTU  Admin/Oper  Status
--------- ------------ ---------------- ---- ---- -----------
--------
e0a       Cluster      Cluster          up   9000  auto/10000
healthy
e0b       Cluster      Cluster          up   9000  auto/10000
healthy

Node: node2

                                                  Speed(Mbps) Health
Port      IPspace      Broadcast Domain Link MTU  Admin/Oper  Status
--------- ------------ ---------------- ---- ---- -----------
--------
e0a       Cluster      Cluster          up   9000  auto/10000
healthy
e0b       Cluster      Cluster          up   9000  auto/10000
healthy

4 entries were displayed.
```

5. Verify that all cluster LIFs are up and operational:

```
network interface show -vserver Cluster
```

Each cluster LIF should display true for `Is Home` and have a `Status Admin/Oper` of up/up

Show example

```
cluster1::*> network interface show -vserver Cluster

            Logical    Status     Network            Current
Current Is
Vserver     Interface  Admin/Oper Address/Mask       Node
Port    Home
----------- ---------- ---------- ------------------ -------------
------- -----
Cluster
            node1_clus1  up/up    169.254.209.69/16  node1
e0a     true
            node1_clus2  up/up    169.254.49.125/16  node1
e0b     true
            node2_clus1  up/up    169.254.47.194/16  node2
e0a     true
            node2_clus2  up/up    169.254.19.183/16  node2
e0b     true
4 entries were displayed.
```

6. Disable auto-revert on all of the cluster LIFs:

   `network interface modify -vserver Cluster -lif * -auto-revert false`

Show example

```
cluster1::*> network interface modify -vserver Cluster -lif * -auto
-revert false

          Logical
Vserver   Interface     auto-revert
--------- ------------- ------------
Cluster
          node1_clus1   false
          node1_clus2   false
          node2_clus1   false
          node2_clus2   false

4 entries were displayed.
```

7. Disconnect the cable from cluster port e0a on node1, and then connect e0a to port 1 on cluster switch cs1, using the appropriate cabling supported by the 92300YC switches.

The *Hardware Universe - Switches* contains more information about cabling.

8. Disconnect the cable from cluster port e0a on node2, and then connect e0a to port 2 on cluster switch cs1, using the appropriate cabling supported by the 92300YC switches.
9. Enable all node-facing ports on cluster switch cs1.

Show example

The following example shows that ports 1/1 through 1/64 are enabled on switch cs1:

```
cs1# config
Enter configuration commands, one per line. End with CNTL/Z.
cs1(config)# interface e1/1-64
cs1(config-if-range)# no shutdown
```

10. Verify that all cluster LIFs are up, operational, and display as true for `Is Home`:

`network interface show -vserver Cluster`

Show example

The following example shows that all of the LIFs are up on node1 and node2 and that `Is Home` results are true:

```
cluster1::*> network interface show -vserver Cluster

         Logical      Status     Network            Current
Current Is
Vserver  Interface    Admin/Oper Address/Mask       Node         Port
Home
-------- ------------ ---------- ------------------ -----------
------- ----
Cluster
         node1_clus1  up/up      169.254.209.69/16  node1        e0a
true
         node1_clus2  up/up      169.254.49.125/16  node1        e0b
true
         node2_clus1  up/up      169.254.47.194/16  node2        e0a
true
         node2_clus2  up/up      169.254.19.183/16  node2        e0b
true

4 entries were displayed.
```

11. Display information about the status of the nodes in the cluster:

    `cluster show`

    Show example

    The following example displays information about the health and eligibility of the nodes in the cluster:

    ```
    cluster1::*> cluster show

    Node                 Health  Eligibility   Epsilon
    -------------------- ------- ------------  ------------
    node1                true    true          false
    node2                true    true          false

    2 entries were displayed.
    ```

12. Disconnect the cable from cluster port e0b on node1, and then connect e0b to port 1 on cluster switch cs2, using the appropriate cabling supported by the 92300YC switches.
13. Disconnect the cable from cluster port e0b on node2, and then connect e0b to port 2 on cluster switch cs2, using the appropriate cabling supported by the 92300YC switches.
14. Enable all node-facing ports on cluster switch cs2.

    Show example

    The following example shows that ports 1/1 through 1/64 are enabled on switch cs2:

    ```
    cs2# config
    Enter configuration commands, one per line. End with CNTL/Z.
    cs2(config)# interface e1/1-64
    cs2(config-if-range)# no shutdown
    ```

Step 3: Verify the configuration

1. Enable auto-revert on the cluster LIFs.

   `network interface modify -vserver Cluster -lif * -auto-revert true`

2. Verify that all cluster ports are up:

   `network port show -ipspace Cluster`

Show example

The following example shows that all of the cluster ports are up on node1 and node2:

```
cluster1::*> network port show -ipspace Cluster

Node: node1

Ignore
                                                  Speed(Mbps) Health
Health
Port      IPspace      Broadcast Domain Link MTU  Admin/Oper  Status
Status
--------- ------------ ---------------- ---- ---- -----------
-------- ------
e0a       Cluster      Cluster          up   9000  auto/10000
healthy  false
e0b       Cluster      Cluster          up   9000  auto/10000
healthy  false

Node: node2

Ignore
                                                  Speed(Mbps) Health
Health
Port      IPspace      Broadcast Domain Link MTU  Admin/Oper  Status
Status
--------- ------------ ---------------- ---- ---- -----------
-------- ------
e0a       Cluster      Cluster          up   9000  auto/10000
healthy  false
e0b       Cluster      Cluster          up   9000  auto/10000
healthy  false

4 entries were displayed.
```

3. Verify that all interfaces display true for `Is Home`:

   `network interface show -vserver Cluster`

   This might take several minutes to complete.

Show example

The following example shows that all LIFs are up on node1 and node2 and that `Is Home` results are true:

```
cluster1::*> network interface show -vserver Cluster

          Logical      Status     Network            Current
Current Is
Vserver   Interface    Admin/Oper Address/Mask       Node       Port
Home
--------- ------------ ---------- ------------------ ----------
------- ----
Cluster
          node1_clus1  up/up      169.254.209.69/16  node1      e0a
true
          node1_clus2  up/up      169.254.49.125/16  node1      e0b
true
          node2_clus1  up/up      169.254.47.194/16  node2      e0a
true
          node2_clus2  up/up      169.254.19.183/16  node2      e0b
true

4 entries were displayed.
```

4. Verify that both nodes each have one connection to each switch:

   `show cdp neighbors`

Show example

The following example shows the appropriate results for both switches:

```
(cs1)# show cdp neighbors

Capability Codes: R - Router, T - Trans-Bridge, B - Source-Route-
Bridge
                  S - Switch, H - Host, I - IGMP, r - Repeater,
                  V - VoIP-Phone, D - Remotely-Managed-Device,
                  s - Supports-STP-Dispute

Device-ID          Local Intrfce  Hldtme Capability  Platform
Port ID
node1               Eth1/1         133    H         FAS2980
e0a
node2               Eth1/2         133    H         FAS2980
e0a
cs2(FDO220329V5)    Eth1/65        175    R S I s   N9K-C92300YC
Eth1/65
cs2(FDO220329V5)    Eth1/66        175    R S I s   N9K-C92300YC
Eth1/66

Total entries displayed: 4


(cs2)# show cdp neighbors

Capability Codes: R - Router, T - Trans-Bridge, B - Source-Route-
Bridge
                  S - Switch, H - Host, I - IGMP, r - Repeater,
                  V - VoIP-Phone, D - Remotely-Managed-Device,
                  s - Supports-STP-Dispute

Device-ID          Local Intrfce  Hldtme Capability  Platform
Port ID
node1               Eth1/1         133    H         FAS2980
e0b
node2               Eth1/2         133    H         FAS2980
e0b
cs1(FDO220329KU)
                    Eth1/65        175    R S I s   N9K-C92300YC
Eth1/65
cs1(FDO220329KU)
                    Eth1/66        175    R S I s   N9K-C92300YC
Eth1/66

Total entries displayed: 4
```

5. Display information about the discovered network devices in your cluster:

   `network device-discovery show -protocol cdp`

   Show example

```
cluster1::*> network device-discovery show -protocol cdp
Node/       Local  Discovered
Protocol    Port   Device (LLDP: ChassisID)  Interface
Platform
----------- ------ ------------------------- ----------------
----------------
node2      /cdp
            e0a    cs1                       0/2               N9K-
C92300YC
            e0b    cs2                       0/2               N9K-
C92300YC
node1      /cdp
            e0a    cs1                       0/1               N9K-
C92300YC
            e0b    cs2                       0/1               N9K-
C92300YC

4 entries were displayed.
```

6. Verify that the settings are disabled:

   `network options switchless-cluster show`

   It might take several minutes for the command to complete. Wait for the '3 minute lifetime to expire' announcement.

   Show example

   The false output in the following example shows that the configuration settings are disabled:

```
cluster1::*> network options switchless-cluster show
Enable Switchless Cluster: false
```

7. Verify the status of the node members in the cluster:

   `cluster show`

Show example

The following example shows information about the health and eligibility of the nodes in the cluster:

```
cluster1::*> cluster show

Node                 Health  Eligibility   Epsilon
-------------------- ------- ------------  --------
node1                true    true          false
node2                true    true          false
```

8. Verify the connectivity of the remote cluster interfaces:

ONTAP 9.9.1 and later

You can use the `network interface check cluster-connectivity` command to start an accessibility check for cluster connectivity and then display the details:

`network interface check cluster-connectivity start` and `network interface check cluster-connectivity show`

```
cluster1::*> network interface check cluster-connectivity start
```

NOTE: Wait for a number of seconds before running the `show` command to display the details.

```
cluster1::*> network interface check cluster-connectivity show
                                  Source           Destination
Packet
Node   Date                       LIF              LIF
Loss
------ -------------------------- ---------------- ----------------
-----------
node1
       3/5/2022 19:21:18 -06:00   node1_clus2      node2-clus1
none
       3/5/2022 19:21:20 -06:00   node1_clus2      node2_clus2
none
node2
       3/5/2022 19:21:18 -06:00   node2_clus2      node1_clus1
none
       3/5/2022 19:21:20 -06:00   node2_clus2      node1_clus2
none
```

All ONTAP releases

For all ONTAP releases, you can also use the `cluster ping-cluster -node <name>` command to check the connectivity:

```
cluster ping-cluster -node <name>
```

```
cluster1::*> cluster ping-cluster -node local

Host is node2
Getting addresses from network interface table...
Cluster node1_clus1 169.254.209.69 node1 e0a
Cluster node1_clus2 169.254.49.125 node1 e0b
Cluster node2_clus1 169.254.47.194 node2 e0a
Cluster node2_clus2 169.254.19.183 node2 e0b
Local = 169.254.47.194 169.254.19.183
Remote = 169.254.209.69 169.254.49.125
Cluster Vserver Id = 4294967293
Ping status:

Basic connectivity succeeds on 4 path(s)
Basic connectivity fails on 0 path(s)

Detected 9000 byte MTU on 4 path(s):
Local 169.254.47.194 to Remote 169.254.209.69
Local 169.254.47.194 to Remote 169.254.49.125
Local 169.254.19.183 to Remote 169.254.209.69
Local 169.254.19.183 to Remote 169.254.49.125
Larger than PMTU communication succeeds on 4 path(s)
RPC status:
2 paths up, 0 paths down (tcp check)
2 paths up, 0 paths down (udp check)
```

8. If you suppressed automatic case creation, reenable it by invoking an AutoSupport message:

   ```
   system node autosupport invoke -node * -type all -message MAINT=END
   ```

   Show example

   ```
   cluster1::*> system node autosupport invoke -node * -type all
   -message MAINT=END
   ```

9. Change the privilege level back to admin:

   ```
   set -privilege admin
   ```

What's next?

After you've verified your SSH configuration, you can configure switch health monitoring.

Replace switches

Replace a Cisco Nexus 92300YC switch

Replacing a defective Nexus 92300YC switch in a cluster network is a nondisruptive procedure (NDU).

Review requirements

Before you begin

Before performing the switch replacement, ensure that:

- In the existing cluster and network infrastructure:
  - The existing cluster is verified as completely functional, with at least one fully connected cluster switch.
  - All cluster ports are up.
  - All cluster logical interfaces (LIFs) are up and on their home ports.
  - The ONTAP cluster ping-cluster -node node1 command must indicate that basic connectivity and larger than PMTU communication are successful on all paths.
- For the Nexus 92300YC replacement switch:
  - Management network connectivity on the replacement switch are functional.
  - Console access to the replacement switch are in place.
  - The node connections are ports 1/1 through 1/64.
  - All Inter-Switch Link (ISL) ports are disabled on ports 1/65 and 1/66.
  - The desired reference configuration file (RCF) and NX-OS operating system image switch are loaded onto the switch.
  - Initial customization of the switch are complete, as detailed in: Configure the Cisco Nexus 92300YC switch.

    Any previous site customizations, such as STP, SNMP, and SSH, are copied to the new switch.

Enable console logging

NetApp strongly recommends that you enable console logging on the devices that you are using and take the following actions when replacing your switch:

- Leave AutoSupport enabled during maintenance.
- Trigger a maintenance AutoSupport before and after maintenance to disable case creation for the duration of the maintenance. See this Knowledge Base article SU92: How to suppress automatic case creation during scheduled maintenance windows for further details.
- Enable session logging for any CLI sessions. For instructions on how to enable session logging, review the "Logging Session Output" section in this Knowledge Base article How to configure PuTTY for optimal connectivity to ONTAP systems.

Replace the switch

About the examples

The examples in this procedure use the following switch and node nomenclature:

- The names of the existing Nexus 92300YC switches are cs1 and cs2.
- The name of the new Nexus 92300YC switch is newcs2.
- The node names are node1 and node2.
- The cluster ports on each node are named e0a and e0b.
- The cluster LIF names are node1_clus1 and node1_clus2 for node1, and node2_clus1 and node2_clus2 for node2.
- The prompt for changes to all cluster nodes is cluster1::*>

About this task

You must execute the command for migrating a cluster LIF from the node where the cluster LIF is hosted.

The following procedure is based on the following cluster network topology:

Show topology

```
cluster1::*> network port show -ipspace Cluster

Node: node1

Ignore
                                                  Speed(Mbps) Health
Health
Port      IPspace      Broadcast Domain Link MTU  Admin/Oper  Status
Status
--------- ------------ ---------------- ---- ---- ----------- --------
------
e0a       Cluster      Cluster          up   9000  auto/10000 healthy
false
e0b       Cluster      Cluster          up   9000  auto/10000 healthy
false

Node: node2

Ignore
                                                  Speed(Mbps) Health
Health
Port      IPspace      Broadcast Domain Link MTU  Admin/Oper  Status
Status
--------- ------------ ---------------- ---- ---- ----------- --------
------
e0a       Cluster      Cluster          up   9000  auto/10000 healthy
false
e0b       Cluster      Cluster          up   9000  auto/10000 healthy
false
4 entries were displayed.



cluster1::*> network interface show -vserver Cluster
            Logical    Status     Network            Current
Current Is
Vserver     Interface  Admin/Oper Address/Mask       Node          Port
Home
----------- ---------- ---------- ------------------ -------------
------- ----
Cluster
            node1_clus1  up/up    169.254.209.69/16  node1         e0a
true
            node1_clus2  up/up    169.254.49.125/16  node1         e0b
```

```
true
            node2_clus1  up/up    169.254.47.194/16  node2         e0a
true
            node2_clus2  up/up    169.254.19.183/16  node2         e0b
true
4 entries were displayed.



cluster1::*> network device-discovery show -protocol cdp
Node/       Local  Discovered
Protocol    Port   Device (LLDP: ChassisID)  Interface         Platform
----------- ------ ------------------------- ----------------
----------------
node2      /cdp
            e0a    cs1                       Eth1/2            N9K-
C92300YC
            e0b    cs2                       Eth1/2            N9K-
C92300YC
node1      /cdp
            e0a    cs1                       Eth1/1            N9K-
C92300YC
            e0b    cs2                       Eth1/1            N9K-
C92300YC
4 entries were displayed.



cs1# show cdp neighbors

Capability Codes: R - Router, T - Trans-Bridge, B - Source-Route-Bridge
                  S - Switch, H - Host, I - IGMP, r - Repeater,
                  V - VoIP-Phone, D - Remotely-Managed-Device,
                  s - Supports-STP-Dispute

Device-ID          Local Intrfce  Hldtme Capability  Platform      Port
ID
node1              Eth1/1         144    H           FAS2980       e0a
node2              Eth1/2         145    H           FAS2980       e0a
cs2(FDO220329V5)   Eth1/65        176    R S I s     N9K-C92300YC
Eth1/65
cs2(FDO220329V5)   Eth1/66        176    R S I s     N9K-C92300YC
Eth1/66

Total entries displayed: 4
```

```
cs2# show cdp neighbors

Capability Codes: R - Router, T - Trans-Bridge, B - Source-Route-Bridge
                  S - Switch, H - Host, I - IGMP, r - Repeater,
                  V - VoIP-Phone, D - Remotely-Managed-Device,
                  s - Supports-STP-Dispute

Device-ID          Local Intrfce  Hldtme Capability  Platform      Port
ID
node1              Eth1/1         139    H           FAS2980       e0b
node2              Eth1/2         124    H           FAS2980       e0b
cs1(FDO220329KU)   Eth1/65        178    R S I s     N9K-C92300YC
Eth1/65
cs1(FDO220329KU)   Eth1/66        178    R S I s     N9K-C92300YC
Eth1/66

Total entries displayed: 4
```

Step 1: Prepare for replacement

1. Install the appropriate RCF and image on the switch, newcs2, and make any necessary site preparations.

   If necessary, verify, download, and install the appropriate versions of the RCF and NX-OS software for the new switch. If you have verified that the new switch is correctly set up and does not need updates to the RCF and NX-OS software, continue to step 2.

   a. Go to the *NetApp Cluster and Management Network Switches Reference Configuration File Description Page* on the NetApp Support Site.

   b. Click the link for the *Cluster Network and Management Network Compatibility Matrix*, and then note the required switch software version.

   c. Click your browser's back arrow to return to the **Description** page, click **CONTINUE**, accept the license agreement, and then go to the **Download** page.

   d. Follow the steps on the Download page to download the correct RCF and NX-OS files for the version of ONTAP software you are installing.

2. On the new switch, log in as admin and shut down all of the ports that will be connected to the node cluster interfaces (ports 1/1 to 1/64).

   If the switch that you are replacing is not functional and is powered down, go to Step 4. The LIFs on the cluster nodes should have already failed over to the other cluster port for each node.

Show example

```
newcs2# config
Enter configuration commands, one per line. End with CNTL/Z.
newcs2(config)# interface e1/1-64
newcs2(config-if-range)# shutdown
```

3. Verify that all cluster LIFs have auto-revert enabled:

   `network interface show -vserver Cluster -fields auto-revert`

   Show example

```
cluster1::> network interface show -vserver Cluster -fields auto-
revert

             Logical
Vserver      Interface     Auto-revert
------------ ------------- -------------
Cluster      node1_clus1   true
Cluster      node1_clus2   true
Cluster      node2_clus1   true
Cluster      node2_clus2   true

4 entries were displayed.
```

4. Verify the connectivity of the remote cluster interfaces:

ONTAP 9.9.1 and later

You can use the `network interface check cluster-connectivity` command to start an accessibility check for cluster connectivity and then display the details:

`network interface check cluster-connectivity start` and `network interface check cluster-connectivity show`

```
cluster1::*> network interface check cluster-connectivity start
```

NOTE: Wait for a number of seconds before running the `show` command to display the details.

```
cluster1::*> network interface check cluster-connectivity show
                                  Source           Destination
Packet
Node   Date                       LIF              LIF
Loss
------ -------------------------- ---------------- ----------------
-----------
node1
       3/5/2022 19:21:18 -06:00   node1_clus2      node2-clus1
none
       3/5/2022 19:21:20 -06:00   node1_clus2      node2_clus2
none
node2
       3/5/2022 19:21:18 -06:00   node2_clus2      node1_clus1
none
       3/5/2022 19:21:20 -06:00   node2_clus2      node1_clus2
none
```

All ONTAP releases

For all ONTAP releases, you can also use the `cluster ping-cluster -node <name>` command to check the connectivity:

```
cluster ping-cluster -node <name>
```

```
cluster1::*> cluster ping-cluster -node local
Host is node2
Getting addresses from network interface table...
Cluster node1_clus1 169.254.209.69 node1 e0a
Cluster node1_clus2 169.254.49.125 node1 e0b
Cluster node2_clus1 169.254.47.194 node2 e0a
Cluster node2_clus2 169.254.19.183 node2 e0b
Local = 169.254.47.194 169.254.19.183
Remote = 169.254.209.69 169.254.49.125
Cluster Vserver Id = 4294967293
Ping status:
....
Basic connectivity succeeds on 4 path(s)
Basic connectivity fails on 0 path(s)
................
Detected 9000 byte MTU on 4 path(s):
Local 169.254.47.194 to Remote 169.254.209.69
Local 169.254.47.194 to Remote 169.254.49.125
Local 169.254.19.183 to Remote 169.254.209.69
Local 169.254.19.183 to Remote 169.254.49.125
Larger than PMTU communication succeeds on 4 path(s)
RPC status:
2 paths up, 0 paths down (tcp check)
2 paths up, 0 paths down (udp check)
```

Step 2: Configure cables and ports

1. Shut down the ISL ports 1/65 and 1/66 on the Nexus 92300YC switch cs1:

   Show example

   ```
   cs1# configure
   Enter configuration commands, one per line. End with CNTL/Z.
   cs1(config)# interface e1/65-66
   cs1(config-if-range)# shutdown
   cs1(config-if-range)#
   ```

2. Remove all of the cables from the Nexus 92300YC cs2 switch, and then connect them to the same ports on the Nexus 92300YC newcs2 switch.
3. Bring up the ISLs ports 1/65 and 1/66 between the cs1 and newcs2 switches, and then verify the port channel operation status.

   Port-Channel should indicate Po1(SU) and Member Ports should indicate Eth1/65(P) and Eth1/66(P).

Show example

This example enables ISL ports 1/65 and 1/66 and displays the port channel summary on switch cs1:

```
cs1# configure
Enter configuration commands, one per line. End with CNTL/Z.
cs1(config)# int e1/65-66
cs1(config-if-range)# no shutdown

cs1(config-if-range)# show port-channel summary
Flags:  D - Down        P - Up in port-channel (members)
        I - Individual  H - Hot-standby (LACP only)
        s - Suspended   r - Module-removed
        b - BFD Session Wait
        S - Switched    R - Routed
        U - Up (port-channel)
        p - Up in delay-lacp mode (member)
        M - Not in use. Min-links not met
--------------------------------------------------------------------------
------------
Group Port-       Type     Protocol  Member Ports
      Channel
--------------------------------------------------------------------------
------------
1     Po1(SU)     Eth      LACP      Eth1/65(P)   Eth1/66(P)

cs1(config-if-range)#
```

4. Verify that port e0b is up on all nodes:

   `network port show ipspace Cluster`

Show example

The output should be similar to the following:

```
cluster1::*> network port show -ipspace Cluster

Node: node1

Ignore
                                                  Speed(Mbps)
Health   Health
Port      IPspace      Broadcast Domain Link MTU   Admin/Oper
Status   Status
--------- ------------ ---------------- ---- ----- -----------
-------- -------
e0a       Cluster      Cluster          up   9000  auto/10000
healthy  false
e0b       Cluster      Cluster          up   9000  auto/10000
healthy  false

Node: node2

Ignore
                                                  Speed(Mbps)
Health   Health
Port      IPspace      Broadcast Domain Link MTU   Admin/Oper
Status   Status
--------- ------------ ---------------- ---- ----- -----------
-------- -------
e0a       Cluster      Cluster          up   9000  auto/10000
healthy  false
e0b       Cluster      Cluster          up   9000  auto/auto   -
false

4 entries were displayed.
```

5. On the same node you used in the previous step, revert the cluster LIF associated with the port in the previous step by using the network interface revert command.

Show example

In this example, LIF node1_clus2 on node1 is successfully reverted if the Home value is true and the port is e0b.

The following commands return LIF `node1_clus2` on `node1` to home port `e0a` and displays information about the LIFs on both nodes. Bringing up the first node is successful if the Is Home column is true for both cluster interfaces and they show the correct port assignments, in this example `e0a` and `e0b` on node1.

```
cluster1::*> network interface show -vserver Cluster

            Logical      Status     Network            Current
Current Is
Vserver     Interface    Admin/Oper Address/Mask       Node
Port    Home
----------- ------------ ---------- ------------------ ----------
------- -----
Cluster
            node1_clus1  up/up      169.254.209.69/16  node1
e0a     true
            node1_clus2  up/up      169.254.49.125/16  node1
e0b     true
            node2_clus1  up/up      169.254.47.194/16  node2
e0a     true
            node2_clus2  up/up      169.254.19.183/16  node2
e0a     false

4 entries were displayed.
```

6. Display information about the nodes in a cluster:

   `cluster show`

Show example

This example shows that the node health for node1 and node2 in this cluster is true:

```
cluster1::*> cluster show

Node          Health  Eligibility
------------- ------- ------------
node1         false   true
node2         true    true
```

7. Verify that all physical cluster ports are up:

   `network port show ipspace Cluster`

   Show example

```
cluster1::*> network port show -ipspace Cluster

Node: node1

Ignore
                                                        Speed(Mbps)
Health   Health
Port      IPspace     Broadcast Domain  Link  MTU   Admin/Oper
Status   Status
--------- ----------- ----------------- ----- ----- -----------
-------- ------
e0a       Cluster     Cluster           up    9000  auto/10000
healthy  false
e0b       Cluster     Cluster           up    9000  auto/10000
healthy  false

Node: node2

Ignore
                                                        Speed(Mbps)
Health   Health
Port      IPspace      Broadcast Domain Link  MTU   Admin/Oper
Status   Status
--------- ------------ ---------------- ----- ----- -----------
-------- ------
e0a       Cluster      Cluster          up    9000  auto/10000
healthy  false
e0b       Cluster      Cluster          up    9000  auto/10000
healthy  false

4 entries were displayed.
```

Step 3: Complete the procedure

1. Verify the connectivity of the remote cluster interfaces:

ONTAP 9.9.1 and later

You can use the `network interface check cluster-connectivity` command to start an accessibility check for cluster connectivity and then display the details:

`network interface check cluster-connectivity start` and `network interface check cluster-connectivity show`

```
cluster1::*> network interface check cluster-connectivity start
```

NOTE: Wait for a number of seconds before running the `show` command to display the details.

```
cluster1::*> network interface check cluster-connectivity show
                                  Source           Destination
Packet
Node   Date                       LIF              LIF
Loss
------ -------------------------- ---------------- ----------------
-----------
node1
       3/5/2022 19:21:18 -06:00   node1_clus2      node2-clus1
none
       3/5/2022 19:21:20 -06:00   node1_clus2      node2_clus2
none
node2
       3/5/2022 19:21:18 -06:00   node2_clus2      node1_clus1
none
       3/5/2022 19:21:20 -06:00   node2_clus2      node1_clus2
none
```

All ONTAP releases

For all ONTAP releases, you can also use the `cluster ping-cluster -node <name>` command to check the connectivity:

```
cluster ping-cluster -node <name>
```

```
cluster1::*> cluster ping-cluster -node local
Host is node2
Getting addresses from network interface table...
Cluster node1_clus1 169.254.209.69 node1 e0a
Cluster node1_clus2 169.254.49.125 node1 e0b
Cluster node2_clus1 169.254.47.194 node2 e0a
Cluster node2_clus2 169.254.19.183 node2 e0b
Local = 169.254.47.194 169.254.19.183
Remote = 169.254.209.69 169.254.49.125
Cluster Vserver Id = 4294967293
Ping status:
....
Basic connectivity succeeds on 4 path(s)
Basic connectivity fails on 0 path(s)
................
Detected 9000 byte MTU on 4 path(s):
Local 169.254.47.194 to Remote 169.254.209.69
Local 169.254.47.194 to Remote 169.254.49.125
Local 169.254.19.183 to Remote 169.254.209.69
Local 169.254.19.183 to Remote 169.254.49.125
Larger than PMTU communication succeeds on 4 path(s)
RPC status:
2 paths up, 0 paths down (tcp check)
2 paths up, 0 paths down (udp check)
```

2. Confirm the following cluster network configuration:

```
network port show
```

Show example

```
cluster1::*> network port show -ipspace Cluster
Node: node1

Ignore
                                        Speed(Mbps)            Health
Health
Port      IPspace     Broadcast Domain Link MTU   Admin/Oper  Status
Status
--------- ----------- ---------------- ---- ----- -----------
-------- ------
e0a       Cluster     Cluster          up   9000  auto/10000
healthy  false
e0b       Cluster     Cluster          up   9000  auto/10000
healthy  false

Node: node2

Ignore
                                         Speed(Mbps)           Health
Health
Port      IPspace      Broadcast Domain Link MTU  Admin/Oper  Status
Status
--------- ------------ ---------------- ---- ---- -----------
-------- ------
e0a       Cluster      Cluster          up   9000 auto/10000
healthy  false
e0b       Cluster      Cluster          up   9000 auto/10000
healthy  false

4 entries were displayed.


cluster1::*> network interface show -vserver Cluster

            Logical    Status     Network            Current
Current Is
Vserver     Interface  Admin/Oper Address/Mask       Node
Port    Home
----------- ---------- ---------- ------------------ -------------
------- ----
Cluster
            node1_clus1  up/up    169.254.209.69/16  node1
e0a     true
            node1_clus2  up/up    169.254.49.125/16  node1
```

```
e0b     true
            node2_clus1  up/up    169.254.47.194/16  node2
e0a     true
            node2_clus2  up/up    169.254.19.183/16  node2
e0b     true

4 entries were displayed.

cluster1::> network device-discovery show -protocol cdp

Node/       Local  Discovered
Protocol    Port   Device (LLDP: ChassisID)  Interface
Platform
----------- ------ ------------------------- ----------------
----------------
node2      /cdp
            e0a    cs1                       0/2               N9K-
C92300YC
            e0b    newcs2                    0/2               N9K-
C92300YC
node1      /cdp
            e0a    cs1                       0/1               N9K-
C92300YC
            e0b    newcs2                    0/1               N9K-
C92300YC

4 entries were displayed.


cs1# show cdp neighbors

Capability Codes: R - Router, T - Trans-Bridge, B - Source-Route-
Bridge
                  S - Switch, H - Host, I - IGMP, r - Repeater,
                  V - VoIP-Phone, D - Remotely-Managed-Device,
                  s - Supports-STP-Dispute

Device-ID            Local Intrfce  Hldtme Capability  Platform
Port ID
node1                Eth1/1         144    H           FAS2980
e0a
node2                Eth1/2         145    H           FAS2980
e0a
newcs2(FDO296348FU)  Eth1/65        176    R S I s     N9K-C92300YC
Eth1/65
newcs2(FDO296348FU)  Eth1/66        176    R S I s     N9K-C92300YC
```

```
Eth1/66


Total entries displayed: 4


cs2# show cdp neighbors

Capability Codes: R - Router, T - Trans-Bridge, B - Source-Route-
Bridge
                  S - Switch, H - Host, I - IGMP, r - Repeater,
                  V - VoIP-Phone, D - Remotely-Managed-Device,
                  s - Supports-STP-Dispute

Device-ID          Local Intrfce  Hldtme Capability  Platform
Port ID
node1              Eth1/1         139    H           FAS2980
e0b
node2              Eth1/2         124    H           FAS2980
e0b
cs1(FDO220329KU)   Eth1/65        178    R S I s     N9K-C92300YC
Eth1/65
cs1(FDO220329KU)   Eth1/66        178    R S I s     N9K-C92300YC
Eth1/66

Total entries displayed: 4
```

What's next?

After you've verified your SSH configuration, you can configure switch health monitoring.

Replace Cisco Nexus 92300YC cluster switches with switchless connections

You can migrate from a cluster with a switched cluster network to one where two nodes are directly connected for ONTAP 9.3 and later.

Review requirements

Guidelines

Review the following guidelines:

- Migrating to a two-node switchless cluster configuration is a nondisruptive operation. Most systems have two dedicated cluster interconnect ports on each node, but you can also use this procedure for systems with a larger number of dedicated cluster interconnect ports on each node, such as four, six or eight.
- You cannot use the switchless cluster interconnect feature with more than two nodes.
- If you have an existing two-node cluster that uses cluster interconnect switches and is running ONTAP 9.3

or later, you can replace the switches with direct, back-to-back connections between the nodes.

Before you begin

Make sure you have the following:

- A healthy cluster that consists of two nodes connected by cluster switches. The nodes must be running the same ONTAP release.
- Each node with the required number of dedicated cluster ports, which provide redundant cluster interconnect connections to support your system configuration. For example, there are two redundant ports for a system with two dedicated cluster interconnect ports on each node.

Migrate the switches

About this task

The following procedure removes the cluster switches in a two-node cluster and replaces each connection to the switch with a direct connection to the partner node.

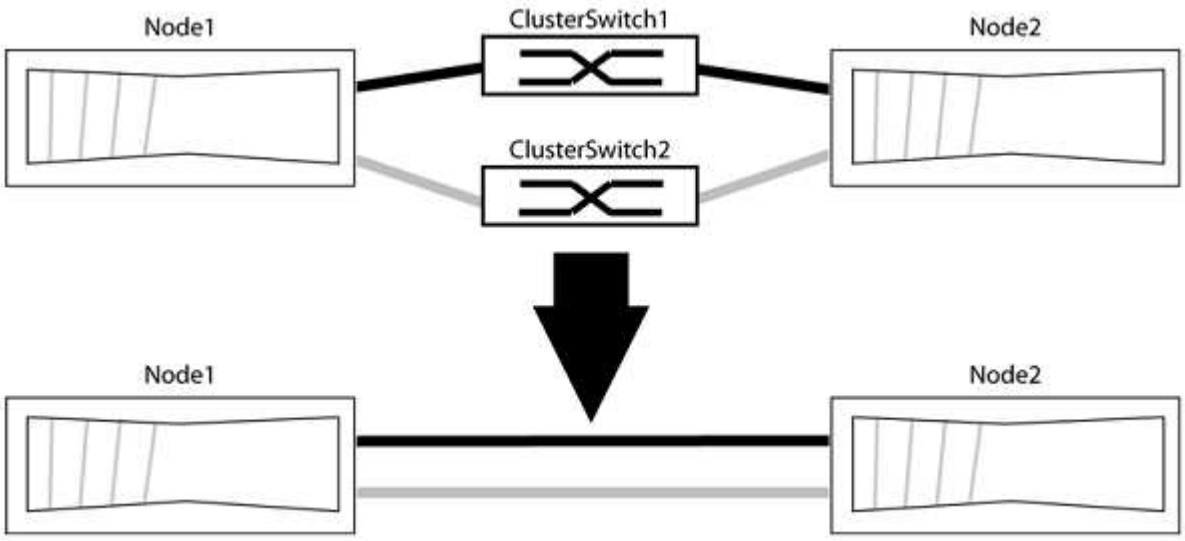

About the examples

The examples in the following procedure show nodes that are using "e0a" and "e0b" as cluster ports. Your nodes might be using different cluster ports as they vary by system.

Step 1: Prepare for migration

1. Change the privilege level to advanced, entering `y` when prompted to continue:

   ```
   set -privilege advanced
   ```

   The advanced prompt `*>` appears.

2. ONTAP 9.3 and later supports automatic detection of switchless clusters, which is enabled by default.

   You can verify that detection of switchless clusters is enabled by running the advanced privilege command:

   ```
   network options detect-switchless-cluster show
   ```

Show example

The following example output shows if the option is enabled.

```
cluster::*> network options detect-switchless-cluster show
   (network options detect-switchless-cluster show)
Enable Switchless Cluster Detection: true
```

If "Enable Switchless Cluster Detection" is `false`, contact NetApp support.

3. If AutoSupport is enabled on this cluster, suppress automatic case creation by invoking an AutoSupport message:

   `system node autosupport invoke -node * -type all -message MAINT=<number_of_hours>h`

   where `h` is the duration of the maintenance window in hours. The message notifies technical support of this maintenance task so that they can suppress automatic case creation during the maintenance window.

   In the following example, the command suppresses automatic case creation for two hours:

   Show example

   ```
   cluster::*> system node autosupport invoke -node * -type all
   -message MAINT=2h
   ```

Step 2: Configure ports and cabling

1. Organize the cluster ports on each switch into groups so that the cluster ports in group1 go to cluster switch1 and the cluster ports in group2 go to cluster switch2. These groups are required later in the procedure.
2. Identify the cluster ports and verify link status and health:

   `network port show -ipspace Cluster`

   In the following example for nodes with cluster ports "e0a" and "e0b", one group is identified as “node1:e0a” and “node2:e0a” and the other group as “node1:e0b” and “node2:e0b”. Your nodes might be using different cluster ports because they vary by system.

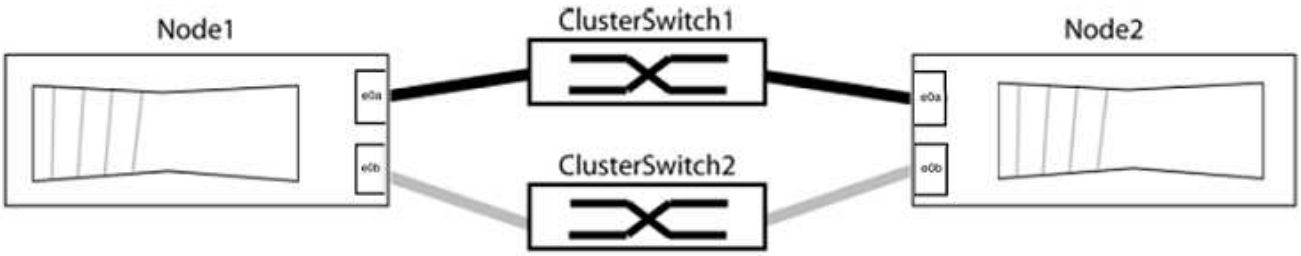

Verify that the ports have a value of `up` for the “Link” column and a value of `healthy` for the “Health Status” column.

Show example

```
cluster::> network port show -ipspace Cluster
Node: node1

Ignore
                                                  Speed(Mbps) Health
Health
Port  IPspace   Broadcast Domain Link  MTU   Admin/Oper  Status
Status
----- --------- ---------------- ----- ----- ----------- -------
-------
e0a   Cluster   Cluster          up    9000  auto/10000  healthy
false
e0b   Cluster   Cluster          up    9000  auto/10000  healthy
false

Node: node2

Ignore
                                                  Speed(Mbps) Health
Health
Port  IPspace   Broadcast Domain Link  MTU   Admin/Oper  Status
Status
----- --------- ---------------- ----- ----- ----------- -------
-------
e0a   Cluster   Cluster          up    9000  auto/10000  healthy
false
e0b   Cluster   Cluster          up    9000  auto/10000  healthy
false
4 entries were displayed.
```

3. Confirm that all the cluster LIFs are on their home ports.

Verify that the “is-home” column is `true` for each of the cluster LIFs:

```
network interface show -vserver Cluster -fields is-home
```

Show example

```
cluster::*> net int show -vserver Cluster -fields is-home
(network interface show)
vserver  lif          is-home
-------- ------------ --------
Cluster  node1_clus1  true
Cluster  node1_clus2  true
Cluster  node2_clus1  true
Cluster  node2_clus2  true
4 entries were displayed.
```

If there are cluster LIFs that are not on their home ports, revert those LIFs to their home ports:

```
network interface revert -vserver Cluster -lif *
```

4. Disable auto-revert for the cluster LIFs:

   ```
   network interface modify -vserver Cluster -lif * -auto-revert false
   ```

5. Verify that all ports listed in the previous step are connected to a network switch:

   ```
   network device-discovery show -port cluster_port
   ```

   The “Discovered Device” column should be the name of the cluster switch that the port is connected to.

Show example

The following example shows that cluster ports "e0a" and "e0b" are correctly connected to cluster switches "cs1" and "cs2".

```
cluster::> network device-discovery show -port e0a|e0b
  (network device-discovery show)
Node/     Local  Discovered
Protocol  Port   Device (LLDP: ChassisID)  Interface  Platform
--------- ------ ------------------------- ---------- ----------
node1/cdp
          e0a    cs1                       0/11       BES-53248
          e0b    cs2                       0/12       BES-53248
node2/cdp
          e0a    cs1                       0/9        BES-53248
          e0b    cs2                       0/9        BES-53248
4 entries were displayed.
```

6. Verify the connectivity of the remote cluster interfaces:

ONTAP 9.9.1 and later

You can use the `network interface check cluster-connectivity` command to start an accessibility check for cluster connectivity and then display the details:

`network interface check cluster-connectivity start` and `network interface check cluster-connectivity show`

```
cluster1::*> network interface check cluster-connectivity start
```

NOTE: Wait for a number of seconds before running the `show` command to display the details.

```
cluster1::*> network interface check cluster-connectivity show
                                  Source           Destination
Packet
Node   Date                       LIF              LIF
Loss
------ -------------------------- ---------------- ----------------
-----------
node1
       3/5/2022 19:21:18 -06:00   node1_clus2      node2-clus1
none
       3/5/2022 19:21:20 -06:00   node1_clus2      node2_clus2
none
node2
       3/5/2022 19:21:18 -06:00   node2_clus2      node1_clus1
none
       3/5/2022 19:21:20 -06:00   node2_clus2      node1_clus2
none
```

All ONTAP releases

For all ONTAP releases, you can also use the `cluster ping-cluster -node <name>` command to check the connectivity:

```
cluster ping-cluster -node <name>
```

```
cluster1::*> cluster ping-cluster -node local
Host is node2
Getting addresses from network interface table...
Cluster node1_clus1 169.254.209.69 node1 e0a
Cluster node1_clus2 169.254.49.125 node1 e0b
Cluster node2_clus1 169.254.47.194 node2 e0a
Cluster node2_clus2 169.254.19.183 node2 e0b
Local = 169.254.47.194 169.254.19.183
Remote = 169.254.209.69 169.254.49.125
Cluster Vserver Id = 4294967293
Ping status:

Basic connectivity succeeds on 4 path(s)
Basic connectivity fails on 0 path(s)

Detected 9000 byte MTU on 4 path(s):
Local 169.254.47.194 to Remote 169.254.209.69
Local 169.254.47.194 to Remote 169.254.49.125
Local 169.254.19.183 to Remote 169.254.209.69
Local 169.254.19.183 to Remote 169.254.49.125
Larger than PMTU communication succeeds on 4 path(s)
RPC status:
2 paths up, 0 paths down (tcp check)
2 paths up, 0 paths down (udp check)
```

7. Verify that the cluster is healthy:

   ```
   cluster ring show
   ```

   All units must be either master or secondary.

8. Set up the switchless configuration for the ports in group 1.

   To avoid potential networking issues, you must disconnect the ports from group1 and reconnect them back-to-back as quickly as possible, for example, **in less than 20 seconds**.

   a. Disconnect all the cables from the ports in group1 at the same time.

      In the following example, the cables are disconnected from port "e0a" on each node, and cluster traffic continues through the switch and port "e0b" on each node:

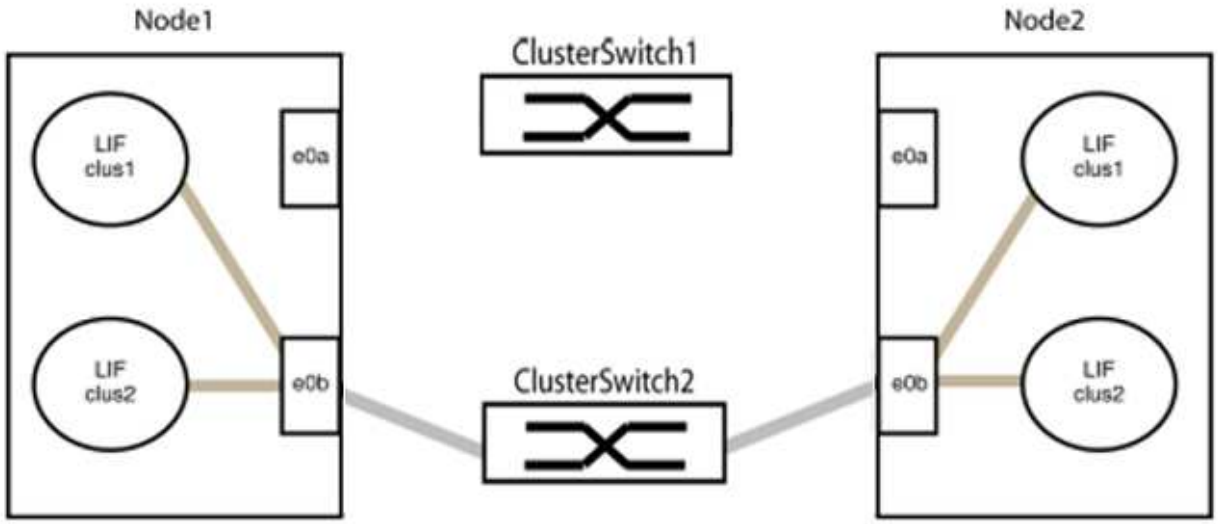

b. Cable the ports in group1 back-to-back.

In the following example, "e0a" on node1 is connected to "e0a" on node2:

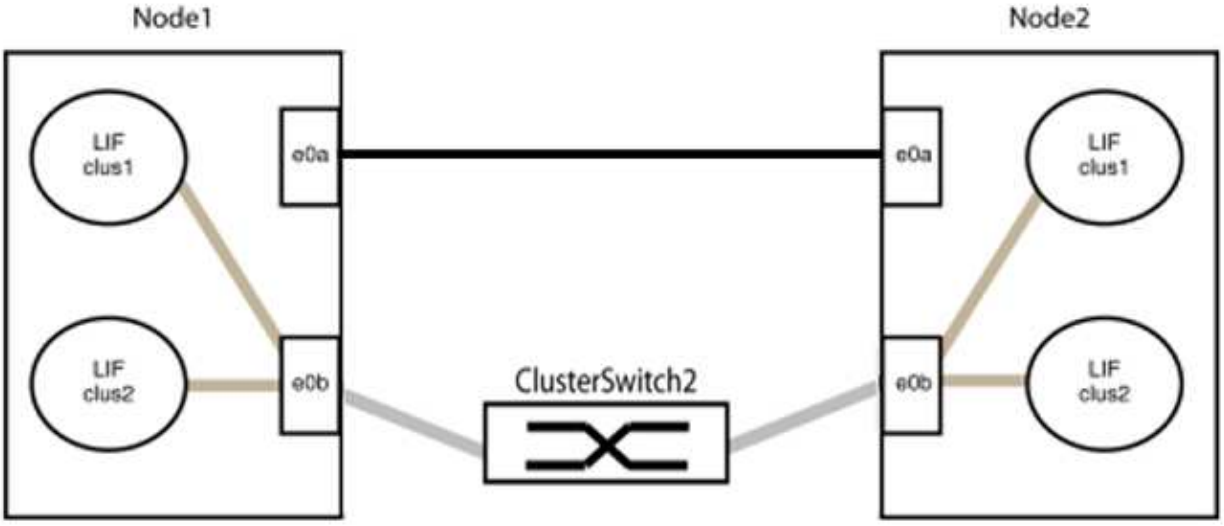

9. The switchless cluster network option transitions from `false` to `true`. This might take up to 45 seconds. Confirm that the switchless option is set to `true`:

```
network options switchless-cluster show
```

The following example shows that the switchless cluster is enabled:

```
cluster::*> network options switchless-cluster show
Enable Switchless Cluster: true
```

10. Verify the connectivity of the remote cluster interfaces:

ONTAP 9.9.1 and later

You can use the `network interface check cluster-connectivity` command to start an accessibility check for cluster connectivity and then display the details:

`network interface check cluster-connectivity start` and `network interface check cluster-connectivity show`

```
cluster1::*> network interface check cluster-connectivity start
```

NOTE: Wait for a number of seconds before running the `show` command to display the details.

```
cluster1::*> network interface check cluster-connectivity show
                                  Source           Destination
Packet
Node   Date                       LIF              LIF
Loss
------ -------------------------- ---------------- ----------------
-----------
node1
       3/5/2022 19:21:18 -06:00   node1_clus2      node2-clus1
none
       3/5/2022 19:21:20 -06:00   node1_clus2      node2_clus2
none
node2
       3/5/2022 19:21:18 -06:00   node2_clus2      node1_clus1
none
       3/5/2022 19:21:20 -06:00   node2_clus2      node1_clus2
none
```

All ONTAP releases

For all ONTAP releases, you can also use the `cluster ping-cluster -node <name>` command to check the connectivity:

```
cluster ping-cluster -node <name>
```

```
cluster1::*> cluster ping-cluster -node local
Host is node2
Getting addresses from network interface table...
Cluster node1_clus1 169.254.209.69 node1 e0a
Cluster node1_clus2 169.254.49.125 node1 e0b
Cluster node2_clus1 169.254.47.194 node2 e0a
Cluster node2_clus2 169.254.19.183 node2 e0b
Local = 169.254.47.194 169.254.19.183
Remote = 169.254.209.69 169.254.49.125
Cluster Vserver Id = 4294967293
Ping status:

Basic connectivity succeeds on 4 path(s)
Basic connectivity fails on 0 path(s)

Detected 9000 byte MTU on 4 path(s):
Local 169.254.47.194 to Remote 169.254.209.69
Local 169.254.47.194 to Remote 169.254.49.125
Local 169.254.19.183 to Remote 169.254.209.69
Local 169.254.19.183 to Remote 169.254.49.125
Larger than PMTU communication succeeds on 4 path(s)
RPC status:
2 paths up, 0 paths down (tcp check)
2 paths up, 0 paths down (udp check)
```

Before proceeding to the next step, you must wait at least two minutes to confirm a working back-to-back connection on group 1.

11. Set up the switchless configuration for the ports in group 2.

To avoid potential networking issues, you must disconnect the ports from group2 and reconnect them back-to-back as quickly as possible, for example, **in less than 20 seconds**.

a. Disconnect all the cables from the ports in group2 at the same time.

In the following example, the cables are disconnected from port "e0b" on each node, and cluster traffic continues through the direct connection between the "e0a" ports:

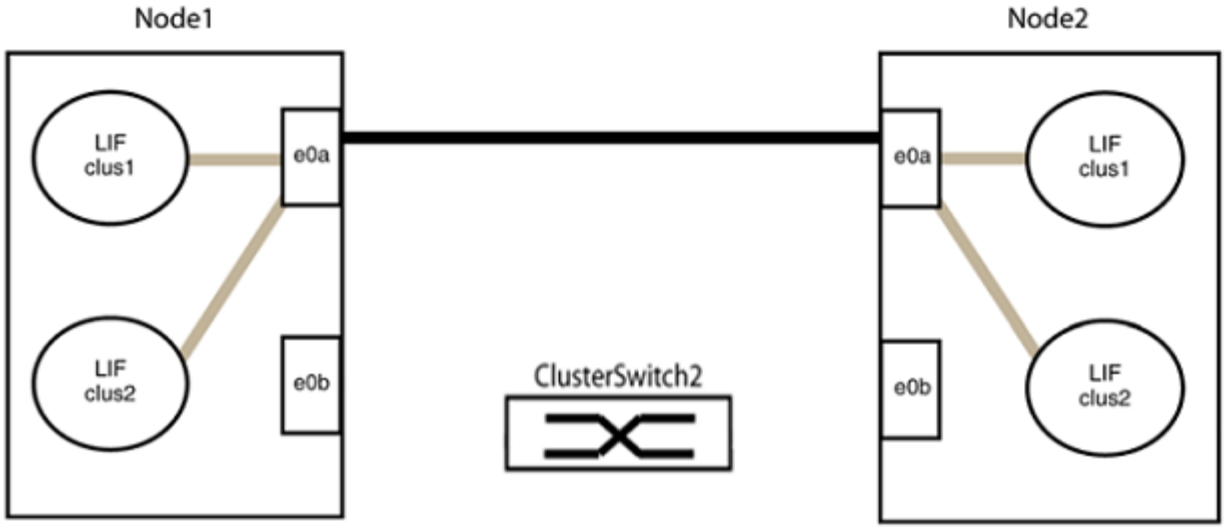

b. Cable the ports in group2 back-to-back.

   In the following example, "e0a" on node1 is connected to "e0a" on node2 and "e0b" on node1 is connected to "e0b" on node2:

Step 3: Verify the configuration

1. Verify that the ports on both nodes are correctly connected:

   `network device-discovery show -port` *`cluster_port`*

Show example

The following example shows that cluster ports "e0a" and "e0b" are correctly connected to the corresponding port on the cluster partner:

```
cluster::> net device-discovery show -port e0a|e0b
  (network device-discovery show)
Node/      Local  Discovered
Protocol   Port   Device (LLDP: ChassisID)  Interface  Platform
---------- ------ ------------------------- ---------- ----------
node1/cdp
           e0a    node2                     e0a        AFF-A300
           e0b    node2                     e0b        AFF-A300
node1/lldp
           e0a    node2 (00:a0:98:da:16:44) e0a        -
           e0b    node2 (00:a0:98:da:16:44) e0b        -
node2/cdp
           e0a    node1                     e0a        AFF-A300
           e0b    node1                     e0b        AFF-A300
node2/lldp
           e0a    node1 (00:a0:98:da:87:49) e0a        -
           e0b    node1 (00:a0:98:da:87:49) e0b        -
8 entries were displayed.
```

2. Re-enable auto-revert for the cluster LIFs:

   `network interface modify -vserver Cluster -lif * -auto-revert true`

3. Verify that all LIFs are home. This might take a few seconds.

   `network interface show -vserver Cluster -lif` *`lif_name`*

Show example

The LIFs have been reverted if the “Is Home” column is `true`, as shown for `node1_clus2` and `node2_clus2` in the following example:

```
cluster::> network interface show -vserver Cluster -fields curr-
port,is-home
vserver  lif           curr-port is-home
-------- ------------- --------- -------
Cluster  node1_clus1   e0a       true
Cluster  node1_clus2   e0b       true
Cluster  node2_clus1   e0a       true
Cluster  node2_clus2   e0b       true
4 entries were displayed.
```

If any cluster LIFS have not returned to their home ports, revert them manually from the local node:

`network interface revert -vserver Cluster -lif` *`lif_name`*

4. Check the cluster status of the nodes from the system console of either node:

   `cluster show`

   Show example

   The following example shows epsilon on both nodes to be `false`:

   ```
   Node  Health  Eligibility Epsilon
   ----- ------- ----------- --------
   node1 true    true        false
   node2 true    true        false
   2 entries were displayed.
   ```

5. Verify the connectivity of the remote cluster interfaces:

ONTAP 9.9.1 and later

You can use the `network interface check cluster-connectivity` command to start an accessibility check for cluster connectivity and then display the details:

`network interface check cluster-connectivity start` and `network interface check cluster-connectivity show`

```
cluster1::*> network interface check cluster-connectivity start
```

NOTE: Wait for a number of seconds before running the `show` command to display the details.

```
cluster1::*> network interface check cluster-connectivity show
                                  Source           Destination
Packet
Node   Date                       LIF              LIF
Loss
------ -------------------------- ---------------- ----------------
-----------
node1
       3/5/2022 19:21:18 -06:00   node1_clus2      node2-clus1
none
       3/5/2022 19:21:20 -06:00   node1_clus2      node2_clus2
none
node2
       3/5/2022 19:21:18 -06:00   node2_clus2      node1_clus1
none
       3/5/2022 19:21:20 -06:00   node2_clus2      node1_clus2
none
```

All ONTAP releases

For all ONTAP releases, you can also use the `cluster ping-cluster -node <name>` command to check the connectivity:

```
cluster ping-cluster -node <name>
```

```
cluster1::*> cluster ping-cluster -node local
Host is node2
Getting addresses from network interface table...
Cluster node1_clus1 169.254.209.69 node1 e0a
Cluster node1_clus2 169.254.49.125 node1 e0b
Cluster node2_clus1 169.254.47.194 node2 e0a
Cluster node2_clus2 169.254.19.183 node2 e0b
Local = 169.254.47.194 169.254.19.183
Remote = 169.254.209.69 169.254.49.125
Cluster Vserver Id = 4294967293
Ping status:

Basic connectivity succeeds on 4 path(s)
Basic connectivity fails on 0 path(s)

Detected 9000 byte MTU on 4 path(s):
Local 169.254.47.194 to Remote 169.254.209.69
Local 169.254.47.194 to Remote 169.254.49.125
Local 169.254.19.183 to Remote 169.254.209.69
Local 169.254.19.183 to Remote 169.254.49.125
Larger than PMTU communication succeeds on 4 path(s)
RPC status:
2 paths up, 0 paths down (tcp check)
2 paths up, 0 paths down (udp check)
```

6. If you suppressed automatic case creation, reenable it by invoking an AutoSupport message:

   ```
   system node autosupport invoke -node * -type all -message MAINT=END
   ```

   For more information, see NetApp KB Article 1010449: How to suppress automatic case creation during scheduled maintenance windows.

7. Change the privilege level back to admin:

   ```
   set -privilege admin
   ```

NetApp CN1610

Overview of installation and configuration for NetApp CN1610 switches

The CN1610 is a high bandwidth, managed Layer 2 switch that provides 16 10-Gigabit Small Form-Factor Pluggable Plus (SFP+) ports.

The switch includes redundant power supplies and fan trays that support hot swapping for high availability. This 1U switch can be installed in a standard 19-inch NetApp 42U system cabinet or third-party cabinet.

The switch supports local management through the console port or remote management by using Telnet or SSH through a network connection. The CN1610 includes a dedicated 1-Gigabit Ethernet RJ45 management port for out-of-band switch management. You can manage the switch by entering commands into the command-line interface (CLI) or by using an SNMP-based network management system (NMS).

Install and configure workflow for NetApp CN1610 switches

To install and configure a NetApp CN1610 switch on systems running ONTAP, follow these steps:

1. Install hardware
2. Install FASTPATH software
3. Install Reference Configuration file

   If the switches are running ONTAP 8.3.1 or later, follow the instructions in Install FASTPATH and RCFs on switches running ONTAP 8.3.1 and later.

4. Configure switch

Documentation requirements for NetApp CN1610 switches

For NetApp CN1610 switch installation and maintenance, be sure to review all the recommended documentation.

Document title	Description
1G Installation Guide	An overview of the CN1601 switch hardware and software features and installation process.
10G Installation Guide	An overview of the CN1610 switch hardware and software features and describes the features to install the switch and access the CLI.
CN1601 and CN1610 Switch Setup and Configuration Guide	Details how to configure the switch hardware and software for your cluster environment.
CN1601 Switch Administrator's Guide	Provides examples of how to use the CN1601 switch in a typical network. • Administrator's Guide • Administrator's Guide, Version 1.1.x.x • Administrator's Guide, Version 1.2.x.x
CN1610 Network Switch CLI Command Reference	Provides detailed information about the command-line interface (CLI) commands you use to configure the CN1601 software. • Command Reference • Command Reference, Version 1.1.x.x • Command Reference, Version 1.2.x.x

Install and configure

Install the hardware for the NetApp CN1610 switch

To install the NetApp CN1610 switch hardware, use the instructions in one of the following guides.

- 1G Installation Guide.

  An overview of the CN1601 switch hardware and software features and installation process.

- 10G Installation Guide

  An overview of the CN1610 switch hardware and software features and describes the features to install the switch and access the CLI.

Install FASTPATH software

When you install the FASTPATH software on your NetApp switches, you must begin the upgrade with the second switch, *cs2*.

Review requirements

Before you begin

Make sure you have the following:

- A current backup of the switch configuration.
- A fully functioning cluster (no errors in the logs and no defective cluster network interface cards (NICs) or similar issues).
- Fully functional port connections on the cluster switch.
- All cluster ports set up.
- All cluster logical interfaces (LIFs) set up (must not have been migrated).
- A successful communication path: The ONTAP (privilege: advanced) `cluster ping-cluster -node node1` command must indicate that `larger than PMTU communication` is successful on all paths.
- A supported version of FASTPATH and ONTAP.

  Make sure you consult the switch compatibility table on the NetApp CN1601 and CN1610 Switches page for the supported FASTPATH and ONTAP versions.

Install FASTPATH

The following procedure uses the clustered Data ONTAP 8.2 syntax. As a result, the cluster Vserver, LIF names, and CLI output are different than those in Data ONTAP 8.3.

There can be command dependencies between command syntax in the RCF and FASTPATH versions.

About the examples

The examples in this procedure use the following switch and node nomenclature:

- The two NetApp switches are cs1 and cs2.

- The two cluster LIFs are clus1 and clus2.
- The Vservers are vs1 and vs2.
- The `cluster::*>` prompt indicates the name of the cluster.
- The cluster ports on each node are named e1a and e2a.

  Hardware Universe has more information about the actual cluster ports that are supported on your platform.

- The supported Inter-Switch Links (ISLs) are ports 0/13 through 0/16.
- The supported node connections are ports 0/1 through 0/12.

Step 1: Migrate cluster

1. If AutoSupport is enabled on this cluster, suppress automatic case creation by invoking an AutoSupport message:

   `system node autosupport invoke -node * -type all - message MAINT=xh`

   x is the duration of the maintenance window in hours.

   > The AutoSupport message notifies technical support of this maintenance task so that automatic case creation is suppressed during the maintenance window.

2. Log into the switch as admin. There is no password by default. At the `(cs2) #` prompt, enter the `enable` command. Again, there is no password by default. This gives you access to Privileged EXEC mode, which allows you to configure the network interface.

   Show example

   ```
   (cs2) # enable
   Password (Enter)
   (cs2) #
   ```

3. On the console of each node, migrate clus2 to port e1a:

   `network interface migrate`

   Show example

   ```
   cluster::*> network interface migrate -vserver vs1 -lif clus2
   -destnode node1 -dest-port e1a
   cluster::*> network interface migrate -vserver vs2 -lif clus2
   -destnode node2 -dest-port e1a
   ```

4. On the console of each node, verify that the migration took place:

```
network interface show
```

The following example shows that clus2 has migrated to port e1a on both nodes:

Show example

```
cluster::*> network interface show -role cluster

         Logical    Status     Network        Current  Current  Is
Vserver  Interface  Admin/Open Address/Mask   Node     Port     Home
-------- ---------- ---------- -------------- -------- -------  ----
vs1
         clus1      up/up      10.10.10.1/16  node1    e1a      true
         clus2      up/up      10.10.10.2/16  node1    e1a
false
vs2
         clus1      up/up      10.10.10.1/16  node2    e1a      true
         clus2      up/up      10.10.10.2/16  node2    e1a
false
```

Step 2: Install FASTPATH software

1. Shut down cluster port e2a on both nodes:

   ```
   network port modify
   ```

   Show example

   The following example shows port e2a being shut down on both nodes:

   ```
   cluster::*> network port modify -node node1 -port e2a -up-admin
   false
   cluster::*> network port modify -node node2 -port e2a -up-admin
   false
   ```

2. Verify that port e2a is shut down on both nodes:

   ```
   network port show
   ```

Show example

```
cluster::*> network port show -role cluster

                                  Auto-Negot  Duplex      Speed
(Mbps)
Node   Port Role     Link MTU    Admin/Oper  Admin/Oper  Admin/Oper
------ ---- -------- ---- -----  ----------  ----------
------------
node1
       e1a  cluster  up   9000   true/true   full/full   auto/10000
       e2a  cluster  down 9000   true/true   full/full   auto/10000
node2
       e1a  cluster  up   9000   true/true   full/full   auto/10000
       e2a  cluster  down 9000   true/true   full/full   auto/10000
```

3. Shut down the Inter-Switch Link (ISL) ports on cs1, the active NetApp switch:

Show example

```
(cs1) # configure
(cs1)(config) # interface 0/13-0/16
(cs1)(Interface 0/13-0/16) # shutdown
(cs1)(Interface 0/13-0/16) # exit
(cs1)(config) # exit
```

4. Back up the current active image on cs2.

Show example

```
(cs2) # show bootvar

 Image Descriptions   .

  active:
  backup:

 Images currently available on Flash

--------------------------------------------------------------------
--
 unit        active       backup     current-active       next-
active
--------------------------------------------------------------------
--

    1        1.1.0.3      1.1.0.1          1.1.0.3           1.1.0.3

(cs2) # copy active backup
Copying active to backup
Copy operation successful

(cs2) #
```

5. Download the image file to the switch.

   Copying the image file to the active image means that when you reboot, that image establishes the running FASTPATH version. The previous image remains available as a backup.

Show example

```
(cs2) # copy tftp://10.0.0.1/NetApp_CN1610_1.1.0.5.stk active


Mode..................................... TFTP
Set Server IP............................ 10.0.0.1
Path..................................... ./
Filename................................. NetApp_CN1610_1.1.0.5.stk
Data Type................................ Code
Destination Filename..................... active

Management access will be blocked for the duration of the transfer
Are you sure you want to start? (y/n) y
TFTP Code transfer starting...


File transfer operation completed successfully.
```

6. Verify the running version of the FASTPATH software.

   `show version`

Show example

```
(cs2) # show version

Switch: 1

System Description.................. Broadcom Scorpion 56820
                                     Development System - 16 TENGIG,
                                     1.1.0.3, Linux 2.6.21.7
Machine Type........................ Broadcom Scorpion 56820
                                     Development System - 16TENGIG
Machine Model....................... BCM-56820
Serial Number....................... 10611100004
FRU Number.........................
Part Number......................... BCM56820
Maintenance Level................... A
Manufacturer........................ 0xbc00
Burned In MAC Address............... 00:A0:98:4B:A9:AA
Software Version.................... 1.1.0.3
Operating System.................... Linux 2.6.21.7
Network Processing Device........... BCM56820_B0
Additional Packages................. FASTPATH QOS
                                     FASTPATH IPv6 Management
```

7. View the boot images for the active and backup configuration.

   `show bootvar`

Show example

```
(cs2) # show bootvar

Image Descriptions

 active :
 backup :

 Images currently available on Flash

--------------------------------------------------------------------
--
 unit        active       backup     current-active       next-
active
--------------------------------------------------------------------
--

    1        1.1.0.3      1.1.0.3          1.1.0.3           1.1.0.5
```

8. Reboot the switch.

   `reload`

   Show example

```
(cs2) # reload

Are you sure you would like to reset the system? (y/n)  y

System will now restart!
```

Step 3: Validate installation

1. Log in again, and verify the new version of the FASTPATH software.

   `show version`

Show example

```
(cs2) # show version

Switch: 1

System Description..................... Broadcom Scorpion 56820
                                        Development System - 16
TENGIG,
                                        1.1.0.5, Linux 2.6.21.7
Machine Type........................... Broadcom Scorpion 56820
                                        Development System - 16TENGIG
Machine Model.......................... BCM-56820
Serial Number.......................... 10611100004
FRU Number............................
Part Number............................ BCM56820
Maintenance Level...................... A
Manufacturer........................... 0xbc00
Burned In MAC Address.................. 00:A0:98:4B:A9:AA
Software Version....................... 1.1.0.5
Operating System....................... Linux 2.6.21.7
Network Processing Device.............. BCM56820_B0
Additional Packages.................... FASTPATH QOS
                                        FASTPATH IPv6 Management
```

2. Bring up the ISL ports on cs1, the active switch.

   `configure`

   Show example

```
(cs1) # configure
(cs1) (config) # interface 0/13-0/16
(cs1) (Interface 0/13-0/16) # no shutdown
(cs1) (Interface 0/13-0/16) # exit
(cs1) (config) # exit
```

3. Verify that the ISLs are operational:

   `show port-channel 3/1`

   The Link State field should indicate `Up`.

Show example

```
(cs2) # show port-channel 3/1

Local Interface................................ 3/1
Channel Name................................... ISL-LAG
Link State..................................... Up
Admin Mode..................................... Enabled
Type........................................... Static
Load Balance Option............................ 7
(Enhanced hashing mode)

Mbr    Device/       Port      Port
Ports  Timeout       Speed     Active
------ ------------- --------- -------
0/13   actor/long    10G Full  True
       partner/long
0/14   actor/long    10G Full  True
       partner/long
0/15   actor/long    10G Full  True
       partner/long
0/16   actor/long    10G Full  True
       partner/long
```

4. Copy the `running-config` file to the `startup-config` file when you are satisfied with the software versions and switch settings.

Show example

```
(cs2) # write memory

This operation may take a few minutes.
Management interfaces will not be available during this time.

Are you sure you want to save? (y/n) y

Config file 'startup-config' created successfully .

Configuration Saved!
```

5. Enable the second cluster port, e2a, on each node:

`network port modify`

Show example

```
cluster::*> network port modify -node node1 -port e2a -up-admin true
cluster::*> **network port modify -node node2 -port e2a -up-admin
true**
```

6. Revert clus2 that is associated with port e2a:

   `network interface revert`

   The LIF might revert automatically, depending on your version of ONTAP software.

   Show example

```
cluster::*> network interface revert -vserver Cluster -lif n1_clus2
cluster::*> network interface revert -vserver Cluster -lif n2_clus2
```

7. Verify that the LIF is now home (`true`) on both nodes:

   `network interface show -role cluster`

   Show example

```
cluster::*> network interface show -role cluster

          Logical    Status     Network         Current  Current Is
Vserver   Interface  Admin/Oper Address/Mask    Node     Port    Home
--------  ---------- ---------- --------------- -------- ------- ----
vs1
          clus1      up/up      10.10.10.1/24   node1    e1a     true
          clus2      up/up      10.10.10.2/24   node1    e2a     true
vs2
          clus1      up/up      10.10.10.1/24   node2    e1a     true
          clus2      up/up      10.10.10.2/24   node2    e2a     true
```

8. View the status of the nodes:

   `cluster show`

Show example

```
cluster::> cluster show

Node                  Health  Eligibility
--------------------- ------- ------------
node1                 true    true
node2                 true    true
```

9. Repeat the previous steps to install the FASTPATH software on the other switch, cs1.
10. If you suppressed automatic case creation, re-enable it by invoking an AutoSupport message:

```
system node autosupport invoke -node * -type all -message MAINT=END
```

Install a Reference Configuration File on a CN1610 switch

Follow this procedure to install a Reference Configuration File (RCF).

Before installing an RCF, you must first migrate the cluster LIFs away from switch cs2. After the RCF is installed and validated, the LIFs can be migrated back.

Review requirements

Before you begin

Make sure you have the following:

- A current backup of the switch configuration.
- A fully functioning cluster (no errors in the logs and no defective cluster network interface cards (NICs) or similar issues).
- Fully functional port connections on the cluster switch.
- All cluster ports set up.
- All cluster logical interfaces (LIFs) set up.
- A successful communication path: The ONTAP (privilege: advanced) `cluster ping-cluster -node node1` command must indicate that `larger than PMTU communication` is successful on all paths.
- A supported version of RCF and ONTAP.

  Make sure you consult the switch compatibility table on the NetApp CN1601 and CN1610 Switches page for the supported RCF and ONTAP versions.

Install the RCF

The following procedure uses the clustered Data ONTAP 8.2 syntax. As a result, the cluster Vserver, LIF names, and CLI output are different than those in Data ONTAP 8.3.

There can be command dependencies between command syntax in the RCF and FASTPATH versions.

In RCF version 1.2, support for Telnet has been explicitly disabled because of security concerns. To avoid connectivity issues while installing RCF 1.2, verify that Secure Shell (SSH) is enabled. The NetApp CN1610 Switch Administrator's Guide has more information about SSH.

About the examples

The examples in this procedure use the following switch and node nomenclature:

- The two NetApp switches are cs1 and cs2.
- The two cluster LIFs are clus1 and clus2.
- The Vservers are vs1 and vs2.
- The `cluster::*>` prompt indicates the name of the cluster.
- The cluster ports on each node are named e1a and e2a.

  Hardware Universe has more information about the actual cluster ports that are supported on your platform.

- The supported Inter-Switch Links (ISLs) are ports 0/13 through 0/16.
- The supported node connections are ports 0/1 through 0/12.
- A supported version of FASTPATH, RCF, and ONTAP.

  Make sure you consult the switch compatibility table on the NetApp CN1601 and CN1610 Switches page for the supported FASTPATH, RCF, and ONTAP versions.

Step 1: Migrate cluster

1. Save your current switch configuration information:

   `write memory`

   Show example

   The following example shows the current switch configuration being saved to the startup configuration (`startup-config`) file on switch cs2:

   ```
   (cs2) # write memory
   This operation may take a few minutes.
   Management interfaces will not be available during this time.

   Are you sure you want to save? (y/n) y

   Config file 'startup-config' created successfully.

   Configuration Saved!
   ```

2. On the console of each node, migrate clus2 to port e1a:

`network interface migrate`

Show example

```
cluster::*> network interface migrate -vserver vs1 -lif clus2
-source-node node1 -destnode node1 -dest-port e1a

cluster::*> network interface migrate -vserver vs2 -lif clus2
-source-node node2 -destnode node2 -dest-port e1a
```

3. On the console of each node, verify that the migration occurred:

`network interface show -role cluster`

Show example

The following example shows that clus2 has migrated to port e1a on both nodes:

```
cluster::*> network port show -role cluster
         clus1      up/up      10.10.10.1/16   node2    e1a     true
         clus2      up/up      10.10.10.2/16   node2    e1a
false
```

4. Shut down port e2a on both nodes:

`network port modify`

Show example

The following example shows port e2a being shut down on both nodes:

```
cluster::*> network port modify -node node1 -port e2a -up-admin
false
cluster::*> network port modify -node node2 -port e2a -up-admin
false
```

5. Verify that port e2a is shut down on both nodes:

`network port show`

Show example

```
cluster::*> network port show -role cluster

                                   Auto-Negot  Duplex      Speed
(Mbps)
Node   Port   Role     Link MTU   Admin/Oper  Admin/Oper  Admin/Oper
------ ------ -------- ---- ----- ----------- ----------
-----------
node1
       e1a    cluster  up   9000  true/true   full/full   auto/10000
       e2a    cluster  down 9000  true/true   full/full   auto/10000
node2
       e1a    cluster  up   9000  true/true   full/full   auto/10000
       e2a    cluster  down 9000  true/true   full/full   auto/10000
```

6. Shut down the ISL ports on cs1, the active NetApp switch.

Show example

```
(cs1) # configure
(cs1) (config) # interface 0/13-0/16
(cs1) (interface 0/13-0/16) # shutdown
(cs1) (interface 0/13-0/16) # exit
(cs1) (config) # exit
```

Step 2: Install RCF

1. Copy the RCF to the switch.

> You must set the `.scr` extension as part of the file name before invoking the script. This extension is the extension for the FASTPATH operating system.

The switch will validate the script automatically as it is downloaded to the switch, and the output will go to the console.

Show example

```
(cs2) # copy tftp://10.10.0.1/CN1610_CS_RCF_v1.1.txt nvram:script
CN1610_CS_RCF_v1.1.scr

[the script is now displayed line by line]
Configuration script validated.
File transfer operation completed successfully.
```

2. Verify that the script was downloaded and saved with the file name that you gave it.

Show example

```
(cs2) # script list
Configuration Script Name        Size(Bytes)
-------------------------------- -----------
running-config.scr               6960
CN1610_CS_RCF_v1.1.scr           2199

2 configuration script(s) found.
6038 Kbytes free.
```

3. Validate the script.

The script is validated during the download to verify that each line is a valid switch command line.

Show example

```
(cs2) # script validate CN1610_CS_RCF_v1.1.scr
[the script is now displayed line by line]
Configuration script 'CN1610_CS_RCF_v1.1.scr' validated.
```

4. Apply the script to the switch.

Show example

```
(cs2) #script apply CN1610_CS_RCF_v1.1.scr

Are you sure you want to apply the configuration script? (y/n) y
[the script is now displayed line by line]...

Configuration script 'CN1610_CS_RCF_v1.1.scr' applied.
```

5. Verify that your changes have been implemented on the switch.

```
(cs2) # show running-config
```

The example displays the `running-config` file on the switch. You must compare the file to the RCF to verify that the parameters that you set are as you expect.

6. Save the changes.
7. Set the `running-config` file to be the standard one.

Show example

```
(cs2) # write memory
This operation may take a few minutes.
Management interfaces will not be available during this time.

Are you sure you want to save? (y/n) y

Config file 'startup-config' created successfully.
```

8. Reboot the switch and verify that the `running-config` file is correct.

After the reboot completes, you must log in, view the `running-config` file, and then look for the description on interface 3/64, which is the version label for the RCF.

Show example

```
(cs2) # reload

The system has unsaved changes.
Would you like to save them now? (y/n) y


Config file 'startup-config' created successfully.
Configuration Saved!
System will now restart!
```

9. Bring up the ISL ports on cs1, the active switch.

Show example

```
(cs1) # configure
(cs1) (config)# interface 0/13-0/16
(cs1) (Interface 0/13-0/16)# no shutdown
(cs1) (Interface 0/13-0/16)# exit
(cs1) (config)# exit
```

10. Verify that the ISLs are operational:

`show port-channel 3/1`

The Link State field should indicate `Up`.

Show example

```
(cs2) # show port-channel 3/1

Local Interface................................ 3/1
Channel Name................................... ISL-LAG
Link State..................................... Up
Admin Mode..................................... Enabled
Type........................................... Static
Load Balance Option............................ 7
(Enhanced hashing mode)

Mbr    Device/       Port      Port
Ports  Timeout       Speed     Active
------ ------------- --------- -------
0/13   actor/long    10G Full  True
       partner/long
0/14   actor/long    10G Full  True
       partner/long
0/15   actor/long    10G Full  True
       partner/long
0/16   actor/long    10G Full  True
       partner/long
```

11. Bring up cluster port e2a on both nodes:

    `network port modify`

    Show example

    The following example shows port e2a being brought up on node1 and node2:

    ```
    cluster::*> network port modify -node node1 -port e2a -up-admin true
    cluster::*> network port modify -node node2 -port e2a -up-admin true
    ```

Step 3: Validate installation

1. Verify that port e2a is up on both nodes:

   `network port show -role cluster`

Show example

```
cluster::*> network port show -role cluster

                                  Auto-Negot  Duplex      Speed (Mbps)
Node   Port Role     Link MTU    Admin/Oper  Admin/Oper  Admin/Oper
------ ---- -------- ---- ----  ----------- ----------  ------------
node1
       e1a  cluster  up   9000  true/true   full/full   auto/10000
       e2a  cluster  up   9000  true/true   full/full   auto/10000
node2
       e1a  cluster  up   9000  true/true   full/full   auto/10000
       e2a  cluster  up   9000  true/true   full/full   auto/10000
```

2. On both nodes, revert clus2 that is associated with port e2a:

   `network interface revert`

   The LIF might revert automatically, depending on your version of ONTAP.

   Show example

   ```
   cluster::*> network interface revert -vserver node1 -lif clus2
   cluster::*> network interface revert -vserver node2 -lif clus2
   ```

3. Verify that the LIF is now home (`true`) on both nodes:

   `network interface show -role cluster`

   Show example

   ```
   cluster::*> network interface show -role cluster

           Logical    Status     Network         Current  Current Is
   Vserver Interface  Admin/Oper Address/Mask    Node     Port    Home
   ------- ---------- ---------- --------------- -------- ------- ----
   vs1
           clus1      up/up      10.10.10.1/24   node1    e1a     true
           clus2      up/up      10.10.10.2/24   node1    e2a     true
   vs2
           clus1      up/up      10.10.10.1/24   node2    e1a     true
           clus2      up/up      10.10.10.2/24   node2    e2a     true
   ```

4. View the status of the node members:

   `cluster show`

   Show example

   ```
   cluster::> cluster show

   Node           Health  Eligibility
   -------------- ------- ------------
   node1
                  true    true
   node2
                  true    true
   ```

5. Copy the `running-config` file to the `startup-config` file when you are satisfied with the software versions and switch settings.

   Show example

   ```
   (cs2) # write memory
   This operation may take a few minutes.
   Management interfaces will not be available during this time.

   Are you sure you want to save? (y/n) y

   Config file 'startup-config' created successfully.

   Configuration Saved!
   ```

6. Repeat the previous steps to install the RCF on the other switch, cs1.

What's next?

Configure switch health monitoring

Install FASTPATH software and RCFs for ONTAP 8.3.1 and later

Follow this procedure to install FASTPATH software and RCFs for ONTAP 8.3.1 and later.

The installation steps are the same for both NetApp CN1601 management switches and CN1610 cluster switches running ONTAP 8.3.1 or later. However, the two models require different software and RCFs.

Review requirements

Before you begin

Make sure you have the following:

- A current backup of the switch configuration.
- A fully functioning cluster (no errors in the logs and no defective cluster network interface cards (NICs) or similar issues).
- Fully functional port connections on the cluster switch.
- All cluster ports set up.
- All cluster logical interfaces (LIFs) set up (must not have been migrated).
- A successful communication path: The ONTAP (privilege: advanced) `cluster ping-cluster -node node1` command must indicate that `larger than PMTU communication` is successful on all paths.
- A supported version of FASTPATH, RCF, and ONTAP.

  Make sure you consult the switch compatibility table on the NetApp CN1601 and CN1610 Switches page for the supported FASTPATH, RCF, and ONTAP versions.

Install the FASTPATH software

The following procedure uses the clustered Data ONTAP 8.2 syntax. As a result, the cluster Vserver, LIF names, and CLI output are different than those in Data ONTAP 8.3.

There can be command dependencies between command syntax in the RCF and FASTPATH versions.

> In RCF version 1.2, support for Telnet has been explicitly disabled because of security concerns. To avoid connectivity issues while installing RCF 1.2, verify that Secure Shell (SSH) is enabled. The NetApp CN1610 Switch Administrator's Guide has more information about SSH.

About the examples

The examples in this procedure use the following switch and node nomenclature:

- The two NetApp switch names are cs1 and cs2.
- The cluster logical interface (LIF) names are node1_clus1 and node1_clus2 for node1, and node2_clus1 and node2_clus2 for node2. (You can have up to 24 nodes in a cluster.)
- The storage virtual machine (SVM) name is Cluster.
- The `cluster1::*>` prompt indicates the name of the cluster.
- The cluster ports on each node are named e0a and e0b.

  Hardware Universe has more information about the actual cluster ports that are supported on your platform.

- The supported Inter-Switch Links (ISLs) are ports 0/13 through 0/16.
- The supported node connections are ports 0/1 through 0/12.

Step 1: Migrate cluster

1. Display information about the network ports on the cluster:

   `network port show -ipspace cluster`

Show example

The following example shows the type of output from the command:

```
cluster1::> network port show -ipspace cluster
                                                                               Speed
(Mbps)
Node   Port      IPspace      Broadcast Domain Link   MTU
Admin/Oper
------ --------- ------------ ---------------- ----- -------
------------
node1
       e0a       Cluster      Cluster          up       9000
auto/10000
       e0b       Cluster      Cluster          up       9000
auto/10000
node2
       e0a       Cluster      Cluster          up       9000
auto/10000
       e0b       Cluster      Cluster          up       9000
auto/10000
4 entries were displayed.
```

2. Display information about the LIFs on the cluster:

   `network interface show -role cluster`

Show example

The following example shows the logical interfaces on the cluster. In this example the `-role` parameter displays information about the LIFs that are associated with cluster ports:

```
cluster1::> network interface show -role cluster
  (network interface show)
            Logical    Status     Network            Current
Current Is
Vserver     Interface  Admin/Oper Address/Mask       Node
Port    Home
----------- ---------- ---------- ------------------ -------------
------- ----
Cluster
            node1_clus1  up/up    10.254.66.82/16    node1
e0a     true
            node1_clus2  up/up    10.254.206.128/16  node1
e0b     true
            node2_clus1  up/up    10.254.48.152/16   node2
e0a     true
            node2_clus2  up/up    10.254.42.74/16    node2
e0b     true
4 entries were displayed.
```

3. On each respective node, using a node management LIF, migrate node1_clus2 to e0a on node1 and node2_clus2 to e0a on node2:

   `network interface migrate`

   You must enter the commands on the controller consoles that own the respective cluster LIFs.

   Show example

   ```
   cluster1::> network interface migrate -vserver Cluster -lif
   node1_clus2 -destination-node node1 -destination-port e0a
   cluster1::> network interface migrate -vserver Cluster -lif
   node2_clus2 -destination-node node2 -destination-port e0a
   ```

   For this command, the name of the cluster is case-sensitive and the command should be run on each node. It is not possible to run this command in the general cluster LIF.

4. Verify that the migration took place by using the `network interface show` command on a node.

Show example

The following example shows that clus2 has migrated to port e0a on nodes node1 and node2:

```
cluster1::> **network interface show -role cluster**
            Logical    Status     Network            Current
Current Is
Vserver     Interface  Admin/Oper Address/Mask       Node
Port    Home
----------- ---------- ---------- ------------------ -------------
------- ----
Cluster
            node1_clus1  up/up    10.254.66.82/16   node1
e0a     true
            node1_clus2  up/up    10.254.206.128/16 node1
e0a     false
            node2_clus1  up/up    10.254.48.152/16  node2
e0a     true
            node2_clus2  up/up    10.254.42.74/16   node2
e0a     false
4 entries were displayed.
```

5. Change the privilege level to advanced, entering y when prompted to continue:

   `set -privilege advanced`

   The advanced prompt (*>) appears.

6. Shut down cluster port e0b on both nodes:

   `network port modify -node` *`node_name`* `-port` *`port_name`* `-up-admin false`

   You must enter the commands on the controller consoles that own the respective cluster LIFs.

   Show example

   The following example shows the commands to shut down port e0b on all nodes:

   ```
   cluster1::*> network port modify -node node1 -port e0b -up-admin
   false
   cluster1::*> network port modify -node node2 -port e0b -up-admin
   false
   ```

7. Verify that port e0b is shut down on both nodes:

```
network port show
```

Show example

```
cluster1::*> network port show -role cluster

                                                                   Speed
(Mbps)
Node   Port      IPspace      Broadcast Domain Link   MTU
Admin/Oper
------ --------- ------------ ---------------- ----- -------
------------
node1
       e0a       Cluster      Cluster          up       9000
auto/10000
       e0b       Cluster      Cluster          down     9000
auto/10000
node2
       e0a       Cluster      Cluster          up       9000
auto/10000
       e0b       Cluster      Cluster          down     9000
auto/10000
4 entries were displayed.
```

8. Shut down the Inter-Switch Link (ISL) ports on cs1.

Show example

```
(cs1) #configure
(cs1) (Config)#interface 0/13-0/16
(cs1) (Interface 0/13-0/16)#shutdown
(cs1) (Interface 0/13-0/16)#exit
(cs1) (Config)#exit
```

9. Back up the current active image on cs2.

Show example

```
(cs2) # show bootvar

 Image Descriptions

 active :
 backup :


 Images currently available on Flash

--------------------------------------------------------------------
 unit      active      backup     current-active        next-active
--------------------------------------------------------------------

    1     1.1.0.5     1.1.0.3            1.1.0.5            1.1.0.5

(cs2) # copy active backup
Copying active to backup
Copy operation successful
```

Step 2: Install the FASTPATH software and RCF

1. Verify the running version of the FASTPATH software.

Show example

```
(cs2) # show version

Switch: 1

System Description..............................  NetApp CN1610,
1.1.0.5, Linux
                                                   2.6.21.7
Machine Type....................................  NetApp CN1610
Machine Model...................................  CN1610
Serial Number...................................  20211200106
Burned In MAC Address...........................  00:A0:98:21:83:69
Software Version................................  1.1.0.5
Operating System................................  Linux 2.6.21.7
Network Processing Device.......................  BCM56820_B0
Part Number.....................................  111-00893

--More-- or (q)uit


Additional Packages.............................  FASTPATH QOS
                                                   FASTPATH IPv6
Management
```

2. Download the image file to the switch.

   Copying the image file to the active image means that when you reboot, that image establishes the running FASTPATH version. The previous image remains available as a backup.

Show example

```
(cs2) #copy
sftp://root@10.22.201.50//tftpboot/NetApp_CN1610_1.2.0.7.stk active
Remote Password:********

Mode..................................... SFTP
Set Server IP.................................. 10.22.201.50
Path..................................... /tftpboot/
Filename.....................................
NetApp_CN1610_1.2.0.7.stk
Data Type...................................... Code
Destination Filename........................... active

Management access will be blocked for the duration of the transfer
Are you sure you want to start? (y/n) y
SFTP Code transfer starting...


File transfer operation completed successfully.
```

3. Confirm the current and next-active boot image versions:

   `show bootvar`

Show example

```
(cs2) #show bootvar

Image Descriptions

 active :
 backup :


 Images currently available on Flash

--------------------------------------------------------------------
 unit      active      backup     current-active        next-active
--------------------------------------------------------------------

    1     1.1.0.8     1.1.0.8            1.1.0.8            1.2.0.7
```

4. Install the compatible RCF for the new image version to the switch.

   If the RCF version is already correct, bring up the ISL ports.

   Show example

```
(cs2) #copy tftp://10.22.201.50//CN1610_CS_RCF_v1.2.txt nvram:script
CN1610_CS_RCF_v1.2.scr

Mode..................................... TFTP
Set Server IP.............................. 10.22.201.50
Path..................................... /
Filename.....................................
CN1610_CS_RCF_v1.2.txt
Data Type................................... Config Script
Destination Filename........................
CN1610_CS_RCF_v1.2.scr

File with same name already exists.
WARNING:Continuing with this command will overwrite the existing
file.


Management access will be blocked for the duration of the transfer
Are you sure you want to start? (y/n) y


Validating configuration script...
[the script is now displayed line by line]

Configuration script validated.
File transfer operation completed successfully.
```

   > The `.scr` extension must be set as part of the file name before invoking the script. This extension is for the FASTPATH operating system.

   The switch validates the script automatically as it is downloaded to the switch. The output goes to the console.

5. Verify that the script was downloaded and saved to the file name you gave it.

Show example

```
(cs2) #script list

Configuration Script Name        Size(Bytes)
-------------------------------- -----------
CN1610_CS_RCF_v1.2.scr                  2191

1 configuration script(s) found.
2541 Kbytes free.
```

6. Apply the script to the switch.

Show example

```
(cs2) #script apply CN1610_CS_RCF_v1.2.scr

Are you sure you want to apply the configuration script? (y/n) y
[the script is now displayed line by line]...

Configuration script 'CN1610_CS_RCF_v1.2.scr' applied.
```

7. Verify that the changes have been applied to the switch, and then save them:

`show running-config`

Show example

```
(cs2) #show running-config
```

8. Save the running configuration so it becomes the startup configuration when you reboot the switch.

Show example

```
(cs2) #write memory
This operation may take a few minutes.
Management interfaces will not be available during this time.

Are you sure you want to save? (y/n) y

Config file 'startup-config' created successfully.

Configuration Saved!
```

9. Reboot the switch.

Show example

```
(cs2) #reload

The system has unsaved changes.
Would you like to save them now? (y/n) y

Config file 'startup-config' created successfully.
Configuration Saved!
System will now restart!
```

Step 3: Validate installation

1. Log in again, and then verify that the switch is running the new version of the FASTPATH software.

Show example

```
(cs2) #show version

Switch: 1

System Description..............................  NetApp CN1610,
1.2.0.7,Linux
                                                   3.8.13-4ce360e8
Machine Type....................................  NetApp CN1610
Machine Model...................................  CN1610
Serial Number...................................  20211200106
Burned In MAC Address...........................  00:A0:98:21:83:69
Software Version................................  1.2.0.7
Operating System................................  Linux 3.8.13-
4ce360e8
Network Processing Device.......................  BCM56820_B0
Part Number.....................................  111-00893
CPLD version....................................  0x5


Additional Packages.............................  FASTPATH QOS
                                                   FASTPATH IPv6
Management
```

After the reboot completes, you must log in to verify the image version, view the running configuration, and look for the description on interface 3/64, which is the version label for the RCF.

2. Bring up the ISL ports on cs1, the active switch.

Show example

```
(cs1) #configure
(cs1) (Config) #interface 0/13-0/16
(cs1) (Interface 0/13-0/16) #no shutdown
(cs1) (Interface 0/13-0/16) #exit
(cs1) (Config) #exit
```

3. Verify that the ISLs are operational:

`show port-channel 3/1`

The Link State field should indicate `Up`.

Show example

```
(cs1) #show port-channel 3/1

Local Interface................................ 3/1
Channel Name................................... ISL-LAG
Link State..................................... Up
Admin Mode..................................... Enabled
Type........................................... Static
Load Balance Option............................ 7
(Enhanced hashing mode)

Mbr    Device/       Port      Port
Ports  Timeout       Speed     Active
------ ------------- --------- -------
0/13   actor/long    10G Full  True
       partner/long
0/14   actor/long    10G Full  True
       partner/long
0/15   actor/long    10G Full  False
       partner/long
0/16   actor/long    10G Full  True
       partner/long
```

4. Bring up cluster port e0b on all nodes:

   `network port modify`

   You must enter the commands on the controller consoles that own the respective cluster LIFs.

   Show example

   The following example shows port e0b being brought up on node1 and node2:

   ```
   cluster1::*> network port modify -node node1 -port e0b -up-admin
   true
   cluster1::*> network port modify -node node2 -port e0b -up-admin
   true
   ```

5. Verify that the port e0b is up on all nodes:

   `network port show -ipspace cluster`

Show example

```
cluster1::*> network port show -ipspace cluster

                                                                  Speed
(Mbps)
Node   Port      IPspace      Broadcast Domain Link   MTU
Admin/Oper
------ --------- ------------ ---------------- ----- -------
------------
node1
       e0a       Cluster      Cluster          up       9000
auto/10000
       e0b       Cluster      Cluster          up       9000
auto/10000
node2
       e0a       Cluster      Cluster          up       9000
auto/10000
       e0b       Cluster      Cluster          up       9000
auto/10000
4 entries were displayed.
```

6. Verify that the LIF is now home (`true`) on both nodes:

   `network interface show -role cluster`

Show example

```
cluster1::*> network interface show -role cluster

            Logical    Status     Network            Current
Current Is
Vserver     Interface  Admin/Oper Address/Mask       Node
Port    Home
----------- ---------- ---------- ------------------ -------------
------- ----
Cluster
            node1_clus1  up/up    169.254.66.82/16   node1
e0a     true
            node1_clus2  up/up    169.254.206.128/16 node1
e0b     true
            node2_clus1  up/up    169.254.48.152/16  node2
e0a     true
            node2_clus2  up/up    169.254.42.74/16   node2
e0b     true
4 entries were displayed.
```

7. Show the status of the node members:

   `cluster show`

   Show example

```
cluster1::*> cluster show

Node                 Health  Eligibility   Epsilon
-------------------- ------- ------------  ------------
node1                true    true          false
node2                true    true          false
2 entries were displayed.
```

8. Return to the admin privilege level:

   `set -privilege admin`

9. Repeat the previous steps to install the FASTPATH software and RCF on the other switch, cs1.

Configure the hardware for the NetApp CN1610 switch

To configure the switch hardware and software for your cluster environment, refer to the

CN1601 and CN1610 Switch Setup and Configuration Guide.

Migrate switches

Migrate from a switchless cluster environment to a switched NetApp CN1610 cluster environment

If you have an existing two-node switchless cluster environment, you can migrate to a two-node switched cluster environment using CN1610 cluster network switches that enables you to scale beyond two nodes.

Review requirements

Before you begin

Make sure you have the following:

For a two-node switchless configuration, ensure that:

- The two-node switchless configuration is properly set up and functioning.
- The nodes are running ONTAP 8.2 or later.
- All cluster ports are in the `up` state.
- All cluster logical interfaces (LIFs) are in the `up` state and on their home ports.

For the CN1610 cluster switch configuration:

- The CN1610 cluster switch infrastructure are fully functional on both switches.
- Both switches have management network connectivity.
- There is console access to the cluster switches.
- CN1610 node-to-node switch and switch-to-switch connections use twinax or fiber cables.

  The Hardware Universe contains more information about cabling.

- Inter-Switch Link (ISL) cables are connected to ports 13 through 16 on both CN1610 switches.
- Initial customization of both the CN1610 switches are completed.

  Any previous site customization, such as SMTP, SNMP, and SSH should be copied to the new switches.

Related information

- Hardware Universe
- NetApp CN1601 and CN1610
- CN1601 and CN1610 Switch Setup and Configuration
- NetApp KB Article 1010449: How to suppress automatic case creation during scheduled maintenance windows

Migrate the switches

About the examples

The examples in this procedure use the following cluster switch and node nomenclature:

- The names of the CN1610 switches are cs1 and cs2.
- The names of the LIFs are clus1 and clus2.
- The names of the nodes are node1 and node2.
- The `cluster::*>` prompt indicates the name of the cluster.
- The cluster ports used in this procedure are e1a and e2a.

  The Hardware Universe contains the latest information about the actual cluster ports for your platforms.

Step 1: Prepare for migration

1. Change the privilege level to advanced, entering `y` when prompted to continue:

   ```
   set -privilege advanced
   ```

   The advanced prompt (*>) appears.

2. If AutoSupport is enabled on this cluster, suppress automatic case creation by invoking an AutoSupport message:

   ```
   system node autosupport invoke -node * -type all -message MAINT=xh
   ```

   x is the duration of the maintenance window in hours.

   > The AutoSupport message notifies technical support of this maintenance task so that automatic case creation is suppressed during the maintenance window.

   Show example

   The following command suppresses automatic case creation for two hours:

   ```
   cluster::*> system node autosupport invoke -node * -type all
   -message MAINT=2h
   ```

Step 2: Configure ports

1. Disable all of the node-facing ports (not ISL ports) on both the new cluster switches cs1 and cs2.

   You must not disable the ISL ports.

Show example

The following example shows that node-facing ports 1 through 12 are disabled on switch cs1:

```
(cs1)> enable
(cs1)# configure
(cs1)(Config)# interface 0/1-0/12
(cs1)(Interface 0/1-0/12)# shutdown
(cs1)(Interface 0/1-0/12)# exit
(cs1)(Config)# exit
```

The following example shows that node-facing ports 1 through 12 are disabled on switch cs2:

```
(c2)> enable
(cs2)# configure
(cs2)(Config)# interface 0/1-0/12
(cs2)(Interface 0/1-0/12)# shutdown
(cs2)(Interface 0/1-0/12)# exit
(cs2)(Config)# exit
```

2. Verify that the ISL and the physical ports on the ISL between the two CN1610 cluster switches cs1 and cs2 are `up`:

   `show port-channel`

Show example

The following example shows that the ISL ports are `up` on switch cs1:

```
(cs1)# show port-channel 3/1
Local Interface................................ 3/1
Channel Name................................... ISL-LAG
Link State..................................... Up
Admin Mode..................................... Enabled
Type........................................... Static
Load Balance Option............................ 7
(Enhanced hashing mode)

Mbr    Device/       Port      Port
Ports  Timeout       Speed     Active
------ ------------- --------- -------
0/13   actor/long    10G Full  True
       partner/long
0/14   actor/long    10G Full  True
       partner/long
0/15   actor/long    10G Full  True
       partner/long
0/16   actor/long    10G Full  True
       partner/long
```

The following example shows that the ISL ports are `up` on switch cs2:

```
(cs2)# show port-channel 3/1
Local Interface................................ 3/1
Channel Name................................... ISL-LAG
Link State..................................... Up
Admin Mode..................................... Enabled
Type........................................... Static
Load Balance Option............................ 7
(Enhanced hashing mode)

Mbr    Device/       Port      Port
Ports  Timeout       Speed     Active
------ ------------- --------- -------
0/13   actor/long    10G Full  True
       partner/long
0/14   actor/long    10G Full  True
       partner/long
0/15   actor/long    10G Full  True
       partner/long
0/16   actor/long    10G Full  True
       partner/long
```

3. Display the list of neighboring devices:

   `show isdp neighbors`

   This command provides information about the devices that are connected to the system.

Show example

The following example lists the neighboring devices on switch cs1:

```
(cs1)# show isdp neighbors
Capability Codes: R - Router, T - Trans Bridge, B - Source Route
Bridge,
                  S - Switch, H - Host, I - IGMP, r - Repeater
Device ID              Intf         Holdtime  Capability   Platform
Port ID
---------------------- ------------ --------- ------------ ---------
------------
cs2                    0/13         11        S            CN1610
0/13
cs2                    0/14         11        S            CN1610
0/14
cs2                    0/15         11        S            CN1610
0/15
cs2                    0/16         11        S            CN1610
0/16
```

The following example lists the neighboring devices on switch cs2:

```
(cs2)# show isdp neighbors
Capability Codes: R - Router, T - Trans Bridge, B - Source Route
Bridge,
                  S - Switch, H - Host, I - IGMP, r - Repeater
Device ID              Intf         Holdtime  Capability   Platform
Port ID
---------------------- ------------ --------- ------------ ---------
------------
cs1                    0/13         11        S            CN1610
0/13
cs1                    0/14         11        S            CN1610
0/14
cs1                    0/15         11        S            CN1610
0/15
cs1                    0/16         11        S            CN1610
0/16
```

4. Display the list of cluster ports:

```
network port show
```

Show example

The following example shows the available cluster ports:

```
cluster::*> network port show -ipspace Cluster
Node: node1

Ignore
                                                  Speed(Mbps) Health
Health
Port      IPspace      Broadcast Domain Link MTU  Admin/Oper  Status
Status
--------- ------------ ---------------- ---- ---- -----------
-------- ------
e0a       Cluster      Cluster          up   9000  auto/10000
healthy  false
e0b       Cluster      Cluster          up   9000  auto/10000
healthy  false
e0c       Cluster      Cluster          up   9000  auto/10000
healthy  false
e0d       Cluster      Cluster          up   9000  auto/10000
healthy  false
e4a       Cluster      Cluster          up   9000  auto/10000
healthy  false
e4b       Cluster      Cluster          up   9000  auto/10000
healthy  false

Node: node2

Ignore
                                                  Speed(Mbps) Health
Health
Port      IPspace      Broadcast Domain Link MTU  Admin/Oper  Status
Status
--------- ------------ ---------------- ---- ---- -----------
-------- ------
e0a       Cluster      Cluster          up   9000  auto/10000
healthy  false
e0b       Cluster      Cluster          up   9000  auto/10000
healthy  false
e0c       Cluster      Cluster          up   9000  auto/10000
healthy  false
e0d       Cluster      Cluster          up   9000  auto/10000
healthy  false
e4a       Cluster      Cluster          up   9000  auto/10000
healthy  false
e4b       Cluster      Cluster          up   9000  auto/10000
healthy  false
12 entries were displayed.
```

5. Verify that each cluster port is connected to the corresponding port on its partner cluster node:

   `run * cdpd show-neighbors`

   Show example

   The following example shows that cluster ports e1a and e2a are connected to the same port on their cluster partner node:

```
cluster::*> run * cdpd show-neighbors
2 entries were acted on.

Node: node1
Local  Remote          Remote                 Remote           Hold
Remote
Port   Device          Interface              Platform         Time
Capability
------ --------------- ---------------------- ---------------- -----
----------
e1a    node2           e1a                    FAS3270           137
H
e2a    node2           e2a                    FAS3270           137
H


Node: node2

Local  Remote          Remote                 Remote           Hold
Remote
Port   Device          Interface              Platform         Time
Capability
------ --------------- ---------------------- ---------------- -----
----------
e1a    node1           e1a                    FAS3270           161
H
e2a    node1           e2a                    FAS3270           161
H
```

6. Verify that all of the cluster LIFs are `up` and operational:

   `network interface show -vserver Cluster`

   Each cluster LIF should display `true` in the “Is Home” column.

Show example

```
cluster::*> network interface show -vserver Cluster
            Logical    Status     Network       Current
Current Is
Vserver     Interface  Admin/Oper Address/Mask  Node          Port
Home
----------- ---------- ---------- ------------- -------------
------- ----
node1
            clus1      up/up      10.10.10.1/16 node1         e1a
true
            clus2      up/up      10.10.10.2/16 node1         e2a
true
node2
            clus1      up/up      10.10.11.1/16 node2         e1a
true
            clus2      up/up      10.10.11.2/16 node2         e2a
true

4 entries were displayed.
```

The following modification and migration commands in steps 10 through 13 must be done from the local node.

7. Verify that all cluster ports are `up`:

   `network port show -ipspace Cluster`

Show example

```
cluster::*> network port show -ipspace Cluster

                                         Auto-Negot  Duplex     Speed
(Mbps)
Node   Port   Role         Link  MTU   Admin/Oper  Admin/Oper
Admin/Oper
------ ------ ------------ ----- ----- ----------- ----------
------------
node1
       e1a    clus1        up    9000  true/true  full/full
auto/10000
       e2a    clus2        up    9000  true/true  full/full
auto/10000
node2
       e1a    clus1        up    9000  true/true  full/full
auto/10000
       e2a    clus2        up    9000  true/true  full/full
auto/10000

4 entries were displayed.
```

8. Set the `-auto-revert` parameter to `false` on cluster LIFs clus1 and clus2 on both nodes:

   `network interface modify`

   Show example

```
cluster::*> network interface modify -vserver node1 -lif clus1 -auto
-revert false
cluster::*> network interface modify -vserver node1 -lif clus2 -auto
-revert false
cluster::*> network interface modify -vserver node2 -lif clus1 -auto
-revert false
cluster::*> network interface modify -vserver node2 -lif clus2 -auto
-revert false
```

   For release 8.3 and later, use the following command: `network interface modify -vserver Cluster -lif * -auto-revert false`

9. Verify the connectivity of the remote cluster interfaces:

ONTAP 9.9.1 and later

You can use the `network interface check cluster-connectivity` command to start an accessibility check for cluster connectivity and then display the details:

`network interface check cluster-connectivity start` and `network interface check cluster-connectivity show`

```
cluster1::*> network interface check cluster-connectivity start
```

NOTE: Wait for a number of seconds before running the `show` command to display the details.

```
cluster1::*> network interface check cluster-connectivity show
                                  Source           Destination
Packet
Node   Date                       LIF              LIF
Loss
------ -------------------------- ---------------- ----------------
-----------
node1
       3/5/2022 19:21:18 -06:00   node1_clus2      node2-clus1
none
       3/5/2022 19:21:20 -06:00   node1_clus2      node2_clus2
none
node2
       3/5/2022 19:21:18 -06:00   node2_clus2      node1_clus1
none
       3/5/2022 19:21:20 -06:00   node2_clus2      node1_clus2
none
```

All ONTAP releases

For all ONTAP releases, you can also use the `cluster ping-cluster -node <name>` command to check the connectivity:

```
cluster ping-cluster -node <name>
```

```
cluster1::*> cluster ping-cluster -node local
Host is node2
Getting addresses from network interface table...
Cluster node1_clus1 169.254.209.69 node1 e0a
Cluster node1_clus2 169.254.49.125 node1 e0b
Cluster node2_clus1 169.254.47.194 node2 e0a
Cluster node2_clus2 169.254.19.183 node2 e0b
Local = 169.254.47.194 169.254.19.183
Remote = 169.254.209.69 169.254.49.125
Cluster Vserver Id = 4294967293
Ping status:
....
Basic connectivity succeeds on 4 path(s)
Basic connectivity fails on 0 path(s)
................
Detected 9000 byte MTU on 4 path(s):
Local 169.254.47.194 to Remote 169.254.209.69
Local 169.254.47.194 to Remote 169.254.49.125
Local 169.254.19.183 to Remote 169.254.209.69
Local 169.254.19.183 to Remote 169.254.49.125
Larger than PMTU communication succeeds on 4 path(s)
RPC status:
2 paths up, 0 paths down (tcp check)
2 paths up, 0 paths down (udp check)
```

10. Migrate clus1 to port e2a on the console of each node:

`network interface migrate`

Show example

The following example shows the process for migrating clus1 to port e2a on node1 and node2:

```
cluster::*> network interface migrate -vserver node1 -lif clus1
-source-node node1 -dest-node node1 -dest-port e2a
cluster::*> network interface migrate -vserver node2 -lif clus1
-source-node node2 -dest-node node2 -dest-port e2a
```

For release 8.3 and later, use the following command: `network interface migrate -vserver Cluster -lif clus1 -destination-node node1 -destination -port e2a`

11. Verify that the migration took place:

```
network interface show -vserver Cluster
```

Show example

The following example verifies that clus1 is migrated to port e2a on node1 and node2:

```
cluster::*> network interface show -vserver Cluster
            Logical    Status     Network       Current
Current Is
Vserver     Interface  Admin/Oper Address/Mask  Node          Port
Home
----------- ---------- ---------- ------------- -------------
------- ----
node1
            clus1      up/up    10.10.10.1/16   node1         e2a
false
            clus2      up/up    10.10.10.2/16   node1         e2a
true
node2
            clus1      up/up    10.10.11.1/16   node2         e2a
false
            clus2      up/up    10.10.11.2/16   node2         e2a
true

4 entries were displayed.
```

12. Shut down cluster port e1a on both nodes:

```
network port modify
```

Show example

The following example shows how to shut down the port e1a on node1 and node2:

```
cluster::*> network port modify -node node1 -port e1a -up-admin
false
cluster::*> network port modify -node node2 -port e1a -up-admin
false
```

13. Verify the port status:

```
network port show
```

Show example

The following example shows that port e1a is `down` on node1 and node2:

```
cluster::*> network port show -role cluster
                                        Auto-Negot  Duplex     Speed
(Mbps)
Node   Port   Role         Link   MTU Admin/Oper  Admin/Oper
Admin/Oper
------ ------ ------------ ---- ----- ----------- ----------
------------
node1
       e1a    clus1        down  9000  true/true  full/full
auto/10000
       e2a    clus2        up    9000  true/true  full/full
auto/10000
node2
       e1a    clus1        down  9000  true/true  full/full
auto/10000
       e2a    clus2        up    9000  true/true  full/full
auto/10000

4 entries were displayed.
```

14. Disconnect the cable from cluster port e1a on node1, and then connect e1a to port 1 on cluster switch cs1, using the appropriate cabling supported by the CN1610 switches.

    The Hardware Universe contains more information about cabling.

15. Disconnect the cable from cluster port e1a on node2, and then connect e1a to port 2 on cluster switch cs1, using the appropriate cabling supported by the CN1610 switches.
16. Enable all of the node-facing ports on cluster switch cs1.

    Show example

    The following example shows that ports 1 through 12 are enabled on switch cs1:

    ```
    (cs1)# configure
    (cs1)(Config)# interface 0/1-0/12
    (cs1)(Interface 0/1-0/12)# no shutdown
    (cs1)(Interface 0/1-0/12)# exit
    (cs1)(Config)# exit
    ```

17. Enable the first cluster port e1a on each node:

`network port modify`

Show example

The following example shows how to enable the port e1a on node1 and node2:

```
cluster::*> network port modify -node node1 -port e1a -up-admin true
cluster::*> network port modify -node node2 -port e1a -up-admin true
```

18. Verify that all of the cluster ports are `up`:

`network port show -ipspace Cluster`

Show example

The following example shows that all of the cluster ports are `up` on node1 and node2:

```
cluster::*> network port show -ipspace Cluster
                                     Auto-Negot  Duplex     Speed
(Mbps)
Node   Port   Role         Link   MTU Admin/Oper  Admin/Oper
Admin/Oper
------ ------ ------------ ---- ----- ----------- ----------
------------
node1
       e1a    clus1        up    9000  true/true  full/full
auto/10000
       e2a    clus2        up    9000  true/true  full/full
auto/10000
node2
       e1a    clus1        up    9000  true/true  full/full
auto/10000
       e2a    clus2        up    9000  true/true  full/full
auto/10000

4 entries were displayed.
```

19. Revert clus1 (which was previously migrated) to e1a on both nodes:

`network interface revert`

Show example

The following example shows how to revert clus1 to the port e1a on node1 and node2:

```
cluster::*> network interface revert -vserver node1 -lif clus1
cluster::*> network interface revert -vserver node2 -lif clus1
```

For release 8.3 and later, use the following command: `network interface revert -vserver Cluster -lif <nodename_clus<N>>`

20. Verify that all of the cluster LIFs are `up`, operational, and display as `true` in the "Is Home" column:

`network interface show -vserver Cluster`

Show example

The following example shows that all of the LIFs are `up` on node1 and node2 and that the "Is Home" column results are `true`:

```
cluster::*> network interface show -vserver Cluster
            Logical    Status     Network       Current
Current Is
Vserver     Interface  Admin/Oper Address/Mask  Node          Port
Home
----------- ---------- ---------- ------------- -------------
------- ----
node1
            clus1      up/up    10.10.10.1/16   node1         e1a
true
            clus2      up/up    10.10.10.2/16   node1         e2a
true
node2
            clus1      up/up    10.10.11.1/16   node2         e1a
true
            clus2      up/up    10.10.11.2/16   node2         e2a
true

4 entries were displayed.
```

21. Display information about the status of the nodes in the cluster:

`cluster show`

Show example

The following example displays information about the health and eligibility of the nodes in the cluster:

```
cluster::*> cluster show
Node                  Health  Eligibility   Epsilon
--------------------- ------- ------------  ------------
node1                 true    true          false
node2                 true    true          false
```

22. Migrate clus2 to port e1a on the console of each node:

    `network interface migrate`

Show example

The following example shows the process for migrating clus2 to port e1a on node1 and node2:

```
cluster::*> network interface migrate -vserver node1 -lif clus2
-source-node node1 -dest-node node1 -dest-port e1a
cluster::*> network interface migrate -vserver node2 -lif clus2
-source-node node2 -dest-node node2 -dest-port e1a
```

For release 8.3 and later, use the following command: `network interface migrate -vserver Cluster -lif node1_clus2 -dest-node node1 -dest-port e1a`

23. Verify that the migration took place:

    `network interface show -vserver Cluster`

Show example

The following example verifies that clus2 is migrated to port e1a on node1 and node2:

```
cluster::*> network interface show -vserver Cluster
            Logical    Status     Network       Current
Current Is
Vserver     Interface  Admin/Oper Address/Mask  Node          Port
Home
----------- ---------- ---------- ------------- -------------
------- ----
node1
            clus1      up/up    10.10.10.1/16   node1         e1a
true
            clus2      up/up    10.10.10.2/16   node1         e1a
false
node2
            clus1      up/up    10.10.11.1/16   node2         e1a
true
            clus2      up/up    10.10.11.2/16   node2         e1a
false

4 entries were displayed.
```

24. Shut down cluster port e2a on both nodes:

    `network port modify`

    Show example

    The following example shows how to shut down the port e2a on node1 and node2:

    ```
    cluster::*> network port modify -node node1 -port e2a -up-admin
    false
    cluster::*> network port modify -node node2 -port e2a -up-admin
    false
    ```

25. Verify the port status:

    `network port show`

Show example

The following example shows that port e2a is `down` on node1 and node2:

```
cluster::*> network port show -role cluster
                                       Auto-Negot  Duplex     Speed
(Mbps)
Node   Port   Role         Link   MTU Admin/Oper  Admin/Oper
Admin/Oper
------ ------ ------------ ---- ----- ----------- ----------
------------
node1
       e1a    clus1        up    9000  true/true  full/full
auto/10000
       e2a    clus2        down  9000  true/true  full/full
auto/10000
node2
       e1a    clus1        up    9000  true/true  full/full
auto/10000
       e2a    clus2        down  9000  true/true  full/full
auto/10000

4 entries were displayed.
```

26. Disconnect the cable from cluster port e2a on node1, and then connect e2a to port 1 on cluster switch cs2, using the appropriate cabling supported by the CN1610 switches.
27. Disconnect the cable from cluster port e2a on node2, and then connect e2a to port 2 on cluster switch cs2, using the appropriate cabling supported by the CN1610 switches.
28. Enable all of the node-facing ports on cluster switch cs2.

Show example

The following example shows that ports 1 through 12 are enabled on switch cs2:

```
(cs2)# configure
(cs2)(Config)# interface 0/1-0/12
(cs2)(Interface 0/1-0/12)# no shutdown
(cs2)(Interface 0/1-0/12)# exit
(cs2)(Config)# exit
```

29. Enable the second cluster port e2a on each node.

Show example

The following example shows how to enable the port e2a on node1 and node2:

```
cluster::*> network port modify -node node1 -port e2a -up-admin true
cluster::*> network port modify -node node2 -port e2a -up-admin true
```

30. Verify that all of the cluster ports are `up`:

`network port show -ipspace Cluster`

Show example

The following example shows that all of the cluster ports are `up` on node1 and node2:

```
cluster::*> network port show -ipspace Cluster
                                     Auto-Negot  Duplex     Speed
(Mbps)
Node   Port   Role         Link   MTU Admin/Oper  Admin/Oper
Admin/Oper
------ ------ ------------ ---- ----- ----------- ----------
------------
node1
       e1a    clus1        up    9000  true/true  full/full
auto/10000
       e2a    clus2        up    9000  true/true  full/full
auto/10000
node2
       e1a    clus1        up    9000  true/true  full/full
auto/10000
       e2a    clus2        up    9000  true/true  full/full
auto/10000

4 entries were displayed.
```

31. Revert clus2 (which was previously migrated) to e2a on both nodes:

`network interface revert`

Show example

The following example shows how to revert clus2 to the port e2a on node1 and node2:

```
cluster::*> network interface revert -vserver node1 -lif clus2
cluster::*> network interface revert -vserver node2 -lif clus2
```

For release 8.3 and later, the commands are:
`cluster::*> network interface revert -vserver Cluster -lif node1_clus2` and
`cluster::*> network interface revert -vserver Cluster -lif node2_clus2`

Step 3: Complete the configuration

1. Verify that all of the interfaces display `true` in the "Is Home" column:

   `network interface show -vserver Cluster`

Show example

The following example shows that all of the LIFs are `up` on node1 and node2 and that the "Is Home" column results are `true`:

```
cluster::*> network interface show -vserver Cluster

             Logical    Status     Network            Current
Current Is
Vserver      Interface  Admin/Oper Address/Mask       Node
Port    Home
-----------  ---------- ---------- ------------------ -----------
------- ----
node1
             clus1      up/up      10.10.10.1/16      node1
e1a     true
             clus2      up/up      10.10.10.2/16      node1
e2a     true
node2
             clus1      up/up      10.10.11.1/16      node2
e1a     true
             clus2      up/up      10.10.11.2/16      node2
e2a     true
```

2. Verify the connectivity of the remote cluster interfaces:

ONTAP 9.9.1 and later

You can use the `network interface check cluster-connectivity` command to start an accessibility check for cluster connectivity and then display the details:

`network interface check cluster-connectivity start` and `network interface check cluster-connectivity show`

```
cluster1::*> network interface check cluster-connectivity start
```

NOTE: Wait for a number of seconds before running the `show` command to display the details.

```
cluster1::*> network interface check cluster-connectivity show
                                  Source           Destination
Packet
Node   Date                       LIF              LIF
Loss
------ ------------------------- ---------------- ----------------
-----------
node1
       3/5/2022 19:21:18 -06:00   node1_clus2      node2-clus1
none
       3/5/2022 19:21:20 -06:00   node1_clus2      node2_clus2
none
node2
       3/5/2022 19:21:18 -06:00   node2_clus2      node1_clus1
none
       3/5/2022 19:21:20 -06:00   node2_clus2      node1_clus2
none
```

All ONTAP releases

For all ONTAP releases, you can also use the `cluster ping-cluster -node <name>` command to check the connectivity:

```
cluster ping-cluster -node <name>
```

```
cluster1::*> cluster ping-cluster -node local
Host is node2
Getting addresses from network interface table...
Cluster node1_clus1 169.254.209.69 node1 e0a
Cluster node1_clus2 169.254.49.125 node1 e0b
Cluster node2_clus1 169.254.47.194 node2 e0a
Cluster node2_clus2 169.254.19.183 node2 e0b
Local = 169.254.47.194 169.254.19.183
Remote = 169.254.209.69 169.254.49.125
Cluster Vserver Id = 4294967293
Ping status:
....
Basic connectivity succeeds on 4 path(s)
Basic connectivity fails on 0 path(s)
................
Detected 9000 byte MTU on 4 path(s):
Local 169.254.47.194 to Remote 169.254.209.69
Local 169.254.47.194 to Remote 169.254.49.125
Local 169.254.19.183 to Remote 169.254.209.69
Local 169.254.19.183 to Remote 169.254.49.125
Larger than PMTU communication succeeds on 4 path(s)
RPC status:
2 paths up, 0 paths down (tcp check)
2 paths up, 0 paths down (udp check)
```

3. Verify that both nodes have two connections to each switch:

```
show isdp neighbors
```

Show example

The following example shows the appropriate results for both switches:

```
(cs1)# show isdp neighbors
Capability Codes: R - Router, T - Trans Bridge, B - Source Route
Bridge,
                  S - Switch, H - Host, I - IGMP, r - Repeater
Device ID              Intf         Holdtime  Capability   Platform
Port ID
---------------------- ------------ --------- ------------ ---------
------------
node1                  0/1          132       H            FAS3270
e1a
node2                  0/2          163       H            FAS3270
e1a
cs2                    0/13         11        S            CN1610
0/13
cs2                    0/14         11        S            CN1610
0/14
cs2                    0/15         11        S            CN1610
0/15
cs2                    0/16         11        S            CN1610
0/16

(cs2)# show isdp neighbors
Capability Codes: R - Router, T - Trans Bridge, B - Source Route
Bridge,
                  S - Switch, H - Host, I - IGMP, r - Repeater
Device ID              Intf         Holdtime  Capability   Platform
Port ID
---------------------- ------------ --------- ------------ ---------
------------
node1                  0/1          132       H            FAS3270
e2a
node2                  0/2          163       H            FAS3270
e2a
cs1                    0/13         11        S            CN1610
0/13
cs1                    0/14         11        S            CN1610
0/14
cs1                    0/15         11        S            CN1610
0/15
cs1                    0/16         11        S            CN1610
0/16
```

4. Display information about the devices in your configuration:

   ```
   network device discovery show
   ```

5. Disable the two-node switchless configuration settings on both nodes using the advanced privilege command:

   ```
   network options detect-switchless modify
   ```

   Show example

   The following example shows how to disable the switchless configuration settings:

   ```
   cluster::*> network options detect-switchless modify -enabled false
   ```

   For release 9.2 and later, skip this step since the configuration is automatically converted.

6. Verify that the settings are disabled:

   ```
   network options detect-switchless-cluster show
   ```

   Show example

   The `false` output in the following example shows that the configuration settings are disabled:

   ```
   cluster::*> network options detect-switchless-cluster show
   Enable Switchless Cluster Detection: false
   ```

   For release 9.2 and later, wait until `Enable Switchless Cluster` is set to false. This can take up to three minutes.

7. Configure clusters clus1 and clus2 to auto revert on each node and confirm.

   Show example

   ```
   cluster::*> network interface modify -vserver node1 -lif clus1 -auto
   -revert true
   cluster::*> network interface modify -vserver node1 -lif clus2 -auto
   -revert true
   cluster::*> network interface modify -vserver node2 -lif clus1 -auto
   -revert true
   cluster::*> network interface modify -vserver node2 -lif clus2 -auto
   -revert true
   ```

For release 8.3 and later, use the following command: `network interface modify -vserver Cluster -lif * -auto-revert true` to enable auto-revert on all nodes in the cluster.

8. Verify the status of the node members in the cluster:

   `cluster show`

   Show example

   The following example shows information about the health and eligibility of the nodes in the cluster:

   ```
   cluster::*> cluster show
   Node                 Health  Eligibility   Epsilon
   -------------------- ------- ------------  ------------
   node1                true    true          false
   node2                true    true          false
   ```

9. If you suppressed automatic case creation, reenable it by invoking an AutoSupport message:

   `system node autosupport invoke -node * -type all -message MAINT=END`

   Show example

   ```
   cluster::*> system node autosupport invoke -node * -type all
   -message MAINT=END
   ```

10. Change the privilege level back to admin:

    `set -privilege admin`

Replace switches

Replace a NetApp CN1610 cluster switch

Follow these steps to replace a defective NetApp CN1610 switch in a cluster network. This is a non-disruptive procedure (NDU).

Review requirements

Before you begin

Before you perform the switch replacement, the following conditions must exist before you perform the switch replacement in the current environment and on the replacement switch for existing cluster and network infrastructure:

- The existing cluster must be verified as completely functional, with at least one fully connected cluster switch.
- All of the cluster ports must be **up**.
- All of the cluster logical interfaces (LIFs) must be up and must not have been migrated.
- The ONTAP cluster `ping-cluster -node node1` command must indicate that basic connectivity and larger than PMTU communication are successful on all of the paths.

Enable console logging

NetApp strongly recommends that you enable console logging on the devices that you are using and take the following actions when replacing your switch:

- Leave AutoSupport enabled during maintenance.
- Trigger a maintenance AutoSupport before and after maintenance to disable case creation for the duration of the maintenance. See this Knowledge Base article SU92: How to suppress automatic case creation during scheduled maintenance windows for further details.
- Enable session logging for any CLI sessions. For instructions on how to enable session logging, review the "Logging Session Output" section in this Knowledge Base article How to configure PuTTY for optimal connectivity to ONTAP systems.

Replace the switch

About this task

You must execute the command for migrating a cluster LIF from the node where the cluster LIF is hosted.

The examples in this procedure use the following cluster switch and node nomenclature:

- The names of the two CN1610 cluster switches are `cs1` and `cs2`.
- The name of the CN1610 switch that is to be replaced (the defective switch) is `old_cs1`.
- The name of the new CN1610 switch (the replacement switch) is `new_cs1`.
- The name of the partner switch that is not being replaced is `cs2`.

Steps

1. Confirm that the startup configuration file matches the running configuration file. You must save these files locally for use during the replacement.

   The configuration commands in the following example are for FASTPATH 1.2.0.7:

   Show example

   ```
   (old_cs1)> enable
   (old_cs1)# show running-config
   (old_cs1)# show startup-config
   ```

2. Create a copy of the running configuration file.

   The command in the following example is for FASTPATH 1.2.0.7:

Show example

```
(old_cs1)# show running-config filename.scr
Config script created successfully.
```

You can use any file name except `CN1610_CS_RCF_v1.2.scr`. The file name must have the **.scr** extension.

3. Save the running configuration file of the switch to an external host in preparation for the replacement.

Show example

```
(old_cs1)# copy nvram:script filename.scr
scp://<Username>@<remote_IP_address>/path_to_file/filename.scr
```

4. Verify that the switch and ONTAP versions match in the compatibility matrix. See the NetApp CN1601 and CN1610 Switches page for details.
5. From the Software Downloads page on the NetApp Support Site, select NetApp Cluster Switches to download the appropriate RCF and FASTPATH versions.
6. Set up a Trivial File Transfer Protocol (TFTP) server with the FASTPATH, RCF, and saved configuration `.scr` file for use with the new switch.
7. Connect the serial port (the RJ-45 connector labeled “IOIOI” on the right side of the switch) to an available host with terminal emulation.
8. On the host, set the serial terminal connection settings:
   a. 9600 baud
   b. 8 data bits
   c. 1 stop bit
   d. parity: none
   e. flow control: none
9. Connect the management port (the RJ-45 wrench port on the left side of the switch) to the same network where your TFTP server is located.
10. Prepare to connect to the network with the TFTP server.

    If you are using Dynamic Host Configuration Protocol (DHCP), you do not have to configure an IP address for the switch at this time. The service port is set to use DHCP by default. The network management port is set to none for the IPv4 and IPv6 protocol settings. If your wrench port is connected to a network that has a DHCP server, then the server settings are configured automatically.

    To set a static IP address, you should use the serviceport protocol, network protocol, and serviceport ip commands.

Show example

```
(new_cs1)# serviceport ip <ipaddr> <netmask> <gateway>
```

11. Optionally, if the TFTP server is on a laptop, then connect the CN1610 switch to the laptop by using a standard Ethernet cable, and then configure its network port in the same network with an alternate IP address.

    You can use the `ping` command to verify the address. If you are unable to establish the connectivity, you should use a nonrouted network, and configure the service port using IP 192.168.x or 172.16.x. You can reconfigure the service port to the production management IP address at a later date.

12. Optionally, verify and install the appropriate versions of the RCF and FASTPATH software for the new switch. If you have verified that the new switch is correctly set up and does not require updates to the RCF and FASTPATH software, you should go to step 13.

    a. Verify the new switch settings.

    Show example

    ```
    (new_cs1)> enable
    (new_cs1)# show version
    ```

    b. Download the RCF to the new switch.

Show example

```
(new_cs1)# copy tftp://<server_ip_address>/CN1610_CS_RCF_v1.2.txt
nvram:script CN1610_CS_RCF_v1.2.scr
Mode.   TFTP
Set Server IP.  172.22.201.50
Path.   /
Filename.....................................
CN1610_CS_RCF_v1.2.txt
Data Type..................................... Config Script
Destination Filename.........................
CN1610_CS_RCF_v1.2.scr
File with same name already exists.
WARNING:Continuing with this command will overwrite the existing
file.

Management access will be blocked for the duration of the
transfer Are you sure you want to start? (y/n) y

File transfer in progress. Management access will be blocked for
the duration of the transfer. please wait...
Validating configuration script...
(the entire script is displayed line by line)
...
description "NetApp CN1610 Cluster Switch RCF v1.2 - 2015-01-13"
...
Configuration script validated.
File transfer operation completed successfully.
```

c. Verify that the RCF is downloaded to the switch.

Show example

```
(new_cs1)# script list
Configuration Script Nam   Size(Bytes)
-------------------------- -----------
CN1610_CS_RCF_v1.1.scr            2191
CN1610_CS_RCF_v1.2.scr            2240
latest_config.scr                 2356

4 configuration script(s) found.
2039 Kbytes free.
```

13. Apply the RCF to the CN1610 switch.

Show example

```
(new_cs1)# script apply CN1610_CS_RCF_v1.2.scr
Are you sure you want to apply the configuration script? (y/n) y
...
(the entire script is displayed line by line)
...
description "NetApp CN1610 Cluster Switch RCF v1.2 - 2015-01-13"
...
Configuration script 'CN1610_CS_RCF_v1.2.scr' applied. Note that the
script output will go to the console.
After the script is applied, those settings will be active in the
running-config file. To save them to the startup-config file, you
must use the write memory command, or if you used the reload answer
yes when asked if you want to save the changes.
```

a. Save the running configuration file so that it becomes the startup configuration file when you reboot the switch.

Show example

```
(new_cs1)# write memory
This operation may take a few minutes.
Management interfaces will not be available during this time.

Are you sure you want to save? (y/n) y

Config file 'startup-config' created successfully.

Configuration Saved!
```

b. Download the image to the CN1610 switch.

Show example

```
(new_cs1)# copy
tftp://<server_ip_address>/NetApp_CN1610_1.2.0.7.stk active
Mode.   TFTP
Set Server IP.  tftp_server_ip_address
Path.   /
Filename.....................................
NetApp_CN1610_1.2.0.7.stk
Data Type.  Code
Destination Filename.   active

Management access will be blocked for the duration of the
transfer

Are you sure you want to start? (y/n) y

TFTP Code transfer starting...

File transfer operation completed successfully.
```

c. Run the new active boot image by rebooting the switch.

The switch must be rebooted for the command in step 6 to reflect the new image. There are two possible views for a response that you might see after you enter the reload command.

Show example

```
(new_cs1)# reload
The system has unsaved changes.
Would you like to save them now? (y/n) y

Config file 'startup-config' created successfully.

Configuration Saved! System will now restart!
.
.
.
Cluster Interconnect Infrastructure

User:admin Password: (new_cs1) >*enable*
```

d. Copy the saved configuration file from the old switch to the new switch.

Show example

```
(new_cs1)# copy tftp://<server_ip_address>/<filename>.scr
nvram:script <filename>.scr
```

e. Apply the previously saved configuration to the new switch.

Show example

```
(new_cs1)# script apply <filename>.scr
Are you sure you want to apply the configuration script? (y/n) y

The system has unsaved changes.
Would you like to save them now? (y/n) y

Config file 'startup-config' created successfully.

Configuration Saved!
```

f. Save the running configuration file to the startup configuration file.

Show example

```
(new_cs1)# write memory
```

14. If AutoSupport is enabled on this cluster, suppress automatic case creation by invoking an AutoSupport message:
`system node autosupport invoke -node * -type all - message MAINT=xh`

    x is the duration of the maintenance window in hours.

    The AutoSupport message notifies technical support of this maintenance task so that automatic case creation is suppressed during the maintenance window.

15. On the new switch new_cs1, log in as the admin user, and shut down all of the ports that are connected to the node cluster interfaces (ports 1 through 12).

Show example

```
User:*admin*
Password:
(new_cs1)> enable
(new_cs1)#
(new_cs1)# config
(new_cs1)(config)# interface 0/1-0/12
(new_cs1)(interface 0/1-0/12)# shutdown
(new_cs1)(interface 0/1-0/12)# exit
(new_cs1)# write memory
```

16. Migrate the cluster LIFs from the ports that are connected to the old_cs1 switch.

    You must migrate each cluster LIF from its current node's management interface.

    Show example

    ```
    cluster::> set -privilege advanced
    cluster::> network interface migrate -vserver <vserver_name> -lif
    <Cluster_LIF_to_be_moved> - sourcenode <current_node> -dest-node
    <current_node> -dest-port <cluster_port_that_is_UP>
    ```

17. Verify that all of the cluster LIFs have been moved to the appropriate cluster port on each node.

    Show example

    ```
    cluster::> network interface show -role cluster
    ```

18. Shut down the cluster ports that are attached to the switch that you replaced.

    Show example

    ```
    cluster::*> network port modify -node <node_name> -port
    <port_to_admin_down> -up-admin false
    ```

19. Verify the health of the cluster.

Show example

```
cluster::*> cluster show
```

20. Verify that the ports are down.

Show example

```
cluster::*> cluster ping-cluster -node <node_name>
```

21. On the switch cs2, shut down the ISL ports 13 through 16.

Show example

```
(cs2)# config
(cs2)(config)# interface 0/13-0/16
(cs2)(interface 0/13-0/16)# shutdown
(cs2)# show port-channel 3/1
```

22. Verify whether the storage administrator is ready for the replacement of the switch.
23. Remove all of the cables from the old_cs1 switch, and then connect the cables to the same ports on the new_cs1 switch.
24. On the cs2 switch, bring up the ISL ports 13 through 16.

Show example

```
(cs2)# config
(cs2)(config)# interface 0/13-0/16
(cs2)(interface 0/13-0/16)# no shutdown
```

25. Bring up the ports on the new switch that are associated with the cluster nodes.

Show example

```
(new_cs1)# config
(new_cs1)(config)# interface 0/1-0/12
(new_cs1)(interface 0/13-0/16)# no shutdown
```

26. On a single node, bring up the cluster node port that is connected to the replaced switch, and then confirm that the link is up.

Show example

```
cluster::*> network port modify -node node1 -port
<port_to_be_onlined> -up-admin true
cluster::*> network port show -role cluster
```

27. Revert the cluster LIFs that are associated with the port in step 25 on the same node.

    In this example, the LIFs on node1 are successfully reverted if the “Is Home” column is true.

Show example

```
cluster::*> network interface revert -vserver node1 -lif
<cluster_lif_to_be_reverted>
cluster::*> network interface show -role cluster
```

28. If the first node’s cluster LIF is up and is reverted to its home port, repeat steps 25 and 26 to bring up the cluster ports and to revert the cluster LIFs on the other nodes in the cluster.
29. Display information about the nodes in the cluster.

Show example

```
cluster::*> cluster show
```

30. Confirm that the startup configuration file and running configuration file are correct on the replaced switch. This configuration file should match the output in step 1.

Show example

```
(new_cs1)> enable
(new_cs1)# show running-config
(new_cs1)# show startup-config
```

31. If you suppressed automatic case creation, re-enable it by invoking an AutoSupport message:

```
system node autosupport invoke -node * -type all -message MAINT=END
```

Replace NetApp CN1610 cluster switches with switchless connections

You can migrate from a cluster with a switched cluster network to one where two nodes are directly connected for ONTAP 9.3 and later.

Review requirements

Guidelines

Review the following guidelines:

- Migrating to a two-node switchless cluster configuration is a nondisruptive operation. Most systems have two dedicated cluster interconnect ports on each node, but you can also use this procedure for systems with a larger number of dedicated cluster interconnect ports on each node, such as four, six or eight.
- You cannot use the switchless cluster interconnect feature with more than two nodes.
- If you have an existing two-node cluster that uses cluster interconnect switches and is running ONTAP 9.3 or later, you can replace the switches with direct, back-to-back connections between the nodes.

Before you begin

Make sure you have the following:

- A healthy cluster that consists of two nodes connected by cluster switches. The nodes must be running the same ONTAP release.
- Each node with the required number of dedicated cluster ports, which provide redundant cluster interconnect connections to support your system configuration. For example, there are two redundant ports for a system with two dedicated cluster interconnect ports on each node.

Migrate the switches

About this task

The following procedure removes the cluster switches in a two-node cluster and replaces each connection to the switch with a direct connection to the partner node.

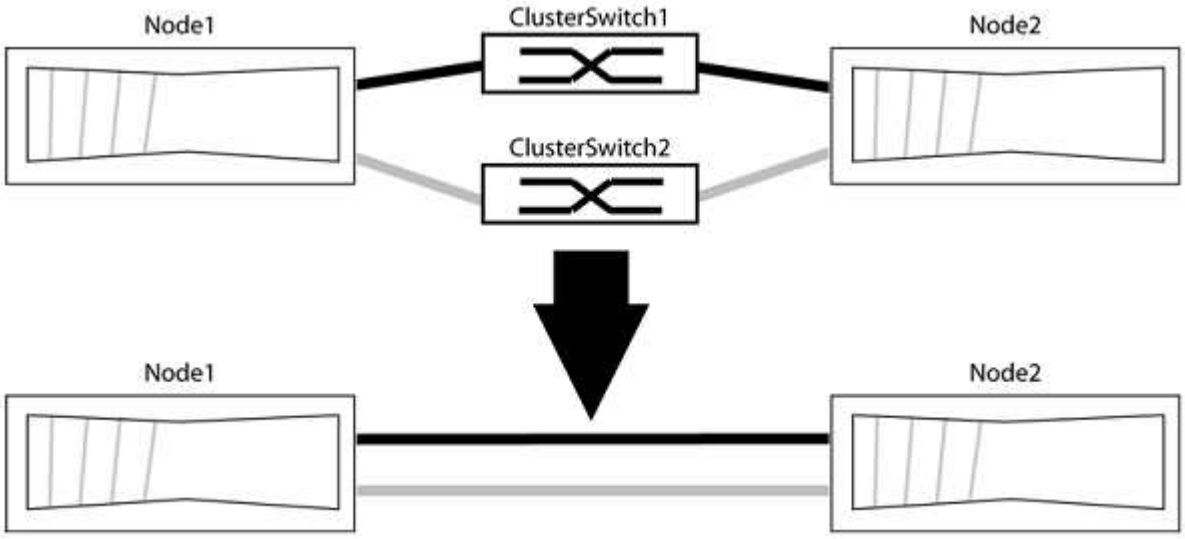

About the examples

The examples in the following procedure show nodes that are using "e0a" and "e0b" as cluster ports. Your nodes might be using different cluster ports as they vary by system.

Step 1: Prepare for migration

1. Change the privilege level to advanced, entering `y` when prompted to continue:

   ```
   set -privilege advanced
   ```

   The advanced prompt `*>` appears.

2. ONTAP 9.3 and later supports automatic detection of switchless clusters, which is enabled by default.

   You can verify that detection of switchless clusters is enabled by running the advanced privilege command:

   ```
   network options detect-switchless-cluster show
   ```

   Show example

   The following example output shows if the option is enabled.

   ```
   cluster::*> network options detect-switchless-cluster show
      (network options detect-switchless-cluster show)
   Enable Switchless Cluster Detection: true
   ```

   If "Enable Switchless Cluster Detection" is `false`, contact NetApp support.

3. If AutoSupport is enabled on this cluster, suppress automatic case creation by invoking an AutoSupport message:

   ```
   system node autosupport invoke -node * -type all -message
   MAINT=<number_of_hours>h
   ```

   where `h` is the duration of the maintenance window in hours. The message notifies technical support of this maintenance task so that they can suppress automatic case creation during the maintenance window.

   In the following example, the command suppresses automatic case creation for two hours:

   Show example

   ```
   cluster::*> system node autosupport invoke -node * -type all
   -message MAINT=2h
   ```

Step 2: Configure ports and cabling

1. Organize the cluster ports on each switch into groups so that the cluster ports in group1 go to cluster switch1 and the cluster ports in group2 go to cluster switch2. These groups are required later in the procedure.
2. Identify the cluster ports and verify link status and health:

```
network port show -ipspace Cluster
```

In the following example for nodes with cluster ports "e0a" and "e0b", one group is identified as “node1:e0a” and “node2:e0a” and the other group as “node1:e0b” and “node2:e0b”. Your nodes might be using different cluster ports because they vary by system.

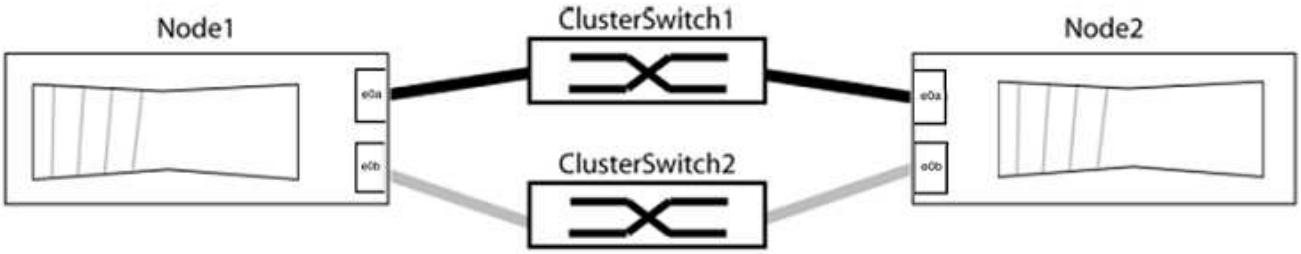

Verify that the ports have a value of `up` for the “Link” column and a value of `healthy` for the “Health Status” column.

Show example

```
cluster::> network port show -ipspace Cluster
Node: node1

Ignore
                                             Speed(Mbps) Health
Health
Port  IPspace   Broadcast Domain Link  MTU   Admin/Oper  Status
Status
----- --------- ---------------- ----- ----- ----------- -------
-------
e0a   Cluster   Cluster          up    9000  auto/10000  healthy
false
e0b   Cluster   Cluster          up    9000  auto/10000  healthy
false

Node: node2

Ignore
                                             Speed(Mbps) Health
Health
Port  IPspace   Broadcast Domain Link  MTU   Admin/Oper  Status
Status
----- --------- ---------------- ----- ----- ----------- -------
-------
e0a   Cluster   Cluster          up    9000  auto/10000  healthy
false
e0b   Cluster   Cluster          up    9000  auto/10000  healthy
false
4 entries were displayed.
```

3. Confirm that all the cluster LIFs are on their home ports.

   Verify that the “is-home” column is `true` for each of the cluster LIFs:

   `network interface show -vserver Cluster -fields is-home`

Show example

```
cluster::*> net int show -vserver Cluster -fields is-home
(network interface show)
vserver  lif          is-home
-------- ------------ --------
Cluster  node1_clus1  true
Cluster  node1_clus2  true
Cluster  node2_clus1  true
Cluster  node2_clus2  true
4 entries were displayed.
```

If there are cluster LIFs that are not on their home ports, revert those LIFs to their home ports:

```
network interface revert -vserver Cluster -lif *
```

4. Disable auto-revert for the cluster LIFs:

```
network interface modify -vserver Cluster -lif * -auto-revert false
```

5. Verify that all ports listed in the previous step are connected to a network switch:

```
network device-discovery show -port cluster_port
```

The “Discovered Device” column should be the name of the cluster switch that the port is connected to.

Show example

The following example shows that cluster ports "e0a" and "e0b" are correctly connected to cluster switches "cs1" and "cs2".

```
cluster::> network device-discovery show -port e0a|e0b
  (network device-discovery show)
Node/     Local  Discovered
Protocol  Port   Device (LLDP: ChassisID)  Interface  Platform
--------- ------ ------------------------- ---------- ----------
node1/cdp
          e0a    cs1                       0/11       BES-53248
          e0b    cs2                       0/12       BES-53248
node2/cdp
          e0a    cs1                       0/9        BES-53248
          e0b    cs2                       0/9        BES-53248
4 entries were displayed.
```

6. Verify the connectivity of the remote cluster interfaces:

ONTAP 9.9.1 and later

You can use the `network interface check cluster-connectivity` command to start an accessibility check for cluster connectivity and then display the details:

`network interface check cluster-connectivity start` and `network interface check cluster-connectivity show`

```
cluster1::*> network interface check cluster-connectivity start
```

NOTE: Wait for a number of seconds before running the `show` command to display the details.

```
cluster1::*> network interface check cluster-connectivity show
                                  Source           Destination
Packet
Node   Date                       LIF              LIF
Loss
------ -------------------------- ---------------- ----------------
-----------
node1
       3/5/2022 19:21:18 -06:00   node1_clus2      node2-clus1
none
       3/5/2022 19:21:20 -06:00   node1_clus2      node2_clus2
none
node2
       3/5/2022 19:21:18 -06:00   node2_clus2      node1_clus1
none
       3/5/2022 19:21:20 -06:00   node2_clus2      node1_clus2
none
```

All ONTAP releases

For all ONTAP releases, you can also use the `cluster ping-cluster -node <name>` command to check the connectivity:

```
cluster ping-cluster -node <name>
```

```
cluster1::*> cluster ping-cluster -node local
Host is node2
Getting addresses from network interface table...
Cluster node1_clus1 169.254.209.69 node1 e0a
Cluster node1_clus2 169.254.49.125 node1 e0b
Cluster node2_clus1 169.254.47.194 node2 e0a
Cluster node2_clus2 169.254.19.183 node2 e0b
Local = 169.254.47.194 169.254.19.183
Remote = 169.254.209.69 169.254.49.125
Cluster Vserver Id = 4294967293
Ping status:

Basic connectivity succeeds on 4 path(s)
Basic connectivity fails on 0 path(s)

Detected 9000 byte MTU on 4 path(s):
Local 169.254.47.194 to Remote 169.254.209.69
Local 169.254.47.194 to Remote 169.254.49.125
Local 169.254.19.183 to Remote 169.254.209.69
Local 169.254.19.183 to Remote 169.254.49.125
Larger than PMTU communication succeeds on 4 path(s)
RPC status:
2 paths up, 0 paths down (tcp check)
2 paths up, 0 paths down (udp check)
```

7. Verify that the cluster is healthy:

   ```
   cluster ring show
   ```

   All units must be either master or secondary.

8. Set up the switchless configuration for the ports in group 1.

   To avoid potential networking issues, you must disconnect the ports from group1 and reconnect them back-to-back as quickly as possible, for example, **in less than 20 seconds**.

   a. Disconnect all the cables from the ports in group1 at the same time.

      In the following example, the cables are disconnected from port "e0a" on each node, and cluster traffic continues through the switch and port "e0b" on each node:

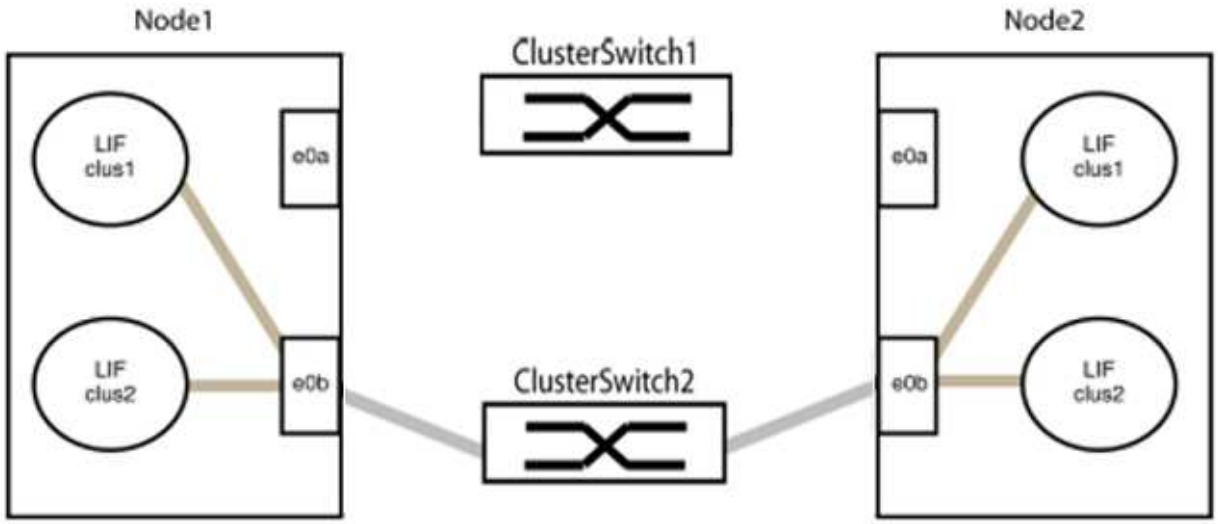

b. Cable the ports in group1 back-to-back.

In the following example, "e0a" on node1 is connected to "e0a" on node2:

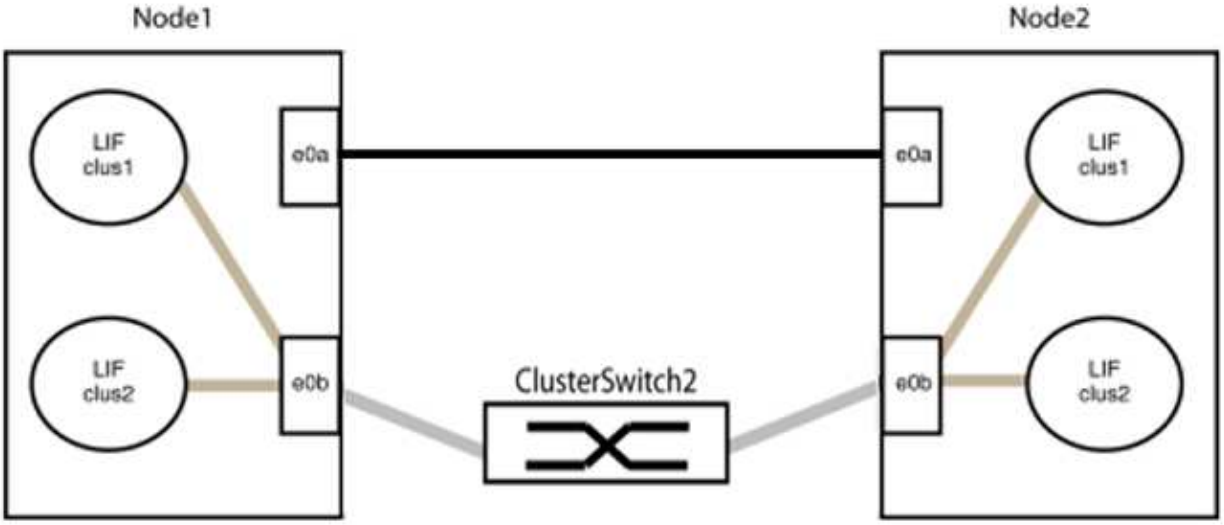

9. The switchless cluster network option transitions from `false` to `true`. This might take up to 45 seconds. Confirm that the switchless option is set to `true`:

`network options switchless-cluster show`

The following example shows that the switchless cluster is enabled:

```
cluster::*> network options switchless-cluster show
Enable Switchless Cluster: true
```

10. Verify the connectivity of the remote cluster interfaces:

ONTAP 9.9.1 and later

You can use the `network interface check cluster-connectivity` command to start an accessibility check for cluster connectivity and then display the details:

`network interface check cluster-connectivity start` and `network interface check cluster-connectivity show`

```
cluster1::*> network interface check cluster-connectivity start
```

NOTE: Wait for a number of seconds before running the `show` command to display the details.

```
cluster1::*> network interface check cluster-connectivity show
                                  Source           Destination
Packet
Node   Date                       LIF              LIF
Loss
------ -------------------------- ---------------- ----------------
-----------
node1
       3/5/2022 19:21:18 -06:00   node1_clus2      node2-clus1
none
       3/5/2022 19:21:20 -06:00   node1_clus2      node2_clus2
none
node2
       3/5/2022 19:21:18 -06:00   node2_clus2      node1_clus1
none
       3/5/2022 19:21:20 -06:00   node2_clus2      node1_clus2
none
```

All ONTAP releases

For all ONTAP releases, you can also use the `cluster ping-cluster -node <name>` command to check the connectivity:

```
cluster ping-cluster -node <name>
```

```
cluster1::*> cluster ping-cluster -node local
Host is node2
Getting addresses from network interface table...
Cluster node1_clus1 169.254.209.69 node1 e0a
Cluster node1_clus2 169.254.49.125 node1 e0b
Cluster node2_clus1 169.254.47.194 node2 e0a
Cluster node2_clus2 169.254.19.183 node2 e0b
Local = 169.254.47.194 169.254.19.183
Remote = 169.254.209.69 169.254.49.125
Cluster Vserver Id = 4294967293
Ping status:

Basic connectivity succeeds on 4 path(s)
Basic connectivity fails on 0 path(s)

Detected 9000 byte MTU on 4 path(s):
Local 169.254.47.194 to Remote 169.254.209.69
Local 169.254.47.194 to Remote 169.254.49.125
Local 169.254.19.183 to Remote 169.254.209.69
Local 169.254.19.183 to Remote 169.254.49.125
Larger than PMTU communication succeeds on 4 path(s)
RPC status:
2 paths up, 0 paths down (tcp check)
2 paths up, 0 paths down (udp check)
```

Before proceeding to the next step, you must wait at least two minutes to confirm a working back-to-back connection on group 1.

11. Set up the switchless configuration for the ports in group 2.

To avoid potential networking issues, you must disconnect the ports from group2 and reconnect them back-to-back as quickly as possible, for example, **in less than 20 seconds**.

a. Disconnect all the cables from the ports in group2 at the same time.

In the following example, the cables are disconnected from port "e0b" on each node, and cluster traffic continues through the direct connection between the "e0a" ports:

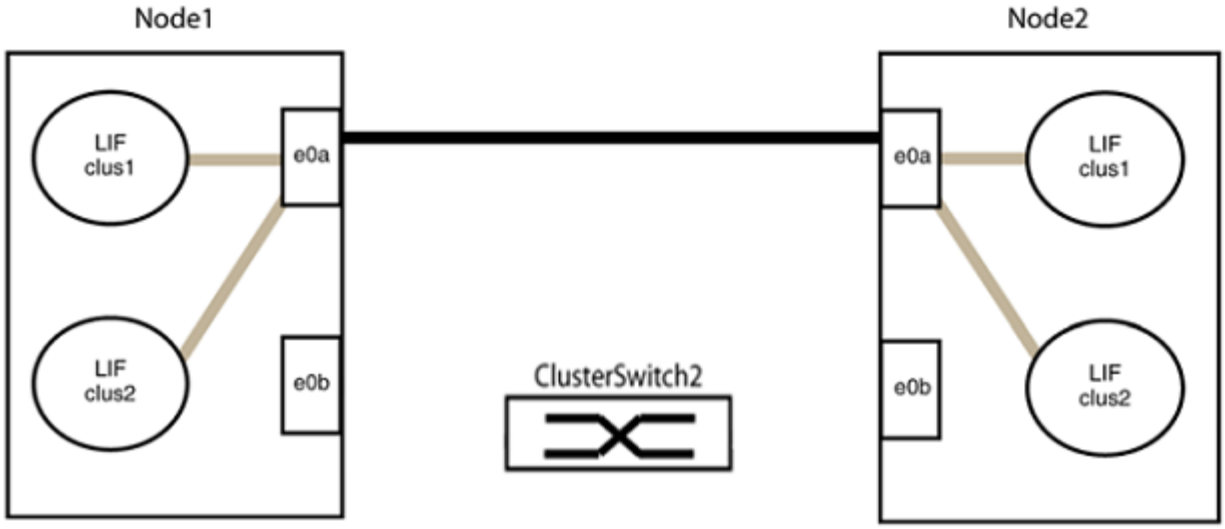

b. Cable the ports in group2 back-to-back.

   In the following example, "e0a" on node1 is connected to "e0a" on node2 and "e0b" on node1 is connected to "e0b" on node2:

Step 3: Verify the configuration

1. Verify that the ports on both nodes are correctly connected:

   `network device-discovery show -port cluster_port`

Show example

The following example shows that cluster ports "e0a" and "e0b" are correctly connected to the corresponding port on the cluster partner:

```
cluster::> net device-discovery show -port e0a|e0b
  (network device-discovery show)
Node/      Local  Discovered
Protocol   Port   Device (LLDP: ChassisID)  Interface  Platform
---------- ------ ------------------------- ---------- ----------
node1/cdp
           e0a    node2                     e0a        AFF-A300
           e0b    node2                     e0b        AFF-A300
node1/lldp
           e0a    node2 (00:a0:98:da:16:44) e0a        -
           e0b    node2 (00:a0:98:da:16:44) e0b        -
node2/cdp
           e0a    node1                     e0a        AFF-A300
           e0b    node1                     e0b        AFF-A300
node2/lldp
           e0a    node1 (00:a0:98:da:87:49) e0a        -
           e0b    node1 (00:a0:98:da:87:49) e0b        -
8 entries were displayed.
```

2. Re-enable auto-revert for the cluster LIFs:

   `network interface modify -vserver Cluster -lif * -auto-revert true`

3. Verify that all LIFs are home. This might take a few seconds.

   `network interface show -vserver Cluster -lif` *`lif_name`*

Show example

The LIFs have been reverted if the “Is Home” column is `true`, as shown for `node1_clus2` and `node2_clus2` in the following example:

```
cluster::> network interface show -vserver Cluster -fields curr-
port,is-home
vserver  lif           curr-port is-home
-------- ------------- --------- -------
Cluster  node1_clus1   e0a       true
Cluster  node1_clus2   e0b       true
Cluster  node2_clus1   e0a       true
Cluster  node2_clus2   e0b       true
4 entries were displayed.
```

If any cluster LIFS have not returned to their home ports, revert them manually from the local node:

`network interface revert -vserver Cluster -lif` *`lif_name`*

4. Check the cluster status of the nodes from the system console of either node:

   `cluster show`

   Show example

   The following example shows epsilon on both nodes to be `false`:

   ```
   Node  Health  Eligibility Epsilon
   ----- ------- ----------- --------
   node1 true    true        false
   node2 true    true        false
   2 entries were displayed.
   ```

5. Verify the connectivity of the remote cluster interfaces:

ONTAP 9.9.1 and later

You can use the `network interface check cluster-connectivity` command to start an accessibility check for cluster connectivity and then display the details:

`network interface check cluster-connectivity start` and `network interface check cluster-connectivity show`

```
cluster1::*> network interface check cluster-connectivity start
```

NOTE: Wait for a number of seconds before running the `show` command to display the details.

```
cluster1::*> network interface check cluster-connectivity show
                                  Source           Destination
Packet
Node   Date                       LIF              LIF
Loss
------ -------------------------- ---------------- ----------------
-----------
node1
       3/5/2022 19:21:18 -06:00   node1_clus2      node2-clus1
none
       3/5/2022 19:21:20 -06:00   node1_clus2      node2_clus2
none
node2
       3/5/2022 19:21:18 -06:00   node2_clus2      node1_clus1
none
       3/5/2022 19:21:20 -06:00   node2_clus2      node1_clus2
none
```

All ONTAP releases

For all ONTAP releases, you can also use the `cluster ping-cluster -node <name>` command to check the connectivity:

```
cluster ping-cluster -node <name>
```

```
cluster1::*> cluster ping-cluster -node local
Host is node2
Getting addresses from network interface table...
Cluster node1_clus1 169.254.209.69 node1 e0a
Cluster node1_clus2 169.254.49.125 node1 e0b
Cluster node2_clus1 169.254.47.194 node2 e0a
Cluster node2_clus2 169.254.19.183 node2 e0b
Local = 169.254.47.194 169.254.19.183
Remote = 169.254.209.69 169.254.49.125
Cluster Vserver Id = 4294967293
Ping status:

Basic connectivity succeeds on 4 path(s)
Basic connectivity fails on 0 path(s)

Detected 9000 byte MTU on 4 path(s):
Local 169.254.47.194 to Remote 169.254.209.69
Local 169.254.47.194 to Remote 169.254.49.125
Local 169.254.19.183 to Remote 169.254.209.69
Local 169.254.19.183 to Remote 169.254.49.125
Larger than PMTU communication succeeds on 4 path(s)
RPC status:
2 paths up, 0 paths down (tcp check)
2 paths up, 0 paths down (udp check)
```

6. If you suppressed automatic case creation, reenable it by invoking an AutoSupport message:

   ```
   system node autosupport invoke -node * -type all -message MAINT=END
   ```

   For more information, see NetApp KB Article 1010449: How to suppress automatic case creation during scheduled maintenance windows.

7. Change the privilege level back to admin:

   ```
   set -privilege admin
   ```

Legal notices

Legal notices provide access to copyright statements, trademarks, patents, and more.

Copyright

https://www.netapp.com/company/legal/copyright/

Trademarks

NETAPP, the NETAPP logo, and the marks listed on the NetApp Trademarks page are trademarks of NetApp, Inc. Other company and product names may be trademarks of their respective owners.

https://www.netapp.com/company/legal/trademarks/

Patents

A current list of NetApp owned patents can be found at:

https://www.netapp.com/pdf.html?item=/media/11887-patentspage.pdf

Privacy policy

https://www.netapp.com/company/legal/privacy-policy/

Copyright information

Copyright © 2026 NetApp, Inc. All Rights Reserved. Printed in the U.S. No part of this document covered by copyright may be reproduced in any form or by any means—graphic, electronic, or mechanical, including photocopying, recording, taping, or storage in an electronic retrieval system—without prior written permission of the copyright owner.

Software derived from copyrighted NetApp material is subject to the following license and disclaimer:

THIS SOFTWARE IS PROVIDED BY NETAPP “AS IS” AND WITHOUT ANY EXPRESS OR IMPLIED WARRANTIES, INCLUDING, BUT NOT LIMITED TO, THE IMPLIED WARRANTIES OF MERCHANTABILITY AND FITNESS FOR A PARTICULAR PURPOSE, WHICH ARE HEREBY DISCLAIMED. IN NO EVENT SHALL NETAPP BE LIABLE FOR ANY DIRECT, INDIRECT, INCIDENTAL, SPECIAL, EXEMPLARY, OR CONSEQUENTIAL DAMAGES (INCLUDING, BUT NOT LIMITED TO, PROCUREMENT OF SUBSTITUTE GOODS OR SERVICES; LOSS OF USE, DATA, OR PROFITS; OR BUSINESS INTERRUPTION) HOWEVER CAUSED AND ON ANY THEORY OF LIABILITY, WHETHER IN CONTRACT, STRICT LIABILITY, OR TORT (INCLUDING NEGLIGENCE OR OTHERWISE) ARISING IN ANY WAY OUT OF THE USE OF THIS SOFTWARE, EVEN IF ADVISED OF THE POSSIBILITY OF SUCH DAMAGE.

NetApp reserves the right to change any products described herein at any time, and without notice. NetApp assumes no responsibility or liability arising from the use of products described herein, except as expressly agreed to in writing by NetApp. The use or purchase of this product does not convey a license under any patent rights, trademark rights, or any other intellectual property rights of NetApp.

The product described in this manual may be protected by one or more U.S. patents, foreign patents, or pending applications.

LIMITED RIGHTS LEGEND: Use, duplication, or disclosure by the government is subject to restrictions as set forth in subparagraph (b)(3) of the Rights in Technical Data -Noncommercial Items at DFARS 252.227-7013 (FEB 2014) and FAR 52.227-19 (DEC 2007).

Data contained herein pertains to a commercial product and/or commercial service (as defined in FAR 2.101) and is proprietary to NetApp, Inc. All NetApp technical data and computer software provided under this Agreement is commercial in nature and developed solely at private expense. The U.S. Government has a non-exclusive, non-transferrable, nonsublicensable, worldwide, limited irrevocable license to use the Data only in connection with and in support of the U.S. Government contract under which the Data was delivered. Except as provided herein, the Data may not be used, disclosed, reproduced, modified, performed, or displayed without the prior written approval of NetApp, Inc. United States Government license rights for the Department of Defense are limited to those rights identified in DFARS clause 252.227-7015(b) (FEB 2014).

Trademark information

NETAPP, the NETAPP logo, and the marks listed at http://www.netapp.com/TM are trademarks of NetApp, Inc. Other company and product names may be trademarks of their respective owners.