Cisco Nexus 9336C-FX2 or 9336C-FX2-T

Install and maintain

NetApp
March 06, 2026

This PDF was generated from https://docs.netapp.com/us-en/ontap-systems-switches/switch-cisco-9336c-fx2-storage/configure-switch-overview-9336c-storage.html on March 06, 2026. Always check docs.netapp.com for the latest.

Table of Contents

Cisco Nexus 9336C-FX2 or 9336C-FX2-T . . . 1
- Get started . . . 1
  - Installation and setup workflow for Cisco Nexus 9336C-FX2 9336C-FX2-T storage switches . . . 1
  - Configuration requirements for Cisco Nexus 9336C-FX2 and 9336C-FX2-T storage switches . . . 1
  - Components and part numbers for Cisco Nexus 9336C-FX2 and 9336C-FX2-T storage switches . . . 2
  - Documentation requirements for Cisco Nexus 9336C-FX2 and 9336C-FX2-T storage switches . . . 3
  - Smart Call Home requirements . . . 5
- Install the hardware . . . 5
  - Hardware install workflow for Cisco Nexus 9336C-FX2 and 9336C-FX2-T storage switches . . . 5
  - Complete the Cisco Nexus 9336C-FX2 or 9336C-FX2-T cabling worksheet . . . 6
  - Install the 9336C-FX2 and 9336C-FX2-T storage switches . . . 11
  - Install Cisco Nexus 9336C-FX2 and 9336C-FX2-T switches in a NetApp cabinet . . . 12
  - Review cabling and configuration considerations . . . 16
- Configure the software . . . 17
  - Software install workflow for Cisco Nexus 9336C-FX2 and 9336C-FX2-T storage switches . . . 17
  - Configure the 9336C-FX2 and 9336C-FX2-T storage switches . . . 17
  - Prepare to install or upgrade NX-OS software and RCF . . . 20
  - Install or upgrade the NX-OS software . . . 23
  - Install or upgrade the RCF . . . 38
  - Verify your SSH configuration . . . 59
  - Reset the 9336C-FX2 and 9336C-FX2-T storage switches to factory defaults . . . 61
- Replace Cisco Nexus 9336C-FX2 and 9336C-FX2-T storage switches . . . 61

Cisco Nexus 9336C-FX2 or 9336C-FX2-T

Get started

Installation and setup workflow for Cisco Nexus 9336C-FX2 9336C-FX2-T storage switches

The Cisco Nexus 9336C-FX2 and 9336C-FX2-T switches are part of the Cisco Nexus 9000 platform and can be installed in a NetApp system cabinet.

Cisco Nexus 9336C-FX2 (36 ports) is high-port density cluster/storage/data switch. Cisco Nexus 9336C-FX2-T (12 ports) is a low-port-density, high performance switch that supports 10/25/40/100GbE configurations.

Follow these workflow steps to install and setup your to Cisco 9336C-FX2 and 9336C-FX2-T switches.

1. **Review the configuration requirements**

Review the configuration requirements for the 9336C-FX2 and 9336C-FX2-T storage switches.

2. **Review the components and part numbers**

Review the components and part numbers for the 9336C-FX2 and 9336C-FX2-T storage switches.

3. **Review the required documentation**

Review specific switch and controller documentation to set up your 9336C-FX2 and 9336C-FX2-T switches and the ONTAP cluster.

4. **Review the Smart Call Home requirements**

Review the requirements for the Cisco Smart Call Home feature, used to monitor the hardware and software components on your network.

5. **Install the hardware**

Install the switch hardware.

6. **Configure the software**

Configure the switch software.

Configuration requirements for Cisco Nexus 9336C-FX2 and 9336C-FX2-T storage switches

For Cisco Nexus 9336C-FX2 and 9336C-FX2-T switches installation and maintenance, make sure to review configuration and network requirements.

Configuration requirements

For configuration, you need the appropriate number and type of cables and cable connectors for your switches.

Depending on the type of switch you are initially configuring, you need to connect to the switch console port with the included console cable; you also need to provide specific network information.

Network requirements

You need the following network information for all switch configurations.

- IP subnet for management network traffic
- Host names and IP addresses for each of the storage system controllers and all applicable switches
- Most storage system controllers are managed through the e0M interface by connecting to the Ethernet service port (wrench icon). On AFF A800 and AFF A700s systems, the e0M interface uses a dedicated Ethernet port.
- Refer to the Hardware Universe for the latest information.

For more information about the initial configuration of your switch, see the following guide: Cisco Nexus 9336C-FX2 Installation and Upgrade Guide.

What's next

After you've reviewed the configuration requirements, you can confirm your components and part numbers.

Components and part numbers for Cisco Nexus 9336C-FX2 and 9336C-FX2-T storage switches

For Cisco Nexus 9336C-FX2 and 9336C-FX2-T storage switch installation and maintenance, be sure to review the list of components and part numbers.

The following table lists the part number and description for the 9336C-FX2 and 9336C-FX2-T storage switches, fans, and power supplies:

Part number	Description
X190200-CS-PE	Cluster Switch, N9336C 36Pt PTSX 10/25/40/100G
X190200-CS-PI	Cluster Switch, N9336C 36Pt PSIN 10/25/40/100G
X190212-CS-PE	Cluster Switch, N9336C 12Pt (9336C-FX2-T) PTSX 10/25/40/100G
X190212-CS-PI	Cluster Switch, N9336C 12Pt (9336C-FX2-T) PSIN 10/25/40/100G
SW-N9K-FX2-24P-UPG	SW, Cisco 9336CFX2 24-Port POD License
X190210-FE-PE	N9K-9336C, FTE, PTSX, 36PT 10/25/40/100GQSFP28
X190210-FE-PI	N9K-9336C, FTE, PSIN, 36PT 10/25/40/100GQSFP28

Part number	Description
X190002	Accessory Kit X190001/X190003
X-NXA-PAC-1100W-PE2	N9K-9336C AC 1100W PSU - Port side exhaust airflow
X-NXA-PAC-1100W-PI2	N9K-9336C AC 1100W PSU - Port side Intake airflow
X-NXA-FAN-65CFM-PE	N9K-9336C 65CFM, Port side exhaust airflow
X-NXA-FAN-65CFM-PI	N9K-9336C 65CFM, Port side intake airflow

Cisco Smart licenses for 9336C-FX2-T ports only

In order to activate more than 12 ports on your Cisco Nexus 9336C-FX-T storage switch, you must purchase a Cisco Smart license. Cisco Smart licenses are managed through Cisco Smart accounts.

1. Create a new Smart account, if required. See Create a new Smart account for details.
2. Request access to an existing Smart account. See Request access to an existing Smart account for details.

> Once you have purchased your Smart license, install the appropriate RCF to enable and configure all 36 available ports for use.

What's next

After you've confirmed your components and part numbers, you can review the required documentation.

Documentation requirements for Cisco Nexus 9336C-FX2 and 9336C-FX2-T storage switches

For Cisco Nexus 9336C-FX2 and 9336C-FX2-T switch installation and maintenance, make sure to review specific switch and controller documentation to set up your Cisco 9336-FX2 switches and ONTAP cluster.

Switch documentation

To set up the Cisco Nexus 9336C-FX2 switches, you need the following documentation from the Cisco Nexus 9000 Series Switches Support page:

Document title	Description
Nexus 9000 Series Hardware Installation Guide	Provides detailed information about site requirements, switch hardware details, and installation options.
Cisco Nexus 9000 Series Switch Software Configuration Guides (choose the guide for the NX-OS release installed on your switches)	Provides initial switch configuration information that you need before you can configure the switch for ONTAP operation.

Document title	Description
Cisco Nexus 9000 Series NX-OS Software Upgrade and Downgrade Guide (choose the guide for the NX-OS release installed on your switches)	Provides information on how to downgrade the switch to ONTAP supported switch software, if necessary.
Cisco Nexus 9000 Series NX-OS Command Reference Master Index	Provides links to the various command references provided by Cisco.
Cisco Nexus 9000 MIBs Reference	Describes the Management Information Base (MIB) files for the Nexus 9000 switches.
Nexus 9000 Series NX-OS System Message Reference	Describes the system messages for Cisco Nexus 9000 series switches, those that are informational, and others that might help diagnose problems with links, internal hardware, or the system software.
Cisco Nexus 9000 Series NX-OS Release Notes (choose the notes for the NX-OS release installed on your switches)	Describes the features, bugs, and limitations for the Cisco Nexus 9000 Series.
Regulatory Compliance and Safety Information for Cisco Nexus 9000 Series	Provides international agency compliance, safety, and statutory information for the Nexus 9000 series switches.

ONTAP systems documentation

To set up an ONTAP system, you need the following documents for your version of the operating system from ONTAP 9.

Name	Description
Controller-specific *Installation and Setup Instructions*	Describes how to install NetApp hardware.
ONTAP documentation	Provides detailed information about all aspects of the ONTAP releases.
Hardware Universe	Provides NetApp hardware configuration and compatibility information.

Rail kit and cabinet documentation

To install a Cisco 9336-FX2 switch in a NetApp cabinet, see the following hardware documentation.

Name	Description
42U System Cabinet, Deep Guide	Describes the FRUs associated with the 42U system cabinet, and provides maintenance and FRU replacement instructions.

Name	Description
Install a Cisco 9336-FX2 switch in a NetApp Cabinet	Describes how to install a Cisco Nexus 9336C-FX2 switch in a four-post NetApp cabinet.

Smart Call Home requirements

To use Smart Call Home, you must configure a cluster network switch to communicate using email with the Smart Call Home system. In addition, you can optionally set up your cluster network switch to take advantage of Cisco's embedded Smart Call Home support feature.

Smart Call Home monitors the hardware and software components on your network. When a critical system configuration occurs, it generates an email-based notification and raises an alert to all the recipients that are configured in your destination profile.

Smart Call Home monitors the hardware and software components on your network. When a critical system configuration occurs, it generates an email-based notification and raises an alert to all the recipients that are configured in your destination profile.

Before you can use Smart Call Home, be aware of the following requirements:

- An email server must be in place.
- The switch must have IP connectivity to the email server.
- The contact name (SNMP server contact), phone number, and street address information must be configured. This is required to determine the origin of messages received.
- A CCO ID must be associated with an appropriate Cisco SMARTnet Service contract for your company.
- Cisco SMARTnet Service must be in place for the device to be registered.

The Cisco support site contains information about the commands to configure Smart Call Home.

Install the hardware

Hardware install workflow for Cisco Nexus 9336C-FX2 and 9336C-FX2-T storage switches

To install and configure the hardware for 9336C-FX2 and 9336C-FX2-T storage switches, follow these steps:

1. **Complete the cabling worksheet**

The sample cabling worksheet provides examples of recommended port assignments from the switches to the controllers. The blank worksheet provides a template that you can use in setting up your cluster.

2. **Install the switch**

Install the 9336C-FX2 and 9336C-FX2-T storage switches.

3 Install the switch in a NetApp cabinet

Install the 9336C-FX2 and 9336C-FX2-T switches and pass-through panel in a NetApp cabinet as required.

4 Review cabling and configuration considerations

Before configuring your 9336C-FX2 and 9336C-FX2-T switches, review the cabling and configuration considerations.

Complete the Cisco Nexus 9336C-FX2 or 9336C-FX2-T cabling worksheet

If you want to document the supported platforms, download a PDF of this page and complete the cabling worksheet.

The sample cabling worksheet provides examples of recommended port assignments from the switches to the controllers. The blank worksheet provides a template that you can use in setting up your cluster.

- 9336C-FX2 sample cabling worksheet
- 9336C-FX2 blank cabling worksheet
- 9336C-FX2-T sample cabling worksheet (12-port)
- 9336C-FX2-T blank cabling worksheet (12-port)

9336C-FX2 sample cabling worksheet

The sample port definition on each pair of switches is as follows:

Cluster switch A		Cluster switch B	
Switch port	Node and port usage	Switch port	Node and port usage
1	4x100GbE node 1	1	4x100GbE node 1
2	4x100GbE node 2	2	4x100GbE node 2
3	4x100GbE node 3	3	4x100GbE node 3
4	4x100GbE node 4	4	4x100GbE node 4
5	4x100GbE node 5	5	4x100GbE node 5
6	4x100GbE node 6	6	4x100GbE node 6
7	4x100GbE node 7	7	4x100GbE node 7
8	4x100GbE node 8	8	4x100GbE node 8
9	4x100GbE node 9	9	4x100GbE node 9

Cluster switch A		Cluster switch B	
10	4x100GbE node 10	10	4x100GbE node 10
11	4x100GbE node 11	11	4x100GbE node 11
12	4x100GbE node 12	12	4x100GbE node 12
13	4x100GbE node 13	13	4x100GbE node 13
14	4x100GbE node 14	14	4x100GbE node 14
15	4x100GbE node 15	15	4x100GbE node 15
16	4x100GbE node 16	16	4x100GbE node 16
17	4x100GbE node 17	17	4x100GbE node 17
18	4x100GbE node 18	18	4x100GbE node 18
19	4x100GbE node 19	19	4x100GbE node 19
20	4x100GbE node 20	20	4x100GbE node 20
21	4x100GbE node 21	21	4x100GbE node 21
22	4x100GbE node 22	22	4x100GbE node 22
23	4x100GbE node 23	23	4x100GbE node 23
24	4x100GbE node 24	24	4x100GbE node 24
25	4x100GbE node 25	25	4x100GbE node 25
26	4x100GbE node 26	26	4x100GbE node 26
27	4x100GbE node 27	27	4x100GbE node 27
28	4x100GbE node 28	28	4x100GbE node 28
29	4x100GbE node 29	29	4x100GbE node 29
30	4x100GbE node 30	30	4x100GbE node 30
31	4x100GbE node 31	31	4x100GbE node 31

Cluster switch A		Cluster switch B	
32	4x100GbE node 32	32	4x100GbE node 32
33	4x100GbE node 33	33	4x100GbE node 33
30	4x100GbE node 30	30	4x100GbE node 33
34	4x100GbE node 34	34	4x100GbE node 34
35	4x100GbE node 35	35	4x100GbE node 35
36	4x100GbE node 36	36	4x100GbE node 36

9336C-FX2 blank cabling worksheet

You can use the blank cabling worksheet to document the platforms that are supported as nodes in a cluster. The *Supported Cluster Connections* section of the Hardware Universe defines the cluster ports used by the platform.

Cluster switch A		Cluster switch B	
1		1	
2		2	
3		3	
4		4	
5		5	
6		6	
7		7	
8		8	
9		9	
10		10	
11		11	
12		12	

Cluster switch A		Cluster switch B	
13		13	
14		14	
15		15	
16		16	
17		17	
18		18	
19		19	
20		20	
21		21	
22		22	
23		23	
24		24	
25		25	
26		26	
27		27	
28		28	
29		29	
30		30	
31		31	
32		32	
33		33	
34		34	

Cluster switch A		Cluster switch B	
35		35	
36		36	

9336C-FX2-T sample cabling worksheet (12-port)

The sample port definition on each pair of switches is as follows:

Cluster switch A		Cluster switch B	
Switch port	Node and port usage	Switch port	Node and port usage
1	4x100GbE node 1	1	4x100GbE node 1
2	4x100GbE node 2	2	4x100GbE node 2
3	4x100GbE node 3	3	4x100GbE node 3
4	4x100GbE node 4	4	4x100GbE node 4
5	4x100GbE node 5	5	4x100GbE node 5
6	4x100GbE node 6	6	4x100GbE node 6
7	4x100GbE node 7	7	4x100GbE node 7
8	4x100GbE node 8	8	4x100GbE node 8
9	4x100GbE node 9	9	4x100GbE node 9
10	4x100GbE node 10	10	4x100GbE node 10
11 though 36	Requires license	11 through 36	Requires license

9336C-FX2-T blank cabling worksheet (12-port)

You can use the blank cabling worksheet to document the platforms that are supported as nodes in a cluster.

Cluster switch A		Cluster switch B	
1		1	
2		2	

Cluster switch A		Cluster switch B	
3		3	
4		4	
5		5	
6		6	
7		7	
8		8	
9		9	
10		10	
11 through 36	Requires license	11 through 36	Requires license

See the Hardware Universe for more information on switch ports.

What's next

After you've completed your cabling worksheets, you can install the switch.

Install the 9336C-FX2 and 9336C-FX2-T storage switches

Follow this procedure to install Cisco Nexus 9336C-FX2 and 9336C-FX2-T storage switches.

Before you begin

Make sure you have the following:

- Access to an HTTP, FTP or TFTP server at the installation site to download the applicable NX-OS and reference configuration file (RCF) releases.
- Applicable NX-OS version, downloaded from the Cisco Software Download page.
- Applicable licenses, network and configuration information, and cables.
- Completed cabling worksheets.
- Applicable NetApp storage network and management network RCFs downloaded from the NetApp Support Site at mysupport.netapp.com.

  All Cisco storage network and management network switches arrive with the standard Cisco factory-default configuration. These switches also have the current version of the NX-OS software but do not have the RCFs loaded.

- Required switch documentation. See Required documentation for more information.

Steps

1. Rack the network and management network switches and controllers.

If you are installing your…	Then…
Cisco Nexus 9336C-FX2 in a NetApp system cabinet	See Install switch in NetApp cabinet for instructions to install the switch in a NetApp cabinet.
Equipment in a Telco rack	See the procedures provided in the switch hardware installation guides and the NetApp installation and setup instructions.

2. Cable the network and management network switches to the controllers using the completed cabling worksheets.
3. Power on the network and management network switches and controllers.

What's next?

Optionally, you can install a Cisco Nexus 9336C-FX2 switch in a NetApp cabinet. Otherwise, go to configure the switch.

Install Cisco Nexus 9336C-FX2 and 9336C-FX2-T switches in a NetApp cabinet

Depending on your configuration, you might need to install the Cisco Nexus 9336C-FX2 9336C-FX2-T switches and pass-through panel in a NetApp cabinet. Standard brackets are included with the switch.

Before you begin

Make sure you have the following:

- For each switch, you must supply the eight 10-32 or 12-24 screws and clip nuts to mount the brackets and slider rails to the front and rear cabinet posts.
- You must use the Cisco standard rail kit to install the switch in a NetApp cabinet.

> The jumper cords are not included with the pass-through kit and should be included with your switches. If they were not shipped with the switches, you can order them from NetApp (part number X1558A-R6).

Required documentation

Review the initial preparation requirements, kit contents, and safety precautions in the Cisco Nexus 9000 Series Hardware Installation Guide.

Steps

1. Install the pass-through blanking panel in the NetApp cabinet.

   The pass-through panel kit is available from NetApp (part number X8784-R6).

   The NetApp pass-through panel kit contains the following hardware:

   - One pass-through blanking panel
   - Four 10-32 x .75 screws
   - Four 10-32 clip nuts

a. Determine the vertical location of the switches and blanking panel in the cabinet.

   In this procedure, the blanking panel will be installed in U40.

b. Install two clip nuts on each side in the appropriate square holes for front cabinet rails.

c. Center the panel vertically to prevent intrusion into adjacent rack space, and then tighten the screws.

d. Insert the female connectors of both 48-inch jumper cords from the rear of the panel and through the brush assembly.

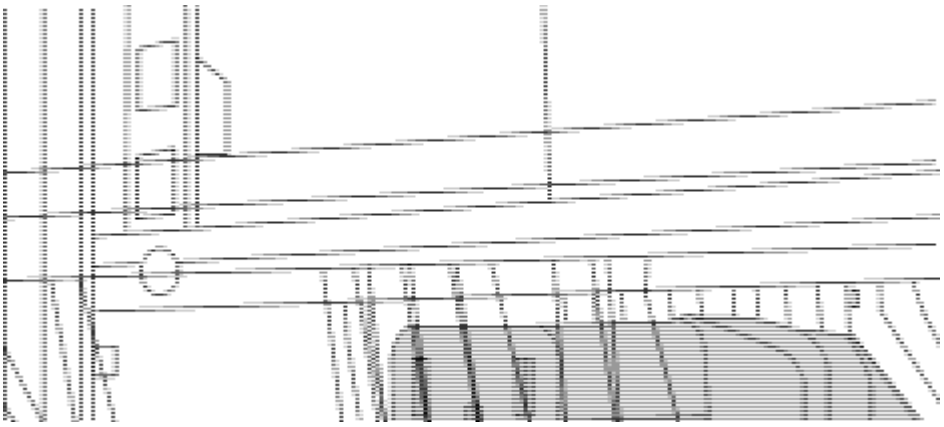

(1) Female connector of the jumper cord.

2. Install the rack-mount brackets on the Nexus 9336C-FX2 switch chassis.

   a. Position a front rack-mount bracket on one side of the switch chassis so that the mounting ear is aligned with the chassis faceplate (on the PSU or fan side), and then use four M4 screws to attach the bracket to the chassis.

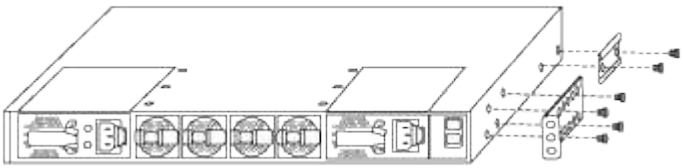

   b. Repeat step 2a with the other front rack-mount bracket on the other side of the switch.

   c. Install the rear rack-mount bracket on the switch chassis.

   d. Repeat step 2c with the other rear rack-mount bracket on the other side of the switch.

3. Install the clip nuts in the square hole locations for all four IEA posts.

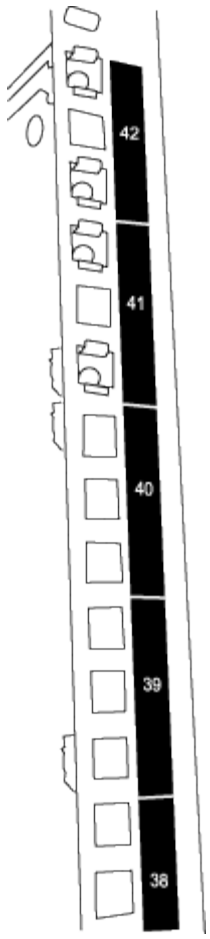

The two 9336C-FX2 switches will always be mounted in the top 2U of the cabinet RU41 and 42.

4. Install the slider rails in the cabinet.
   a. Position the first slider rail at the RU42 mark on the back side of the rear left post, insert screws with the matching thread type, and then tighten the screws with your fingers.

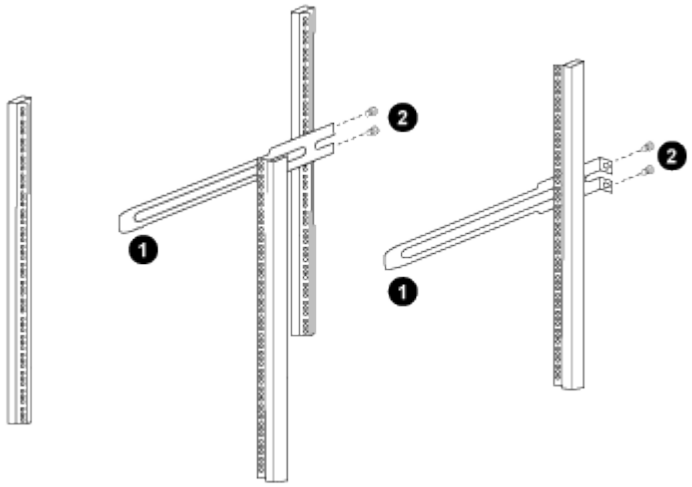

   (1) As you gently slide the slider rail, align it to the screw holes in the rack.

   (2) Tighten the screws of the slider rails to the cabinet posts.

   b. Repeat step 4a for the right side rear post.

c. Repeat steps 4a and 4b at the RU41 locations on the cabinet.

5. Install the switch in the cabinet.

> This step requires two people: one person to support the switch from the front and another to guide the switch into the rear slider rails.

a. Position the back of the switch at RU41.

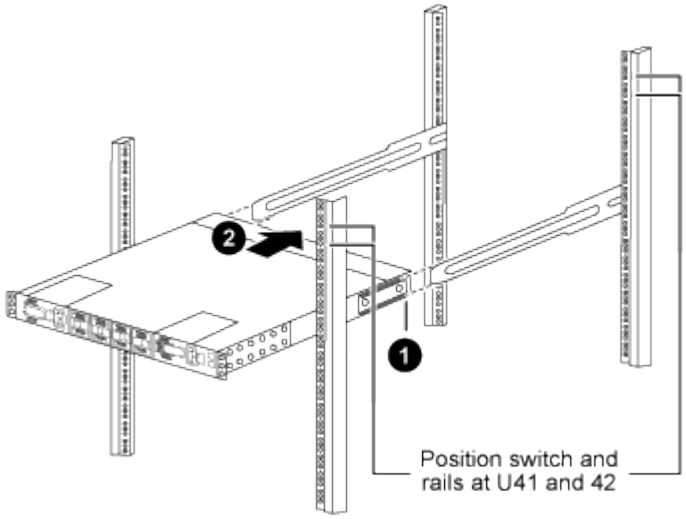

(1) As the chassis is pushed toward the rear posts, align the two rear rack-mount guides with the slider rails.

(2) Gently slide the switch until the front rack-mount brackets are flush with the front posts.

b. Attach the switch to the cabinet.

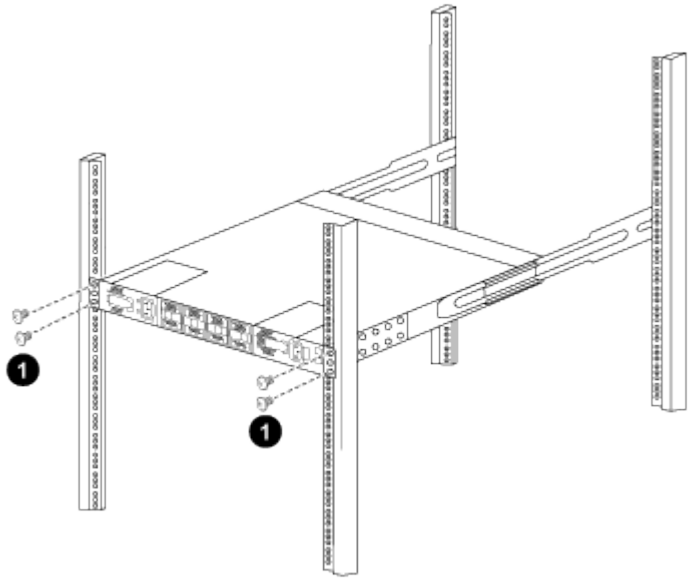

(1) With one person holding the front of the chassis level, the other person should fully tighten the four rear screws to the cabinet posts.

c. With the chassis now supported without assistance, fully tighten the front screws to the posts.

d. Repeat steps 5a through 5c for the second switch at the RU42 location.

> By using the fully installed switch as a support, it is not necessary to hold the front of the second switch during the installation process.

6. When the switches are installed, connect the jumper cords to the switch power inlets.
7. Connect the male plugs of both jumper cords to the closest available PDU outlets.

> To maintain redundancy, the two cords must be connected to different PDUs.

8. Connect the management port on each 9336C-FX2 switch to either of the management switches (if ordered) or connect them directly to your management network.

   The management port is the upper-right port located on the PSU side of the switch. The CAT6 cable for each switch needs to be routed through the pass-through panel after the switches are installed to connect to the management switches or management network.

What's next

After you've installed the switches in the NetApp cabinet, you can configure the Cisco Nexus 9336C-FX2 and 9336C-FX2-T switches.

Review cabling and configuration considerations

Before configuring your 9336C-FX2 and 9336C-FX2-T switches, review the cabling and configuration requirements.

Support for NVIDIA CX6, CX6-DX, and CX7 Ethernet ports

If you are connecting a switch port to an ONTAP controller using NVIDIA ConnectX-6 (CX6), ConnectX-6 Dx (CX6-DX), or ConnectX-7 (CX7) NIC ports, you must hard-code the switch port speed.

```
(s1)(config)# interface Ethernet1/19
For 100GbE speed:
(s1)(config-if)# speed 100000
For 40GbE speed:
(s1)(config-if)# speed 40000
(s1)(config-if)# no negotiate auto
(s1)(config-if)# exit
(s1)(config)# exit
Save the changes:
(s1)# copy running-config startup-config
```

Related information

- Refer to Hardware Universe for more information on switch ports.
- See What additional information do I need to install my equipment that is not in HWU? for more information about switch installation requirements.

Configure the software

Software install workflow for Cisco Nexus 9336C-FX2 and 9336C-FX2-T storage switches

To install and configure software for Cisco Nexus 9336C-FX2 and 9336C-FX2-T storage switches, follow these steps:

1. **Configure the switch**

   Configure the 9336C-FX2 and 9336C-FX2-T storage switches.

2. **Prepare to install the NX-OS software and RCF**

   The Cisco NX-OS software and reference configuration files (RCFs) must be installed on Cisco 9336C-FX2 and 9336C-FX2-T storage switches.

3. **Install or upgrade the NX-OS software**

   Download and install or upgrade the NX-OS software on the Cisco 9336C-FX2 and 9336C-FX2-T storage switches.

4. **Install or upgrade the RCF**

   Install or upgrade the RCF after setting up the Cisco 9336C-FX2 and 9336C-FX2-T switches for the first time. You can also use this procedure to upgrade your RCF version.

5. **Verify SSH configuration**

   Verify that SSH is enabled on the switches to use the Ethernet Switch Health Monitor (CSHM) and log collection features.

6. **Reset the switch to factory defaults**

   Erase the 9336C-FX2 and 9336C-FX2-T storage switches settings.

Configure the 9336C-FX2 and 9336C-FX2-T storage switches

Follow this procedure to configure the Cisco Nexus 9336C-FX2 and 9336C-FX2-T switches.

Before you begin

Make sure you have the following:

- Access to an HTTP, FTP or TFTP server at the installation site to download the applicable NX-OS and reference configuration file (RCF) releases.

- Applicable NX-OS version, downloaded from the Cisco software download page.
- Applicable licenses, network and configuration information, and cables.
- Completed cabling worksheets.
- Applicable NetApp network and management network RCFs downloaded from the NetApp Support Site at mysupport.netapp.com. All Cisco network and management network switches arrive with the standard Cisco factory-default configuration. These switches also have the current version of the NX-OS software but do not have the RCFs loaded.
- Required switch documentation. See Required documentation for more information.

Steps

1. Perform an initial configuration of the network switches.

   Provide applicable responses to the following initial setup questions when you first boot the switch. Your site's security policy defines the responses and services to enable.

Prompt	Response
Abort Auto Provisioning and continue with normal setup? (yes/no)	Respond with **yes**. The default is no.
Do you want to enforce secure password standard? (yes/no)	Respond with **yes**. The default is yes.
Enter the password for admin.	The default password is "admin"; you must create a new, strong password. A weak password can be rejected.
Would you like to enter the basic configuration dialog? (yes/no)	Respond with **yes** at the initial configuration of the switch.
Create another login account? (yes/no)	Your answer depends on your site's policies on alternate administrators. The default is **no**.
Configure read-only SNMP community string? (yes/no)	Respond with **no**. The default is no.
Configure read-write SNMP community string? (yes/no)	Respond with **no**. The default is no.
Enter the switch name.	The switch name is limited to 63 alphanumeric characters.
Continue with Out-of-band (mgmt0) management configuration? (yes/no)	Respond with **yes** (the default) at that prompt. At the mgmt0 IPv4 address: prompt, enter your IP address: ip_address.
Configure the default-gateway? (yes/no)	Respond with **yes**. At the IPv4 address of the default-gateway: prompt, enter your default_gateway.

Prompt	Response
Configure advanced IP options? (yes/no)	Respond with **no**. The default is no.
Enable the telnet service? (yes/no)	Respond with **no**. The default is no.
Enabled SSH service? (yes/no)	Respond with **yes**. The default is yes. SSH is recommended when using Ethernet Switch Health Monitor (CSHM) for its log collection features. SSHv2 is also recommended for enhanced security.
Enter the type of SSH key you want to generate (dsa/rsa/rsa1).	The default is **rsa**.
Enter the number of key bits (1024-2048).	Enter the number of key bits from 1024 to 2048.
Configure the NTP server? (yes/no)	Respond with **no**. The default is no.
Configure default interface layer (L3/L2)	Respond with **L2**. The default is L2.
Configure default switch port interface state (shut/noshut)	Respond with **noshut**. The default is noshut.
Configure CoPP system profile (strict/moderate/lenient/dense)	Respond with **strict**. The default is strict.
Would you like to edit the configuration? (yes/no)	You should see the new configuration at this point. Review and make any necessary changes to the configuration you just entered. Respond with **no** at the prompt if you are satisfied with the configuration. Respond with **yes** if you want to edit your configuration settings.
Use this configuration and save it? (yes/no)	Respond with **yes** to save the configuration. This automatically updates the kickstart and system images. If you do not save the configuration at this stage, none of the changes will be in effect the next time you reboot the switch.

2. Verify the configuration choices you made in the display that appears at the end of the setup, and make sure that you save the configuration.
3. Check the version on the network switches, and if necessary, download the NetApp-supported version of

the software to the switches from the Cisco software download page.

What's next?

After you've configured your switches, you can prepare to install the NX-OS software and RCF.

Prepare to install or upgrade NX-OS software and RCF

Before you install the NX-OS software and the Reference Configuration File (RCF), follow this procedure.

About the examples

The examples in this procedure use the following switch and node nomenclature:

- The names of the two Cisco switches are s1 and s2.
- The node names are cluster1-01 and cluster1-02.

About this task

The procedure requires the use of both ONTAP commands and Cisco Nexus 9000 Series Switches commands; ONTAP commands are used unless otherwise indicated.

Steps

1. If AutoSupport is enabled, suppress automatic case creation by invoking an AutoSupport message:
   `system node autosupport invoke -node * -type all -message MAINT=xh`

   where x is the duration of the maintenance window in hours.

   > The AutoSupport message notifies technical support of this maintenance task so that automatic case creation is suppressed during the maintenance window.

2. Change the privilege level to advanced, entering **y** when prompted to continue:

   ```
   set -privilege advanced
   ```

   The advanced prompt (`*>`) appears.

3. Display how many interfaces are configured in each node for each switch:

   ```
   network device-discovery show -protocol lldp
   ```

Show example

```
cluster1::*> network device-discovery show -protocol lldp

Node/       Local  Discovered
Protocol    Port   Device (LLDP: ChassisID)  Interface
Platform
----------- ------ ------------------------- -----------------
--------
cluster1-02/lldp
            e5a    s1                        Eth1/2            N9K-
C9336C
            e3b    s2                        Eth1/2            N9K-
C9336C
cluster1-01/lldp
            e5a    s1                        Eth1/1            N9K-
C9336C
            e3b    s2                        Eth1/1            N9K-
C9336C
.
.
```

4. Check the administrative or operational status of each node storage port and storage shelf port.
   a. Display the node storage port attributes:

```
storage port show
```

Show example

```
cluster1::*> storage port show
Speed                      VLAN
Node           Port Type  Mode    (Gb/s) State    Status      ID
-------------- ---- ----- ------- ------ -------- --------- ----
cluster1-01
               e5a  ENET  storage    100 enabled  online      -
               e3b  ENET  storage    100 enabled  online      -
cluster1-02

               e5a  ENET  storage    100 enabled  online      -
               e3b  ENET  storage    100 enabled  online      -

.
.
```

b. Display the storage shelf port attributes:

```
storage shelf port show
```

Show example

```
cluster1::*> storage shelf port show

Shelf ID Module State        Internal?
----- -- ------ ------------ ---------
1.4
       0 A      connected    false
       1 A      connected    false
       2 B      connected    false
       3 B      connected    false
.
.
```

c. Verify that switch health monitoring (CSHM) is enabled for the switch so that the switches are monitored:

```
system switch ethernet show
```

Show example

```
cluster1::> system switch ethernet show
  Switch                    Type               Address          Model
  ----------------- ------------------ ----------------
---------------
  s1                        storage-network    1.2.3.4          N9K-
C9336C-FX2
     Serial Number: FFFXXXXXXX1
      Is Monitored: true
            Reason: None
  Software Version: Cisco Nexus Operating System (NX-OS)
Software, Version
                    10.3(4a)
    Version Source: CDP/ISDP
  s2                        storage-network    2.3.4.5          N9K-
C9336C-FX2
     Serial Number: FEEXXXXXXX2
      Is Monitored: true
            Reason: None
  Software Version: Cisco Nexus Operating System (NX-OS)
Software, Version
                    10.3(4a)
    Version Source: CDP/ISDP
```

What's next?

After you've prepared to install the NX-OS software and RCF, you can install or upgrade the NX-OS software.

Install or upgrade the NX-OS software

Follow this procedure to install or upgrade the NX-OS software on the Nexus 9336C-FX2 and 9336C-FX2-T switches.

Before you begin, complete the procedure in Prepare to install NX-OS and RCF.

Review requirements

Before you begin

Make sure you have the following:

- A current backup of the switch configuration.
- A fully functioning cluster (no errors in the logs or similar issues).

Suggested documentation

- Cisco Ethernet switch page

Consult the switch compatibility table for the supported ONTAP and NX-OS versions.

- Software Upgrade and downgrade guides

  Refer to the appropriate software and upgrade guides available on the Cisco website for complete documentation on the Cisco switch upgrade and downgrade procedures.

- Cisco Nexus 9000 and 3000 Upgrade and ISSU Matrix

  Provides information on Disruptive Upgrade/Downgrade for Cisco NX-OS software on Nexus 9000 Series Switches based on your current and target releases.

  On the page, select **Disruptive Upgrade** and select your current release and target release from the dropdown list.

About the examples

The examples in this procedure use the following switch and node nomenclature:

- The names of the two Cisco switches are s1 and s2.
- The node names are cluster1-01 and cluster1-02.

Install or upgrade the software

The procedure requires the use of both ONTAP commands and Cisco Nexus 9000 Series Switches commands; ONTAP commands are used unless otherwise indicated.

Steps

1. Connect the switch to the management network.
2. Use the `ping` command to verify connectivity to the server hosting the NX-OS software and the RCF.

   Show example

   This example verifies that the switch can reach the server at IP address 172.19.2.1:

   ```
   s2# ping 172.19.2.1 VRF management
   Pinging 172.19.2.1 with 0 bytes of data:

   Reply From 172.19.2.1: icmp_seq = 0. time= 5910 usec.
   ```

3. If you are setting up your switch for the first time, skip to step 5. If you are upgrading your switch, proceed to the next step.
4. Check the administrative or operational status of each node storage port and storage shelf port.
   a. Display the node storage port attributes:

   ```
   storage port show
   ```

Show example

```
cluster1::*> storage port show
Speed                       VLAN
Node           Port Type  Mode    (Gb/s) State    Status      ID
-------------- ---- ----- ------- ------ -------- --------- ----
cluster1-01
               e5a  ENET  storage    100 enabled  online      -
               e3b  ENET  storage    100 enabled  online      -
cluster1-02

               e5a  ENET  storage    100 enabled  online      -
               e3b  ENET  storage    100 enabled  online      -
.
.
```

b. Display the storage shelf port attributes:

```
storage shelf port show
```

Show example

```
cluster1::*> storage shelf port show

Shelf ID Module State        Internal?
----- -- ------ ------------ ---------
1.4
       0 A      connected    false
       1 A      connected    false
       2 B      connected    false
       3 B      connected    false
.
.
```

c. Verify that switch health monitoring (CSHM) is enabled for the switch so that the switches are monitored:

```
system switch ethernet show
```

Show example

```
cluster1::> system switch ethernet show
  Switch            Type               Address          Model
  ----------------- ------------------ ----------------
---------------
  s1                storage-network    1.2.3.4          N9K-
C9336C-FX2
     Serial Number: FFFXXXXXXX1
      Is Monitored: true
            Reason: None
  Software Version: Cisco Nexus Operating System (NX-OS)
Software, Version
                    10.3(4a)
    Version Source: CDP/ISDP
  s2                storage-network    2.3.4.5          N9K-
C9336C-FX2
     Serial Number: FFFXXXXXXX2
      Is Monitored: true
            Reason: None
  Software Version: Cisco Nexus Operating System (NX-OS)
Software, Version
                    10.3(4a)
    Version Source: CDP/ISDP
```

5. Log in to the switch using SSH or by using a serial console.
6. Copy the NX-OS software and EPLD images to the Nexus 9336C-FX2 switch.

Show example

```
s2# copy sftp: bootflash: vrf management
Enter source filename: /code/nxos.9.3.5.bin
Enter hostname for the sftp server: 172.19.2.1
Enter username: user1

Outbound-ReKey for 172.19.2.1:22
Inbound-ReKey for 172.19.2.1:22
user1@172.19.2.1's password:
sftp> progress
Progress meter enabled
sftp> get   /code/nxos.9.3.5.bin  /bootflash/nxos.9.3.5.bin
/code/nxos.9.3.5.bin  100% 1261MB   9.3MB/s   02:15
sftp> exit
Copy complete, now saving to disk (please wait)...
Copy complete.


s2# copy sftp: bootflash: vrf management
Enter source filename: /code/n9000-epld.9.3.5.img
Enter hostname for the sftp server: 172.19.2.1
Enter username: user1

Outbound-ReKey for 172.19.2.1:22
Inbound-ReKey for 172.19.2.1:22
user1@172.19.2.1's password:
sftp> progress
Progress meter enabled
sftp> get   /code/n9000-epld.9.3.5.img  /bootflash/n9000-
epld.9.3.5.img
/code/n9000-epld.9.3.5.img  100%  161MB   9.5MB/s   00:16
sftp> exit
Copy complete, now saving to disk (please wait)...
Copy complete.
```

7. Verify the running version of the NX-OS software:

   ```
   show version
   ```

Show example

```
s2# show version
Cisco Nexus Operating System (NX-OS) Software
TAC support: http://www.cisco.com/tac
Copyright (C) 2002-2020, Cisco and/or its affiliates.
All rights reserved.
The copyrights to certain works contained in this software are
owned by other third parties and used and distributed under their
own
licenses, such as open source.  This software is provided "as is,"
and unless
otherwise stated, there is no warranty, express or implied,
including but not
limited to warranties of merchantability and fitness for a
particular purpose.
Certain components of this software are licensed under
the GNU General Public License (GPL) version 2.0 or
GNU General Public License (GPL) version 3.0  or the GNU
Lesser General Public License (LGPL) Version 2.1 or
Lesser General Public License (LGPL) Version 2.0.
A copy of each such license is available at
http://www.opensource.org/licenses/gpl-2.0.php and
http://opensource.org/licenses/gpl-3.0.html and
http://www.opensource.org/licenses/lgpl-2.1.php and
http://www.gnu.org/licenses/old-licenses/library.txt.

Software
  BIOS: version 08.38
  NXOS: version 9.3(4)
  BIOS compile time:  05/29/2020
  NXOS image file is: bootflash:///nxos.9.3.4.bin
  NXOS compile time:  4/28/2020 21:00:00 [04/29/2020 02:28:31]


Hardware
  cisco Nexus9000 C9336C-FX2 Chassis
  Intel(R) Xeon(R) CPU E5-2403 v2 @ 1.80GHz with 8154432 kB of
memory.
  Processor Board ID FOC20291J6K

  Device name: s2
  bootflash:   53298520 kB
Kernel uptime is 0 day(s), 0 hour(s), 3 minute(s), 42 second(s)
```

```
Last reset at 157524 usecs after Mon Nov  2 18:32:06 2020
  Reason: Reset Requested by CLI command reload
  System version: 9.3(4)
  Service:

plugin
  Core Plugin, Ethernet Plugin

Active Package(s):
```

8. Install the NX-OS image.

   Installing the image file causes it to be loaded every time the switch is rebooted.

Show example

```
s2# install all nxos bootflash:nxos.9.3.5.bin

Installer will perform compatibility check first. Please wait.
Installer is forced disruptive

Verifying image bootflash:/nxos.9.3.5.bin for boot variable "nxos".
[] 100% -- SUCCESS

Verifying image type.
[] 100% -- SUCCESS

Preparing "nxos" version info using image bootflash:/nxos.9.3.5.bin.
[] 100% -- SUCCESS

Preparing "bios" version info using image bootflash:/nxos.9.3.5.bin.
[] 100% -- SUCCESS

Performing module support checks.
[] 100% -- SUCCESS

Notifying services about system upgrade.
[] 100% -- SUCCESS



Compatibility check is done:
Module  Bootable  Impact          Install-type  Reason
------  --------  --------------- ------------  ---------
  1     yes       Disruptive      Reset         Default upgrade is
not hitless



Images will be upgraded according to following table:

Module   Image    Running-Version(pri:alt)                 New-
Version         Upg-Required
------- --------- ----------------------------------------
------------------- ------------
  1      nxos     9.3(4)                                   9.3(5)
yes
  1      bios     v08.37(01/28/2020):v08.23(09/23/2015)
v08.38(05/29/2020)      yes
```

```
Switch will be reloaded for disruptive upgrade.

Do you want to continue with the installation (y/n)? [n] y

Install is in progress, please wait.

Performing runtime checks.
[] 100% -- SUCCESS

Setting boot variables.
[] 100% -- SUCCESS

Performing configuration copy.
[] 100% -- SUCCESS

Module 1: Refreshing compact flash and upgrading
bios/loader/bootrom.
Warning: please do not remove or power off the module at this time.
[] 100% -- SUCCESS

Finishing the upgrade, switch will reboot in 10 seconds.
```

9. Verify the new version of NX-OS software after the switch has rebooted:

```
show version
```

Show example

```
s2# show version

Cisco Nexus Operating System (NX-OS) Software
TAC support: http://www.cisco.com/tac
Copyright (C) 2002-2020, Cisco and/or its affiliates.
All rights reserved.
The copyrights to certain works contained in this software are
owned by other third parties and used and distributed under their
own
licenses, such as open source.  This software is provided "as is,"
and unless
otherwise stated, there is no warranty, express or implied,
including but not
limited to warranties of merchantability and fitness for a
particular purpose.
Certain components of this software are licensed under
the GNU General Public License (GPL) version 2.0 or
GNU General Public License (GPL) version 3.0  or the GNU
Lesser General Public License (LGPL) Version 2.1 or
Lesser General Public License (LGPL) Version 2.0.
A copy of each such license is available at
http://www.opensource.org/licenses/gpl-2.0.php and
http://opensource.org/licenses/gpl-3.0.html and
http://www.opensource.org/licenses/lgpl-2.1.php and
http://www.gnu.org/licenses/old-licenses/library.txt.

Software
  BIOS: version 05.33
  NXOS: version 9.3(5)
  BIOS compile time:  09/08/2018
  NXOS image file is: bootflash:///nxos.9.3.5.bin
  NXOS compile time:  11/4/2018 21:00:00 [11/05/2018 06:11:06]


Hardware
  cisco Nexus9000 C9336C-FX2 Chassis
  Intel(R) Xeon(R) CPU E5-2403 v2 @ 1.80GHz with 8154432 kB of
memory.
  Processor Board ID FOC20291J6K

  Device name: s2
  bootflash:   53298520 kB
Kernel uptime is 0 day(s), 0 hour(s), 3 minute(s), 42 second(s)
```

```
Last reset at 277524 usecs after Mon Nov  2 22:45:12 2020
  Reason: Reset due to upgrade
  System version: 9.3(4)
  Service:

plugin
  Core Plugin, Ethernet Plugin

Active Package(s):
```

10. Upgrade the EPLD image and reboot the switch.

Show example

```
s2# show version module 1 epld

EPLD Device                      Version
---------------------------------------
MI   FPGA                         0x7
IO   FPGA                         0x17
MI   FPGA2                        0x2
GEM  FPGA                         0x2
GEM  FPGA                         0x2
GEM  FPGA                         0x2
GEM  FPGA                         0x2

s2# install epld bootflash:n9000-epld.9.3.5.img module all
Compatibility check:
Module        Type         Upgradable        Impact    Reason
------  ------------------ ----------------- --------- -----------
     1         SUP         Yes       disruptive  Module Upgradable

Retrieving EPLD versions.... Please wait.
Images will be upgraded according to following table:
Module  Type   EPLD              Running-Version   New-Version  Upg-
Required
------- ------ ----------------- ----------------- ------------
------------
     1  SUP    MI FPGA           0x07              0x07         No
     1  SUP    IO FPGA           0x17              0x19         Yes
     1  SUP    MI FPGA2          0x02              0x02         No
The above modules require upgrade.
The switch will be reloaded at the end of the upgrade
Do you want to continue (y/n) ?  [n] y

Proceeding to upgrade Modules.

Starting Module 1 EPLD Upgrade

Module 1 : IO FPGA [Programming] : 100.00% (     64 of      64
sectors)
Module 1 EPLD upgrade is successful.
Module   Type  Upgrade-Result
-------- ----- --------------
     1   SUP   Success

EPLDs upgraded.

Module 1 EPLD upgrade is successful.
```

11. After the switch reboots, log in again and verify that the new version of EPLD loaded successfully.

    Show example

```
s2# show version module 1 epld

EPLD Device                      Version
---------------------------------------
MI   FPGA                         0x7
IO   FPGA                         0x19
MI   FPGA2                        0x2
GEM  FPGA                         0x2
GEM  FPGA                         0x2
GEM  FPGA                         0x2
GEM  FPGA                         0x2
```

12. If you are setting up your switch for the first time, skip to step 14. If you are upgrading your switch, proceed to the next step.
13. Verify the health status of each node storage port and storage shelf port.
    a. Display the node storage port attributes:

```
storage port show
```

    Show example

```
cluster1::*> storage port show
Speed                      VLAN
Node           Port Type  Mode    (Gb/s) State    Status      ID
-------------- ---- ----- ------- ------ -------- --------- ----
cluster1-01
               e5a  ENET  storage    100 enabled  online      -
               e3b  ENET  storage    100 enabled  online      -
cluster1-02

               e5a  ENET  storage    100 enabled  online      -
               e3b  ENET  storage    100 enabled  online      -
.
.
```

    b. Display the storage shelf port attributes:

```
storage shelf port show
```

Show example

```
cluster1::*> storage shelf port show

Shelf ID Module State        Internal?
----- -- ------ ------------ ---------
1.4
       0 A      connected    false
       1 A      connected    false
       2 B      connected    false
       3 B      connected    false
.
.
```

c. Verify that switch health monitoring (CSHM) is enabled for the switches so that they are monitored:

```
system switch ethernet show
```

Show example

```
cluster1::> system switch ethernet show
  Switch                    Type               Address          Model
  ----------------- ------------------ ----------------
---------------
  s1                        storage-network    1.2.3.4          N9K-
C9336C-FX2
     Serial Number: FFFXXXXXXX1
      Is Monitored: true
            Reason: None
  Software Version: Cisco Nexus Operating System (NX-OS)
Software, Version
                    10.3(4a)
    Version Source: CDP/ISDP
  s2                        storage-network    2.3.4.5          N9K-
C9336C-FX2
     Serial Number: FFFXXXXXXX2
      Is Monitored: true
            Reason: None
  Software Version: Cisco Nexus Operating System (NX-OS)
Software, Version
                    10.3(4a)
    Version Source: CDP/ISDP
```

14. Repeat steps 5 to 13 to install the NX-OS software on switch s1.

What's next?

After you've installed or upgraded the NX-OS software, you can install or upgrade the RCF.

Install or upgrade the RCF

Install or upgrade the Reference Configuration File (RCF) overview

You install the Reference Configuration File (RCF) after setting up the Nexus 9336C-FX2 storage switch for the first time. You upgrade your RCF version when you have an existing version of the RCF file installed on your switch.

See the Knowledge Base article How to clear configuration on a Cisco interconnect switch while retaining remote connectivity for further information when installing or upgrading your RCF.

Available RCF configuration

Storage - (Storage RCF 1.*xx*) is the available RCF configuration where all ports are configured for 100GbE NVMe storage connections.

Suggested documentation

- Cisco Ethernet Switches

  Consult the switch compatibility table for the supported ONTAP and RCF versions on the NetApp Support Site. Note that there can be command dependencies between the command syntax in the RCF and the syntax found in specific versions of NX-OS.

- Cisco Nexus 9000 Series Switches

  Refer to the appropriate software and upgrade guides available on the Cisco website for complete documentation on the Cisco switch upgrade and downgrade procedures.

About the examples

The examples in this procedure use the following switch and node nomenclature:

- The names of the two Cisco switches are s1 and s2.
- The node names are cluster1-01 and cluster1-02.

See the Hardware Universe to verify the correct ports on your platform.

> The command outputs might vary depending on different releases of ONTAP.

Commands used

The procedure requires the use of both ONTAP commands and Cisco Nexus 9000 Series Switches commands; ONTAP commands are used unless otherwise indicated.

What's next?

After you've reviewed the install RCF or upgrade RCF procedure, you can install the RCF or upgrade your RCF as needed.

Install the Reference Configuration File

You install the Reference Configuration File (RCF) after setting up the Nexus 9336C-FX2 and 9336C-FX2-T storage switches for the first time.

See the Knowledge Base article How to clear configuration on a Cisco interconnect switch while retaining remote connectivity for further information when installing your RCF.

Before you begin

Verify the following installations and connections:

- A console connection to the switch. The console connection is optional if you have remote access to the switch.
- Switch s1 and switch s2 are powered up and the initial switch setup is complete (the Management IP address and SSH is set up).
- The desired NX-OS version has been installed.
- ONTAP node storage ports and storage shelf ports are not connected.

Step 1: Install the RCF on the switches

1. Log in to switch s2 using SSH or by using a serial console.

2. Copy the RCF to the bootflash of switch s2 using one of the following transfer protocols: FTP, TFTP, SFTP, or SCP.

   For more information on Cisco commands, see the appropriate guide in the Cisco Nexus 9000 Series NX-OS Command Reference.

   Show example

   This example shows TFTP being used to copy an RCF to the bootflash on switch s2:

   ```
   s2# copy tftp: bootflash: vrf management
   Enter source filename: NX9336C-FX2-RCF-v1.13-1-Storage.txt
   Enter hostname for the tftp server: 172.22.201.50
   Trying to connect to tftp server......Connection to Server
   Established.
   TFTP get operation was successful
   Copy complete, now saving to disk (please wait)...
   ```

3. Apply the RCF previously downloaded to the bootflash.

   For more information on Cisco commands, see the appropriate guide in the Cisco Nexus 9000 Series NX-OS Command Reference.

   Show example

   This example shows the RCF `NX9336C-FX2-RCF-v1.13-1-Storage.txt` being installed on switch s2:

   ```
   s2# copy NX9336C-FX2-RCF-v1.13-1-Storage.txt running-config echo-
   commands
   ```

4. Examine the banner output from the `show banner motd` command. You must read and follow these instructions to ensure the correct configuration and operation of the switch.

Show example

```
s2# show banner motd

***********************************************************
* NetApp Reference Configuration File (RCF)
*
* Switch    : NX9336C-FX2
* Filename  : NX9336C-FX2-RCF-v1.13-1-Storage.txt
* Date      : 05-22-2025
* Version   : v1.13
*
* Port Usage : Storage configuration
* Ports  1-36: 100GbE Controller and Shelf Storage Ports
*
* IMPORTANT NOTES
*
* Interface port-channel999 is reserved to identify the version of
this file.
***********************************************************
```

5. Verify that the RCF is the correct newer version:

   `show running-config`

   When you check the output to verify you have the correct RCF, make sure that the following information is correct:

   - The RCF banner
   - The node and port settings
   - Customizations

     The output varies according to your site configuration. Check the port settings and refer to the release notes for any changes specific to the RCF that you have installed.

6. Record any custom additions between the current `running-config` file and the RCF file in use.
7. After you verify that the RCF versions and switch settings are correct, copy the `running-config` file to the `startup-config` file.

   ```
   s2# copy running-config startup-config
   [#########################################] 100% Copy complete
   ```

8. Reboot switch s2.

   `s2#` **`reload`**

```
This command will reboot the system. (y/n)? [n] y
```

9. Repeat steps 1 through 8 on switch s1.
10. Connect the node storage ports and storage shelf ports of all the nodes in the ONTAP cluster to switches s1 and s2.

Step 2: Verify the switch connections

1. Verify that the switch ports are **up**.

   ```
   show interface brief
   ```

Show example

```
s1# show interface brief | grep up
mgmt0  --           up     <mgmt ip address>
1000    1500
Eth1/11         1       eth  trunk  up      none
100G(D) --
Eth1/12         1       eth  trunk  up      none
100G(D) --
Eth1/13         1       eth  trunk  up      none
100G(D) --
Eth1/14         1       eth  trunk  up      none
100G(D) --
Eth1/15         1       eth  trunk  up      none
100G(D) --
Eth1/16         1       eth  trunk  up      none
100G(D) --
Eth1/17         1       eth  trunk  up      none
100G(D) --
Eth1/18         1       eth  trunk  up      none
100G(D) --
Eth1/23         1       eth  trunk  up      none
100G(D) --
Eth1/24         1       eth  trunk  up      none
100G(D) --
Eth1/25         1       eth  trunk  up      none
100G(D) --
Eth1/26         1       eth  trunk  up      none
100G(D) --
Eth1/27         1       eth  trunk  up      none
100G(D) --
Eth1/28         1       eth  trunk  up      none
100G(D) --
Eth1/29         1       eth  trunk  up      none
100G(D) --
Eth1/30         1       eth  trunk  up      none
100G(D) --
```

2. Verify that the node storage ports and storage shelf ports are in their correct VLANs using the following commands:

   `show vlan brief`

   `show interface trunk`

Show example

```
s1# show vlan brief

VLAN Name                             Status    Ports
---- -------------------------------- ---------
-------------------------------
1    default                          active    Po999
30   VLAN0030                         active    Eth1/1, Eth1/2,
Eth1/3, Eth1/4
                                                Eth1/5, Eth1/6,
Eth1/7, Eth1/8
                                                Eth1/9, Eth1/10,
Eth1/11
                                                Eth1/12, Eth1/13,
Eth1/14
                                                Eth1/15, Eth1/16,
Eth1/17
                                                Eth1/18, Eth1/19,
Eth1/20
                                                Eth1/21, Eth1/22,
Eth1/23
                                                Eth1/24, Eth1/25,
Eth1/26
                                                Eth1/27, Eth1/28,
Eth1/29
                                                Eth1/30, Eth1/31,
Eth1/32
                                                Eth1/33, Eth1/34,
Eth1/35
                                                Eth1/36

s1# show interface trunk

-------------------------------------------------------
Port          Native  Status        Port
              Vlan                  Channel
-------------------------------------------------------
Eth1/1        1       trunking      --
Eth1/2        1       trunking      --
Eth1/3        1       trunking      --
Eth1/4        1       trunking      --
Eth1/5        1       trunking      --
Eth1/6        1       trunking      --
Eth1/7        1       trunking      --
Eth1/8        1       trunking      --
```

```
Eth1/9        1       trunking      --
Eth1/10       1       trunking      --
Eth1/11       1       trunking      --
Eth1/12       1       trunking      --
Eth1/13       1       trunking      --
Eth1/14       1       trunking      --
Eth1/15       1       trunking      --
Eth1/16       1       trunking      --
Eth1/17       1       trunking      --
Eth1/18       1       trunking      --
Eth1/19       1       trunking      --
Eth1/20       1       trunking      --
Eth1/21       1       trunking      --
Eth1/22       1       trunking      --
Eth1/23       1       trunking      --
Eth1/24       1       trunking      --
Eth1/25       1       trunking      --
Eth1/26       1       trunking      --
Eth1/27       1       trunking      --
Eth1/28       1       trunking      --
Eth1/29       1       trunking      --
Eth1/30       1       trunking      --
Eth1/31       1       trunking      --
Eth1/32       1       trunking      --
Eth1/33       1       trunking      --
Eth1/34       1       trunking      --
Eth1/35       1       trunking      --
Eth1/36       1       trunking      --

----------------------------------------------------------------------
------------
Port          Vlans Allowed on Trunk
----------------------------------------------------------------------
------------
Eth1/1        30
Eth1/2        30
Eth1/3        30
Eth1/4        30
Eth1/5        30
Eth1/6        30
Eth1/7        30
Eth1/8        30
Eth1/9        30
Eth1/10       30
Eth1/11       30
Eth1/12       30
```

```
Eth1/13       30
Eth1/14       30
Eth1/15       30
Eth1/16       30
Eth1/17       30
Eth1/18       30
Eth1/19       30
Eth1/20       30
Eth1/21       30
Eth1/22       30
Eth1/23       30
Eth1/24       30
Eth1/25       30
Eth1/26       30
Eth1/27       30
Eth1/28       30
Eth1/29       30
Eth1/30       30
Eth1/31       30
Eth1/32       30
Eth1/33       30
Eth1/34       30
Eth1/35       30
Eth1/36       30

--------------------------------------------------------------------
------------
Port          Vlans Err-disabled on Trunk
--------------------------------------------------------------------
------------
Eth1/1        none
Eth1/2        none
Eth1/3        none
Eth1/4        none
Eth1/5        none
Eth1/6        none
Eth1/7        none
Eth1/8        none
Eth1/9        none
Eth1/10       none
Eth1/11       none
Eth1/12       none
Eth1/13       none
Eth1/14       none
Eth1/15       none
Eth1/16       none
```

```
Eth1/17       none
Eth1/18       none
Eth1/19       none
Eth1/20       none
Eth1/21       none
Eth1/22       none
Eth1/23       none
Eth1/24       none
Eth1/25       none
Eth1/26       none
Eth1/27       none
Eth1/28       none
Eth1/29       none
Eth1/30       none
Eth1/31       none
Eth1/32       none
Eth1/33       none
Eth1/34       none
Eth1/35       none
Eth1/36       none

--------------------------------------------------------------------
------------
Port          STP Forwarding
--------------------------------------------------------------------
------------
Eth1/1        none
Eth1/2        none
Eth1/3        none
Eth1/4        none
Eth1/5        none
Eth1/6        none
Eth1/7        none
Eth1/8        none
Eth1/9        none
Eth1/10       none
Eth1/11       30
Eth1/12       30
Eth1/13       30
Eth1/14       30
Eth1/15       30
Eth1/16       30
Eth1/17       30
Eth1/18       30
Eth1/19       none
Eth1/20       none
```

```
Eth1/21       none
Eth1/22       none
Eth1/23       30
Eth1/24       30
Eth1/25       30
Eth1/26       30
Eth1/27       30
Eth1/28       30
Eth1/29       30
Eth1/30       30
Eth1/31       none
Eth1/32       none
Eth1/33       none
Eth1/34       none
Eth1/35       none
Eth1/36       none

----------------------------------------------------------------------
------------
Port          Vlans in spanning tree forwarding state and not pruned
----------------------------------------------------------------------
------------
Eth1/1        Feature VTP is not enabled
none
Eth1/2        Feature VTP is not enabled
none
Eth1/3        Feature VTP is not enabled
none
Eth1/4        Feature VTP is not enabled
none
Eth1/5        Feature VTP is not enabled
none
Eth1/6        Feature VTP is not enabled
none
Eth1/7        Feature VTP is not enabled
none
Eth1/8        Feature VTP is not enabled
none
Eth1/9        Feature VTP is not enabled
none
Eth1/10       Feature VTP is not enabled
none
Eth1/11       Feature VTP is not enabled
30
Eth1/12       Feature VTP is not enabled
30
```

```
Eth1/13       Feature VTP is not enabled
30
Eth1/14       Feature VTP is not enabled
30
Eth1/15       Feature VTP is not enabled
30
Eth1/16       Feature VTP is not enabled
30
Eth1/17       Feature VTP is not enabled
30
Eth1/18       Feature VTP is not enabled
30
Eth1/19       Feature VTP is not enabled
none
Eth1/20       Feature VTP is not enabled
none
Eth1/21       Feature VTP is not enabled
none
Eth1/22       Feature VTP is not enabled
none
Eth1/23       Feature VTP is not enabled
30
Eth1/24       Feature VTP is not enabled
30
Eth1/25       Feature VTP is not enabled
30
Eth1/26       Feature VTP is not enabled
30
Eth1/27       Feature VTP is not enabled
30
Eth1/28       Feature VTP is not enabled
30
Eth1/29       Feature VTP is not enabled
30
Eth1/30       Feature VTP is not enabled
30
Eth1/31       Feature VTP is not enabled
none
Eth1/32       Feature VTP is not enabled
none
Eth1/33       Feature VTP is not enabled
none
Eth1/34       Feature VTP is not enabled
none
Eth1/35       Feature VTP is not enabled
none
```

```
Eth1/36       Feature VTP is not enabled
none
```

For specific port and VLAN usage details, refer to the banner and important notes section in your RCF.

Step 3: Set up your ONTAP cluster

NetApp recommends that you use System Manager to set up new clusters.

System Manager provides a simple and easy workflow for cluster setup and configuration including assigning a node management IP address, initializing the cluster, creating a local tier, configuring protocols and provisioning initial storage.

Go to Configure ONTAP on a new cluster with System Manager for setup instructions.

What's next?

After you've installed your RCF, you can verify the SSH configuration

Upgrade your Reference Configuration File (RCF)

You upgrade your RCF version when you have an existing version of the RCF file installed on your operational switches.

Before you begin

Make sure you have the following:

- A current backup of the switch configuration.
- A fully functioning cluster (no errors in the logs or similar issues).
- The current RCF.
- If you are updating your RCF version, you need a boot configuration in the RCF that reflects the desired boot images.

  If you need to change the boot configuration to reflect the current boot images, you must do so before reapplying the RCF so that the correct version is instantiated on future reboots.

Before installing a new switch software version and RCFs, you must erase the switch settings and perform basic configuration. You must be connected to the switch using the serial console or have preserved basic configuration information before erasing the switch settings.

Step 1: Prepare for the upgrade

1. If AutoSupport is enabled on this cluster, suppress automatic case creation by invoking an AutoSupport message:

   ```
   system node autosupport invoke -node * -type all -message MAINT=xh
   ```

   Where *x* is the duration of the maintenance window in hours.

2. Change the privilege level to advanced, entering **y** when prompted to continue:

   ```
   set -privilege advanced
   ```

   The advanced prompt (*>) appears.

3. Display the ports on each node that are connected to the switches:

   ```
   network device-discovery show
   ```

   Show example

   ```
   cluster1::*> network device-discovery show
   Node/       Local  Discovered
   Protocol    Port   Device (LLDP: ChassisID) Interface       Platform
   ----------- ------ ------------------------ ---------------
   ---------
   cluster1-01/cdp
               e5a    s1                       Ethernet1/7     N9K-
   C9336C
               e3b    s2                       Ethernet1/7     N9K-
   C9336C
   cluster1-02/cdp
               e5a    s1                       Ethernet1/8     N9K-
   C9336C
               e3b    s2                       Ethernet1/8     N9K-
   C9336C
   .
   .
   .
   ```

4. Check the administrative or operational status of each node storage port and storage shelf port.
   a. Verify that all the node storage ports are up with a healthy status:

      ```
      storage port show -port-type ENET
      ```

Show example

```
cluster1::*> storage port show -port-type ENET


                                          Speed
Node                Port Type  Mode    (Gb/s) State    Status
------------------ ---- ----- ------- ------ -------- -----------
cluster1-01
                    e5a ENET  -         100   enabled  online
                    e3b ENET  -         100   enabled  online
cluster1-02
                    e5a ENET  -         100   enabled  online
                    e3b ENET  -         100   enabled  online
.
.
```

b. Verify that all the storage shelf ports are up with a healthy status:

```
storage shelf port show
```

Show example

```
cluster1::> storage shelf port show

Shelf ID Module State        Internal?
----- -- ------ ------------ ---------
1.4
       0 A      connected    false
       1 A      connected    false
       2 B      connected    false
       3 B      connected    false
.
.
```

c. Verify that the switches are being monitored.

```
system switch ethernet show
```

Show example

```
cluster1::*> system switch ethernet show
  Switch                    Type               Address          Model
  ----------------- ------------------ ----------------
---------------
  s1                        storage-network    1.2.3.4          N9K-
C9336C-FX2
     Serial Number: FFFXXXXXXX1
      Is Monitored: true
            Reason: None
  Software Version: Cisco Nexus Operating System (NX-OS)
Software, Version
                    10.3(4a)
    Version Source: CDP/ISDP
  s2                        storage-network    2.3.4.5          N9K-
C9336C-FX2
     Serial Number: FEEXXXXXXX2
      Is Monitored: true
            Reason: None
  Software Version: Cisco Nexus Operating System (NX-OS)
Software, Version
                    10.3(4a)
    Version Source: CDP/ISDP
```

Step 2: Upgrade the RCF

1. Log in to the switch s2 using SSH or by using a serial console.
2. Shut down the ports connected to all the ports of the nodes.

```
s2> enable
s2# configure
s2(config)# interface e1/1-36
s2(config-if-range)# shutdown
s2(config-if-range)# exit
s2(config)# exit
```

> Make sure to shutdown **all** connected ports to avoid any network connection issues. See the Knowledge Base article Node out of quorum when migrating cluster LIF during switch OS upgrade for further details.

3. If you have not already done so, save a copy of the current switch configuration by copying the output of the following command to a text file:

```
show running-config
```

a. Record any custom additions between the current `running-config` and the RCF file in use (such as an SNMP configuration for your organization).

b. For NX-OS 10.2 and later, use the `show diff running-config` command to compare with the saved RCF file in the bootflash. Otherwise, use a third-party diff or compare tool.

4. Save basic configuration details to the `write_erase.cfg` file on the bootflash.

> Make sure to configure the following:
>
> - Username and password
> - Management IP address
> - Default gateway
> - Switch name

```
s2# show run | i "username admin password" > bootflash:write_erase.cfg

s2# show run | section "vrf context management" >> bootflash:write_erase.cfg

s2# show run | section "interface mgmt0" >> bootflash:write_erase.cfg

s2# show run | section "switchname" >> bootflash:write_erase.cfg
```

See the Knowledge Base article How to clear configuration on a Cisco interconnect switch while retaining remote connectivity for further details.

5. Verify that the `write_erase.cfg` file is populated as expected:

```
show file bootflash:write_erase.cfg
```

6. Issue the `write erase` command to erase the current saved configuration:

```
s2# write erase

Warning: This command will erase the startup-configuration.

Do you wish to proceed anyway? (y/n) [n] y
```

7. Copy the previously saved basic configuration into the startup configuration.

```
s2# copy bootflash:write_erase.cfg startup-config
```

8. Reboot the switch:

```
s2# reload

This command will reboot the system. (y/n)? [n] y
```

9. After the management IP address is reachable again, log in to the switch through SSH.

   You might need to update host file entries related to the SSH keys.

10. Copy the RCF to the bootflash of switch s2 using one of the following transfer protocols: FTP, TFTP, SFTP, or SCP.

    For more information on Cisco commands, see the appropriate guide in the Cisco Nexus 9000 Series NX-OS Command Reference guides.

    Show example

    This example shows TFTP being used to copy an RCF to the bootflash on switch s2:

    ```
    s2# copy tftp: bootflash: vrf management
    Enter source filename: NX9336C-FX2-RCF-v1.13-1-Storage.txt
    Enter hostname for the tftp server: 172.22.201.50
    Trying to connect to tftp server......Connection to Server
    Established.
    TFTP get operation was successful
    Copy complete, now saving to disk (please wait)...
    ```

11. Apply the RCF previously downloaded to the bootflash.

    For more information on Cisco commands, see the appropriate guide in the Cisco Nexus 9000 Series NX-OS Command Reference guides.

    This example shows the RCF file `NX9336C-FX2-RCF-v1.13-1-Storage.txt` being installed on switch s2:

    ```
    s2# copy NX9336C-FX2-RCF-v1.13-1-Storage.txt running-config echo-
    commands
    ```

    Make sure to thoroughly read the **Installation notes**, **Important Notes**, and **banner** sections of your RCF. You must read and follow these instructions to ensure the proper configuration and operation of the switch.

12. Verify that the RCF file is the correct newer version:

    ```
    show running-config
    ```

    When you check the output to verify you have the correct RCF, make sure that the following information is correct:

    - The RCF banner
    - The node and port settings
    - Customizations

      The output varies according to your site configuration. Check the port settings and refer to the release notes for any changes specific to the RCF that you have installed.

13. Reapply any previous customizations to the switch configuration.
14. After you verify the RCF versions, custom additions, and switch settings are correct, copy the `running-config` file to the `startup-config` file.

    For more information on Cisco commands, see the appropriate guide in the Cisco Nexus 9000 Series NX-OS Command Reference guides.

    ```
    s2# copy running-config startup-config

    [] 100% Copy complete
    ```

15. Reboot switch s2. You can ignore the “cluster switch health monitor” alerts and “cluster ports down” events reported on the nodes while the switch reboots.

    ```
    s2# reload

    This command will reboot the system. (y/n)? [n] y
    ```

16. Check the administrative or operational status of each node storage port and storage shelf port.
    a. Verify that all the storage ports are up with a healthy status:

    ```
    storage port show -port-type ENET
    ```

    Show example

    ```
    cluster1::*> storage port show -port-type ENET


                                          Speed
    Node                Port Type  Mode    (Gb/s) State    Status
    ------------------ ---- ----- ------- ------ -------- -----------
    cluster1-01
                        e5a  ENET  -          100 enabled  online
                        e3b  ENET  -          100 enabled  online
    cluster1-02
                        e5a  ENET  -          100 enabled  online
                        e3b  ENET  -          100 enabled  online
    .
    .
    ```

    b. Verify that all the storage shelf ports are up with a healthy status:

    ```
    storage shelf port show
    ```

Show example

```
cluster1::> storage shelf port show

Shelf ID Module State        Internal?
----- -- ------ ------------ ---------
1.4
       0 A      connected    false
       1 A      connected    false
       2 B      connected    false
       3 B      connected    false
.
.
```

c. Verify that the switches are being monitored:

```
system switch ethernet show
```

Show example

```
cluster1::> system switch ethernet show
  Switch           Type               Address          Model
  ---------------- ------------------ ----------------
---------------
  s1               storage-network    1.2.3.4          N9K-
C9336C-FX2
     Serial Number: FFFXXXXXXX1
      Is Monitored: true
            Reason: None
  Software Version: Cisco Nexus Operating System (NX-OS)
Software, Version
                     10.3(4a)
    Version Source: CDP/ISDP
  s2               storage-network    2.3.4.5          N9K-
C9336C-FX2
     Serial Number: FEEXXXXXXX2
      Is Monitored: true
            Reason: None
  Software Version: Cisco Nexus Operating System (NX-OS)
Software, Version
                     10.3(4a)
    Version Source: CDP/ISDP
```

17. Repeat steps 1 to 16 on switch s1.

Step 3: Verify the storage network

Complete the following steps on each storage switch to verify that the storage network is functioning properly after the RCF upgrade.

1. Verify that the switch ports connected to the node storage ports and storage shelf ports are **up**.

```
show interface brief
```

2. Verify that the expected node storage ports are still connected:

```
show cdp neighbors
```

3. Verify that the expected storage shelf ports are still connected:

```
show lldp neighbors
```

4. Verify that the node storage ports and storage shelf ports are in their correct VLANs using the following commands:

```
show vlan brief
```

```
show interface trunk
```

What's next?

After you've upgraded your RCF, you can verify the SSH configuration.

Verify your SSH configuration

If you are using the Ethernet Switch Health Monitor (CSHM) and log collection features, verify that SSH and SSH keys are enabled on the switches.

Steps

1. Verify that SSH is enabled:

```
(switch) show ssh server
ssh version 2 is enabled
```

2. Verify that the SSH keys are enabled:

```
show ssh key
```

Show example

```
(switch)# show ssh key

rsa Keys generated:Fri Jun 28 02:16:00 2024

ssh-rsa
AAAAB3NzaC1yc2EAAAADAQABAAAAgQDiNrD52Q586wTGJjFAbjBlFaA23EpDrZ2sDCew
l7nwlioC6HBejxluIObAH8hrW8kR+gj0ZAfPpNeLGTg3APj/yiPTBoIZZxbWRShywAM5
PqyxWwRb7kp9Zt1YHzVuHYpSO82KUDowKrL6lox/YtpKoZUDZjrZjAp8hTv3JZsPgQ==

bitcount:1024
fingerprint:
SHA256:aHwhpzo7+YCDSrp3isJv2uVGz+mjMMokqdMeXVVXfdo

could not retrieve dsa key information

ecdsa Keys generated:Fri Jun 28 02:30:56 2024

ecdsa-sha2-nistp521
AAAAE2VjZHNhLXNoYTItbmlzdHA1MjEAAAAIbmlzdHA1MjEAAACFBABJ+ZX5SFKhS57e
vkE273e0VoqZi4/32dt+f14fBuKv80MjMsmLfjKtCWy1wgVt1Zi+C5TIBbugpzez529z
kFSF0ADb8JaGCoaAYe2HvWR/f6QLbKbqVIewCdqWgxzrIY5BPP5GBdxQJMBiOwEdnHg1
u/9Pzh/Vz9cHDcCW9qGE780QHA==

bitcount:521
fingerprint:
SHA256:TFGe2hXn6QIpcs/vyHzftHJ7Dceg0vQaULYRAlZeHwQ

(switch)# show feature | include scpServer
scpServer              1          enabled
(switch)# show feature | include ssh
sshServer              1          enabled
(switch)#
```

When enabling FIPS, you must change the bitcount to 256 on the switch using the command `ssh key ecdsa 256 force`. See Configure network security using FIPS for more details.

What's next?

After you've verified your SSH configuration, you configure switch health monitoring.

Reset the 9336C-FX2 and 9336C-FX2-T storage switches to factory defaults

To reset the 9336C-FX2 and 9336C-FX2-T storage switches to factory defaults, you must erase the 9336C-FX2 and 9336C-FX2-T switch settings.

About this task

- You must be connected to the switch using the serial console.
- This task resets the configuration of the management network.

Steps

1. Erase the existing configuration:

   ```
   write erase
   ```

   ```
   (s2)# write erase

   Warning: This command will erase the startup-configuration.
   Do you wish to proceed anyway? (y/n) [n] y
   ```

2. Reload the switch software:

   ```
   reload
   ```

   ```
   (s2)# reload

   This command will reboot the system. (y/n)? [n] y
   ```

   The system reboots and enters the configuration wizard. During the boot, if you receive the prompt “Abort Auto Provisioning and continue with normal setup? (yes/no)[n]”, you should respond **yes** to proceed.

What’s next

After you’ve reset your switches, you can reconfigure them as needed.

Replace Cisco Nexus 9336C-FX2 and 9336C-FX2-T storage switches

You can replace defective Nexus 9336C-FX2 and 9336C-FX2-T switches in a cluster network. This is a nondisruptive procedure.

Before you begin

Before installing the NX-OS software and RCFs on Cisco Nexus 9336C-FX2 and 9336C-FX2-T storage switches, ensure that:

- Your system can support Cisco Nexus 9336C-FX2 and 9336C-FX2-T storage switches.
- You have consulted the switch compatibility table on the Cisco Ethernet Switch page for the supported ONTAP, NX-OS, and RCF versions.

- You have referred to the appropriate software and upgrade guides available on the Cisco web site.
- You have downloaded the applicable RCFs.
- The existing network configuration has the following characteristics:
  - The Cisco Ethernet Switches page has the latest RCF and NX-OS versions on your switches.
  - Management connectivity must exist on both switches.
- The replacement Cisco Nexus 9336C-FX2 switch has the following characteristics:
  - Management network connectivity is functional.
  - Console access to the replacement switch is in place.
  - The appropriate RCF and NX-OS operating system image is loaded onto the switch.
  - Initial configuration of the switch is complete.

About this task

This procedure replaces the second Nexus 9336C-FX2 storage switch s2 with the new 9336C-FX switch ns2. The two nodes are cluster1-01 and cluster1-02.

Steps to complete:

- Confirm the switch to be replaced is s2.
- Disconnect the cables from switch s2.
- Reconnect the cables to switch ns2.
- Verify all device configurations on switch ns2.

> There can be dependencies between command syntax in the RCF and NX-OS versions.

Steps

1. If AutoSupport is enabled on this cluster, suppress automatic case creation by invoking an AutoSupport message:

   ```
   system node autosupport invoke -node * -type all -message MAINT=xh
   ```

   x is the duration of the maintenance window in hours.

2. Check on the health status of the storage node ports to make sure that there is connection to storage switch s1:

   ```
   storage port show -port-type ENET
   ```

Show example

```
storage::*> storage port show -port-type ENET
                                    Speed                      VLAN
Node           Port Type  Mode    (Gb/s) State    Status      ID
-------------- ---- ----- ------- ------ -------- --------- ----
cluster1-01
               e5a  ENET  storage 100    enabled  online      30
               e3b  ENET  storage   0    enabled  offline     30
cluster1-02
               e5a  ENET  storage 100    enabled  online      30
               e3b  ENET  storage   0    enabled  offline     30
.
.
```

3. Verify that storage switch s1 is available:

   `network device-discovery show`

   Show example

```
storage::*> network device-discovery show
Node/      Local Discovered
Protocol   Port  Device (LLDP: ChassisID)  Interface  Platform
--------   ----  -----------------------   ---------   ---------
cluster1-01/cdp
           e5a   s1                        Ethernet1/1 NX9336C
           e4a   cluster1-02               e4a         AFF-A700
           e4e   cluster1-02               e4e         AFF-A700
cluster1-01/lldp
           e5a   s1                        Ethernet1/1 -
           e4a   cluster1-02               e4a         -
           e4e   cluster1-02               e4e         -
cluster1-02/cdp
           e3b   s1                        Ethernet1/2 NX9336C
           e4a   cluster1-01               e4a         AFF-A700
           e4e   cluster1-01               e4e         AFF-A700
cluster1-02/lldp
           e3b   s1                        Ethernet1/2 -
           e4a   cluster1-01               e4a         -
           e4e   cluster1-01               e4e         -
.
.
```

4. Run the show `lldp neighbors` command on the working switch to confirm that you can see both nodes and all shelves:

   `show lldp neighbors`

   Show example

   ```
   S1# show lldp neighbors
   Capability codes:
      (R) Router, (B) Bridge, (T) Telephone, (C) DOCSIS Cable Device
      (W) WLAN Access Point, (P) Repeater, (S) Station, (O) Other
   Device ID        Local Intf   Hold-time    Capability    Port ID
   cluster1-01      Eth1/1       121          S             e5a
   cluster1-02      Eth1/2       121          S             e5a
   SHFGD2008000011  Eth1/5       121          S             e0a
   SHFGD2008000011  Eth1/6       120          S             e0a
   SHFGD2008000022  Eth1/7       120          S             e0a
   SHFGD2008000022  Eth1/8       120          S             e0a
   ```

5. Verify the storage shelf ports in the storage system:

   `storage shelf port show -fields remote-device,remote-port`

   Show example

   ```
   storage::*> storage shelf port show -fields remote-device,remote-
   port
   shelf   id  remote-port   remote-device
   -----   --  -----------   -------------
   3.20    0   Ethernet1/5   s1
   3.20    1   -             -
   3.20    2   Ethernet1/6   s1
   3.20    3   -             -
   3.30    0   Ethernet1/7   s1
   3.20    1   -             -
   3.30    2   Ethernet1/8   s1
   3.20    3   -             -
   .
   .
   ```

6. Remove all cables attached to storage switch s2.
7. Reconnect all cables to the replacement switch ns2.
8. Recheck the health status of the storage node ports:

```
storage port show -port-type ENET
```

Show example

```
storage::*> storage port show -port-type ENET
                                     Speed                      VLAN
Node             Port Type  Mode    (Gb/s) State    Status      ID
---------------- ---- ----- ------- ------ -------- --------- ----
cluster1-01
                 e5a  ENET  storage 100    enabled  online      30
                 e3b  ENET  storage   0    enabled  offline     30
                 e7a  ENET  storage   0    enabled  offline     30
                 e7b  ENET  storage   0    enabled  offline     30
cluster1-02
                 e5a  ENET  storage 100    enabled  online      30
                 e3b  ENET  storage   0    enabled  offline     30
                 e7a  ENET  storage   0    enabled  offline     30
                 e7b  ENET  storage   0    enabled  offline     30
.
.
```

9. Verify that both switches are available:

```
network device-discovery show
```

Show example

```
storage::*> network device-discovery show
Node/     Local Discovered
Protocol  Port  Device (LLDP: ChassisID)  Interface   Platform
--------  ----  -----------------------   ---------   ---------
cluster1-01/cdp
          e3a  s1                         Ethernet1/1 NX9336C
          e4a  cluster1-02                e4a         AFF-A700
          e4e  cluster1-02                e4e         AFF-A700
          e7b  ns2                       Ethernet1/1 NX9336C
cluster1-01/lldp
          e3a  s1                         Ethernet1/1 -
          e4a  cluster1-02                e4a         -
          e4e  cluster1-02                e4e         -
          e7b  ns2                        Ethernet1/1 -
cluster1-02/cdp
          e3a  s1                         Ethernet1/2 NX9336C
          e4a  cluster1-01                e4a         AFF-A700
          e4e  cluster1-01                e4e         AFF-A700
          e7b  ns2                        Ethernet1/2 NX9336C
cluster1-02/lldp
          e3a  s1                         Ethernet1/2 -
          e4a  cluster1-01                e4a         -
          e4e  cluster1-01                e4e         -
          e7b  ns2                        Ethernet1/2 -
.
.
```

10. Verify the shelf ports in the storage system:

    ```
    storage shelf port show -fields remote-device,remote-port
    ```

Show example

```
storage::*> storage shelf port show -fields remote-device,remote-
port
shelf   id    remote-port     remote-device
-----   --    -----------     -------------
3.20    0     Ethernet1/5     s1
3.20    1     Ethernet1/5     ns2
3.20    2     Ethernet1/6     s1
3.20    3     Ethernet1/6     ns2
3.30    0     Ethernet1/7     s1
3.20    1     Ethernet1/7     ns2
3.30    2     Ethernet1/8     s1
3.20    3     Ethernet1/8     ns2
storage::*>
```

11. If you suppressed automatic case creation, re-enable it by invoking an AutoSupport message:

    ```
    system node autosupport invoke -node * -type all -message MAINT=END
    ```

What's next?

After you've replaced your switches, you can configure switch health monitoring.

Copyright information

Copyright © 2026 NetApp, Inc. All Rights Reserved. Printed in the U.S. No part of this document covered by copyright may be reproduced in any form or by any means—graphic, electronic, or mechanical, including photocopying, recording, taping, or storage in an electronic retrieval system—without prior written permission of the copyright owner.

Software derived from copyrighted NetApp material is subject to the following license and disclaimer:

THIS SOFTWARE IS PROVIDED BY NETAPP “AS IS” AND WITHOUT ANY EXPRESS OR IMPLIED WARRANTIES, INCLUDING, BUT NOT LIMITED TO, THE IMPLIED WARRANTIES OF MERCHANTABILITY AND FITNESS FOR A PARTICULAR PURPOSE, WHICH ARE HEREBY DISCLAIMED. IN NO EVENT SHALL NETAPP BE LIABLE FOR ANY DIRECT, INDIRECT, INCIDENTAL, SPECIAL, EXEMPLARY, OR CONSEQUENTIAL DAMAGES (INCLUDING, BUT NOT LIMITED TO, PROCUREMENT OF SUBSTITUTE GOODS OR SERVICES; LOSS OF USE, DATA, OR PROFITS; OR BUSINESS INTERRUPTION) HOWEVER CAUSED AND ON ANY THEORY OF LIABILITY, WHETHER IN CONTRACT, STRICT LIABILITY, OR TORT (INCLUDING NEGLIGENCE OR OTHERWISE) ARISING IN ANY WAY OUT OF THE USE OF THIS SOFTWARE, EVEN IF ADVISED OF THE POSSIBILITY OF SUCH DAMAGE.

NetApp reserves the right to change any products described herein at any time, and without notice. NetApp assumes no responsibility or liability arising from the use of products described herein, except as expressly agreed to in writing by NetApp. The use or purchase of this product does not convey a license under any patent rights, trademark rights, or any other intellectual property rights of NetApp.

The product described in this manual may be protected by one or more U.S. patents, foreign patents, or pending applications.

LIMITED RIGHTS LEGEND: Use, duplication, or disclosure by the government is subject to restrictions as set forth in subparagraph (b)(3) of the Rights in Technical Data -Noncommercial Items at DFARS 252.227-7013 (FEB 2014) and FAR 52.227-19 (DEC 2007).

Data contained herein pertains to a commercial product and/or commercial service (as defined in FAR 2.101) and is proprietary to NetApp, Inc. All NetApp technical data and computer software provided under this Agreement is commercial in nature and developed solely at private expense. The U.S. Government has a non-exclusive, non-transferrable, nonsublicensable, worldwide, limited irrevocable license to use the Data only in connection with and in support of the U.S. Government contract under which the Data was delivered. Except as provided herein, the Data may not be used, disclosed, reproduced, modified, performed, or displayed without the prior written approval of NetApp, Inc. United States Government license rights for the Department of Defense are limited to those rights identified in DFARS clause 252.227-7015(b) (FEB 2014).

Trademark information

NETAPP, the NETAPP logo, and the marks listed at http://www.netapp.com/TM are trademarks of NetApp, Inc. Other company and product names may be trademarks of their respective owners.