Cisco Nexus 9336C-FX2

Cluster and storage switches

NetApp
April 25, 2024

Table of Contents

Cisco Nexus 9336C-FX2

Overview

Overview of installation and configuration for Cisco Nexus 9336C-FX2 shared switches

The Cisco Nexus 9336C-FX2 shared switch is part of the Cisco Nexus 9000 platform and can be installed in a NetApp system cabinet. Shared switches allow you to combine cluster and storage functionality into a shared switch configuration, by supporting the use of shared cluster and storage Reference Configuration Files.

Initial configuration overview

To initially configure a Cisco Nexus 9336C-FX2 switch on systems running ONTAP, follow these steps:

1. Complete cabling worksheet.

   Use the cabling images to complete the cabling between the controllers and the switches.

2. Install the switch.
3. Configure the switch.
4. Install switch in NetApp cabinet.

   Depending on your configuration, you can install the Cisco Nexus 9336C-FX2 switch and pass-through panel in a NetApp cabinet with the standard brackets that are included with the switch.

5. Prepare to install NX-OS and RCF.
6. Install the NX-OS software.
7. Install the RCF config file.

   Install the RCF after setting up the Nexus 9336C-FX2 switch for the first time. You can also use this procedure to upgrade your RCF version.

Additional information

Before you begin installation or maintenance, be sure to review the following:

- Configuration requirements
- Components and part numbers
- Required documentation

Configuration requirements for Cisco Nexus 9336C-FX2 shared switches

For Cisco Nexus 9336C-FX2 switch installation and maintenance, be sure to review configuration and network requirements.

ONTAP support

From ONTAP 9.9.1, you can use Cisco Nexus 9336C-FX2 switches to combine storage and cluster functionality into a shared switch configuration.

If you want to build ONTAP clusters with more than two nodes, you need two supported network switches.

Configuration requirements

For configuration, you need the appropriate number and type of cables and cable connectors for your switches.

Depending on the type of switch you are initially configuring, you need to connect to the switch console port with the included console cable; you also need to provide specific network information.

Network requirements

You need the following network information for all switch configurations.

- IP subnet for management network traffic
- Host names and IP addresses for each of the storage system controllers and all applicable switches
- Most storage system controllers are managed through the e0M interface by connecting to the Ethernet service port (wrench icon). On AFF A800 and AFF A700s systems, the e0M interface uses a dedicated Ethernet port.
- Refer to the Hardware Universe for the latest information.

For more information about the initial configuration of your switch, see the following guide: Cisco Nexus 9336C-FX2 Installation and Upgrade Guide.

Components and part numbers for Cisco Nexus 9336C-FX2 shared switches

For Cisco Nexus 9336C-FX2 switch installation and maintenance, be sure to review the list of components and part numbers.

The following table lists the part number and description for the 9336C-FX2 switch, fans, and power supplies:

Part number	Description
X190200-CS-PE	N9K-9336C-FX2, CS, PTSX, 36PT10/25/40/100GQSFP28
X190200-CS-PI	N9K-9336C-FX2, CS, PSIN, 36PT10/25/40/100GQSFP28
X190002	Accessory Kit X190001/X190003
X-NXA-PAC-1100W-PE2	N9K-9336C AC 1100W PSU - Port side exhaust airflow
X-NXA-PAC-1100W-PI2	N9K-9336C AC 1100W PSU - Port side Intake airflow
X-NXA-FAN-65CFM-PE	N9K-9336C 65CFM, Port side exhaust airflow
X-NXA-FAN-65CFM-PI	N9K-9336C 65CFM, Port side intake airflow

Documentation requirements for Cisco Nexus 9336C-FX2 shared switches

For Cisco Nexus 9336C-FX2 switch installation and maintenance, be sure to review specific switch and controller documentation to set up your Cisco 9336-FX2 switches and ONTAP cluster.

To set up the Cisco Nexus 9336C-FX2 shared switches, see the Cisco Nexus 9000 Series Switches Support page.

Document title	Description
Nexus 9000 Series Hardware Installation Guide	Provides detailed information about site requirements, switch hardware details, and installation options.
Cisco Nexus 9000 Series Switch Software Configuration Guides (choose the guide for the NX-OS release installed on your switches)	Provides initial switch configuration information that you need before you can configure the switch for ONTAP operation.
Cisco Nexus 9000 Series NX-OS Software Upgrade and Downgrade Guide (choose the guide for the NX-OS release installed on your switches)	Provides information on how to downgrade the switch to ONTAP supported switch software, if necessary.
Cisco Nexus 9000 Series NX-OS Command Reference Master Index	Provides links to the various command references provided by Cisco.
Cisco Nexus 9000 MIBs Reference	Describes the Management Information Base (MIB) files for the Nexus 9000 switches.
Nexus 9000 Series NX-OS System Message Reference	Describes the system messages for Cisco Nexus 9000 series switches, those that are informational, and others that might help diagnose problems with links, internal hardware, or the system software.
Cisco Nexus 9000 Series NX-OS Release Notes (choose the notes for the NX-OS release installed on your switches)	Describes the features, bugs, and limitations for the Cisco Nexus 9000 Series.
Regulatory Compliance and Safety Information for Cisco Nexus 9000 Series	Provides international agency compliance, safety, and statutory information for the Nexus 9000 series switches.

Install hardware

Complete the Cisco Nexus 9336C-FX2 cabling worksheet

Use the following cabling images to complete the cabling between the controllers and the switches.

Cable NS224 storage as switch-attached

If you want to cable NS224 storage as switch-attached, follow the switch-attached diagram:

Switch Attached

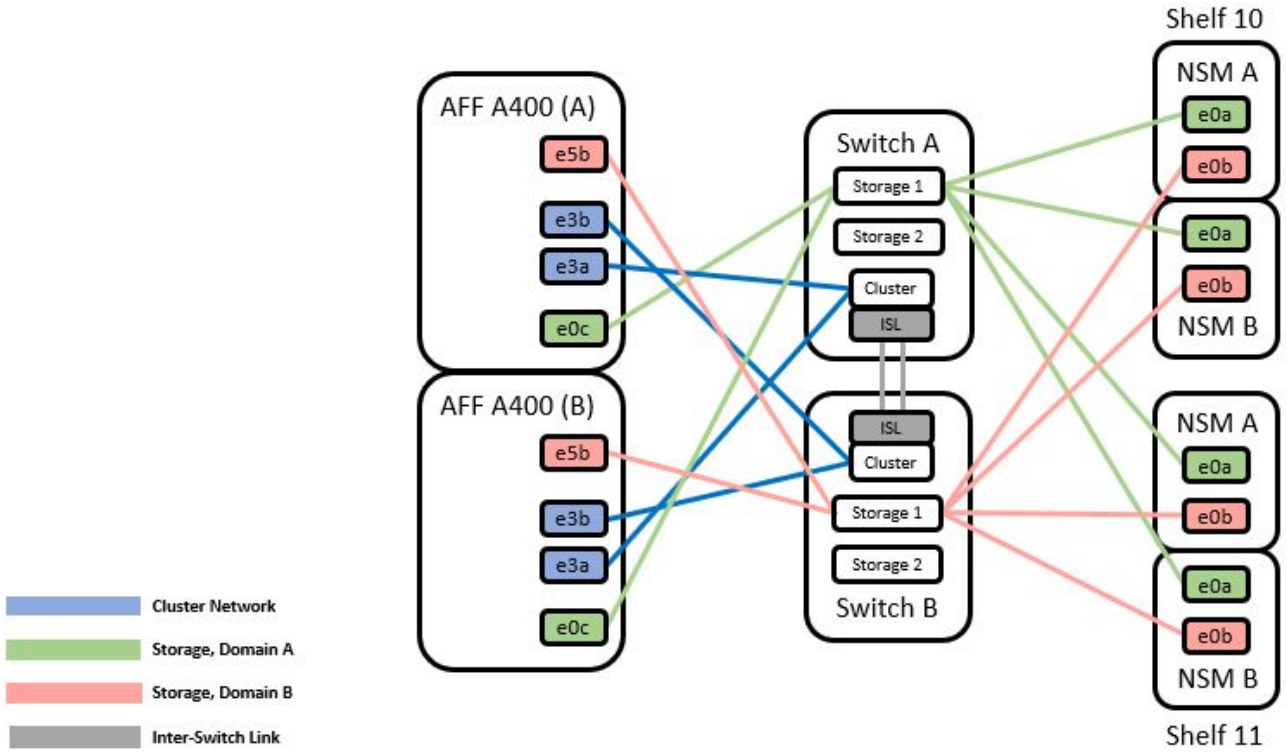

See the Hardware Universe for more information on switch ports.

Cable NS224 storage as direct-attached

If you want to cable NS224 storage as direct-attached instead of using the shared switch storage ports, follow the direct-attached diagram:

Direct Attached

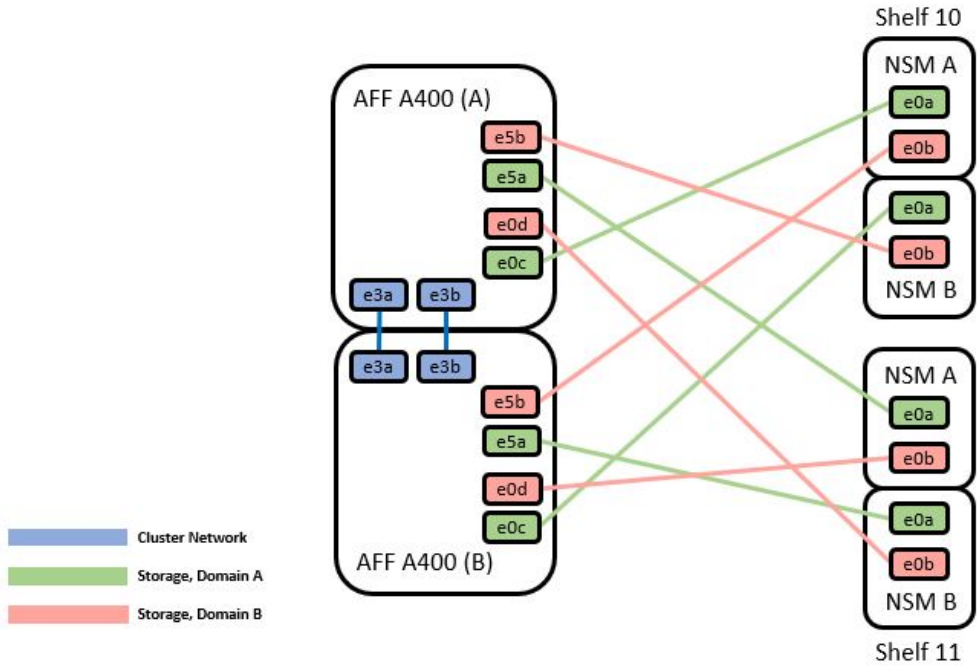

	Port	Node
Path_A	e0c	Node_A
		Node_B
	e5a	Node_A
		Node_B
Path_B	e5b	Node_A
		Node_B
	e0d	Node_A
		Node_B

See the Hardware Universe for more information on switch ports.

Cisco Nexus 9336C-FX2 cabling worksheet

If you want to document the supported platforms, you must complete the blank cabling worksheet by using completed sample cabling worksheet as a guide.

The sample port definition on each pair of switches is as follows:

	Switch A			Switch B	
Switch Port	Port Role	Port Usage	Switch Port	Port Role	Port Usage
1	Cluster	40/100GbE	1	Cluster	40/100GbE
2	Cluster	40/100GbE	2	Cluster	40/100GbE
3	Cluster	40/100GbE	3	Cluster	40/100GbE
4	Cluster	40/100GbE	4	Cluster	40/100GbE
5	Cluster	40/100GbE	5	Cluster	40/100GbE
6	Cluster	40/100GbE	6	Cluster	40/100GbE
7	Cluster	40/100GbE	7	Cluster	40/100GbE
8	Cluster	40/100GbE	8	Cluster	40/100GbE
9	Cluster	40GbE w/4x10GbE b/o	9	Cluster	40GbE w/4x10GbE b/o
10	Cluster	100GbE w/4x25GbE b/o	10	Cluster	100GbE w/4x25GbE b/o
11	Storage	100GbE	11	Storage	100GbE
12	Storage	100GbE	12	Storage	100GbE
13	Storage	100GbE	13	Storage	100GbE
14	Storage	100GbE	14	Storage	100GbE
15	Storage	100GbE	15	Storage	100GbE
16	Storage	100GbE	16	Storage	100GbE
17	Storage	100GbE	17	Storage	100GbE
18	Storage	100GbE	18	Storage	100GbE
19	Storage	100GbE	19	Storage	100GbE
20	Storage	100GbE	20	Storage	100GbE
21	Storage	100GbE	21	Storage	100GbE
22	Storage	100GbE	22	Storage	100GbE
23	Storage	100GbE	23	Storage	100GbE
24	Storage	100GbE	24	Storage	100GbE
25	Storage	100GbE	25	Storage	100GbE
26	Storage	100GbE	26	Storage	100GbE
27	Storage	100GbE	27	Storage	100GbE
28	Storage	100GbE	28	Storage	100GbE
29	Storage	100GbE	29	Storage	100GbE
30	Storage	100GbE	30	Storage	100GbE
31	Storage	100GbE	31	Storage	100GbE
32	Storage	100GbE	32	Storage	100GbE
33	Storage	100GbE	33	Storage	100GbE
34	Storage	100GbE	34	Storage	100GbE
35	ISL	100GbE	35	ISL	100GbE
36	ISL	100GbE	36	ISL	100GbE

Where:

- 100G ISL to switch A port 35
- 100G ISL to switch A port 36
- 100G ISL to switch B port 35
- 100G ISL to switch B port 36

Blank cabling worksheet

You can use the blank cabling worksheet to document the platforms that are supported as nodes in a cluster. The Supported Cluster Connections table of the Hardware Universe defines the cluster ports used by the platform.

	Switch A			Switch B	
Switch Port	Port Role	Port Usage	Switch Port	Port Role	Port Usage
1			1		
2			2		
3			3		
4			4		
5			5		
6			6		
7			7		
8			8		
9			9		
10			10		
11			11		
12			12		
13			13		
14			14		
15			15		
16			16		
17			17		
18			18		
19			19		
20			20		
21			21		
22			22		
23			23		
24			24		
25			25		
26			26		
27			27		
28			28		
29			29		
30			30		
31			31		
32			32		
33			33		
34			34		
35			35		
36			36		

Where:

- 100G ISL to switch A port 35
- 100G ISL to switch A port 36
- 100G ISL to switch B port 35
- 100G ISL to switch B port 36

Install Cisco Nexus 9336C-FX2 shared switches

Follow these instructions to configure Cisco Nexus 9336C-FX2 shared switches.

What you'll need

- Required shared switch documentation, controller documentation and ONTAP documentation. See Documentation requirements for Cisco Nexus 9336C-FX2 shared switches and NetApp ONTAP documentation.
- Applicable licenses, network and configuration information, and cables.
- Completed cabling worksheets. See Complete the Cisco Nexus 9336C-FX2 cabling worksheet. For more information on cabling, refer to the Hardware Universe.

Steps

1. Rack the switches, controllers and NS224 NVMe storage shelves.

   See the Racking instructions to learn how to rack the switch in a NetApp cabinet.

2. Power on the switches, controllers and NS224 NVMe storage shelves.

What's next?

Go to Configure Cisco Nexus 9336C-FX2 shared switch.

Configure Cisco Nexus 9336C-FX2 shared switches

Follow these instructions to configure Cisco Nexus 9336C-FX2 shared switches.

What you'll need

- Required shared switch documentation, controller documentation and ONTAP documentation. See Documentation requirements for Cisco Nexus 9336C-FX2 shared switches and NetApp ONTAP documentation.
- Applicable licenses, network and configuration information, and cables.
- Completed cabling worksheets. See Complete the Cisco Nexus 9336C-FX2 cabling worksheet. For more information on cabling, refer to the Hardware Universe.

Steps

1. Perform an initial configuration of the switches.

   For configuration, you need the appropriate number and type of cables and cable connectors for your switches.

   Depending on the type of switch you are initially configuring, you need to connect to the switch console port with the included console cable; you also need to provide specific network information.

2. Boot the switch.

   Provide the applicable responses to the following initial setup questions when you first boot the switch.

   Your site's security policy defines the responses and services to enable.

   a. Abort Auto Provisioning and continue with normal setup? (yes/no)

      Respond with **yes**. The default is no.

   b. Do you want to enforce secure password standard? (yes/no)

      Respond with **yes**. The default is yes.

c. Enter the password for admin.

   The default password is admin; you must create a new, strong password.

   A weak password can be rejected.

d. Would you like to enter the basic configuration dialog? (yes/no)

   Respond with **yes** at the initial configuration of the switch.

e. Create another login account? (yes/no)

   Your answer depends on your site's policies on alternate administrators. The default is no.

f. Configure read-only SNMP community string? (yes/no)

   Respond with **no**. The default is no.

g. Configure read-write SNMP community string? (yes/no)

   Respond with **no**. The default is no.

h. Enter the switch name.

   The switch name is limited to 63 alphanumeric characters.

i. Continue with out-of-band (mgmt0) management configuration? (yes/no)

   Respond with **yes** (the default) at that prompt. At the mgmt0 IPv4 address: prompt, enter your IP address: ip_address

j. Configure the default-gateway? (yes/no)

   Respond with **yes**. At the IPv4 address of the default-gateway: prompt, enter your default_gateway.

k. Configure advanced IP options? (yes/no)

   Respond with **no**. The default is no.

l. Enable the telnet service? (yes/no)

   Respond with **no**. The default is no.

m. Enable SSH service? (yes/no)

   Respond with **yes**. The default is yes.

   > SSH is recommended when using Cluster Switch Health Monitor (CSHM) for its log collection features. SSHv2 is also recommended for enhanced security.

n. Enter the type of SSH key you want to generate (dsa/rsa/rsa1). The default is rsa.

o. Enter the number of key bits (1024- 2048).

p. Configure the NTP server? (yes/no)

   Respond with **no**. The default is no.

q. Configure default interface layer (L3/L2):

   Respond with **L2**. The default is L2.

r. Configure default switch port interface state (shut/noshut):

   Respond with **noshut**. The default is noshut.

s. Configure CoPP system profile (strict/moderate/lenient/dense):

   Respond with **strict**. The default is strict.

t. Would you like to edit the configuration? (yes/no)

   You should see the new configuration at this point. Review and make any necessary changes to the configuration you just entered. Respond with no at the prompt if you are satisfied with the configuration. Respond with **yes** if you want to edit your configuration settings.

u. Use this configuration and save it? (yes/no)

   Respond with **yes** to save the configuration. This automatically updates the kickstart and system images.

3. Verify the configuration choices you made in the display that appears at the end of the setup, and make sure that you save the configuration.

   > If you do not save the configuration at this stage, none of the changes will be in effect the next time you reboot the switch.

4. Check the version on the cluster network switches, and if necessary, download the NetApp-supported version of the software to the switches from the Cisco software download page.

What's next?

Depending on your configuration, you can install switch in NetApp cabinet. Otherwise, go to Prepare to install NX-OS and RCF.

Install a Cisco Nexus 9336C-FX2 switch in a NetApp cabinet

Depending on your configuration, you might need to install the Cisco Nexus 9336C-FX2 switch and pass-through panel in a NetApp cabinet. Standard brackets are included with the switch.

What you'll need

- For each switch, you must supply the eight 10-32 or 12-24 screws and clip nuts to mount the brackets and slider rails to the front and rear cabinet posts.
- You must use the Cisco standard rail kit to install the switch in a NetApp cabinet.

> The jumper cords are not included with the pass-through kit and should be included with your switches. If they were not shipped with the switches, you can order them from NetApp (part number X1558A-R6).

Required documentation

Review the initial preparation requirements, kit contents, and safety precautions in the Cisco Nexus 9000 Series Hardware Installation Guide.

Steps

1. Install the pass-through blanking panel in the NetApp cabinet.

   The pass-through panel kit is available from NetApp (part number X8784-R6).

   The NetApp pass-through panel kit contains the following hardware:

   - One pass-through blanking panel
   - Four 10-32 x .75 screws
   - Four 10-32 clip nuts

     a. Determine the vertical location of the switches and blanking panel in the cabinet.

        In this procedure, the blanking panel will be installed in U40.

     b. Install two clip nuts on each side in the appropriate square holes for front cabinet rails.

     c. Center the panel vertically to prevent intrusion into adjacent rack space, and then tighten the screws.

     d. Insert the female connectors of both 48-inch jumper cords from the rear of the panel and through the brush assembly.

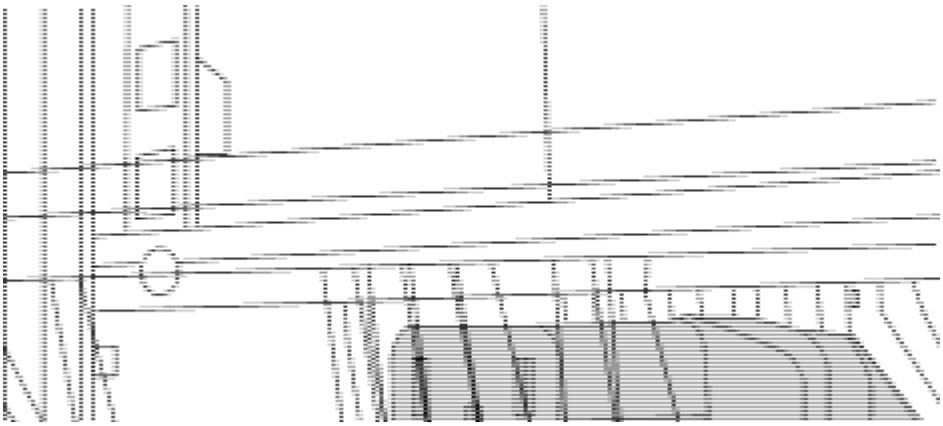

(1) Female connector of the jumper cord.

2. Install the rack-mount brackets on the Nexus 9336C-FX2 switch chassis.

   a. Position a front rack-mount bracket on one side of the switch chassis so that the mounting ear is aligned with the chassis faceplate (on the PSU or fan side), and then use four M4 screws to attach the bracket to the chassis.

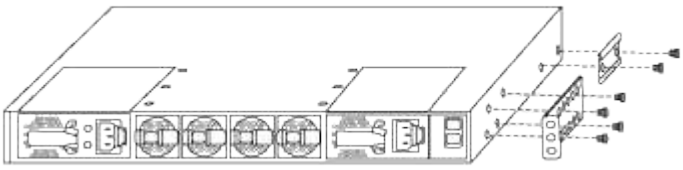

   b. Repeat step 2a with the other front rack-mount bracket on the other side of the switch.

   c. Install the rear rack-mount bracket on the switch chassis.

d. Repeat step 2c with the other rear rack-mount bracket on the other side of the switch.

3. Install the clip nuts in the square hole locations for all four IEA posts.

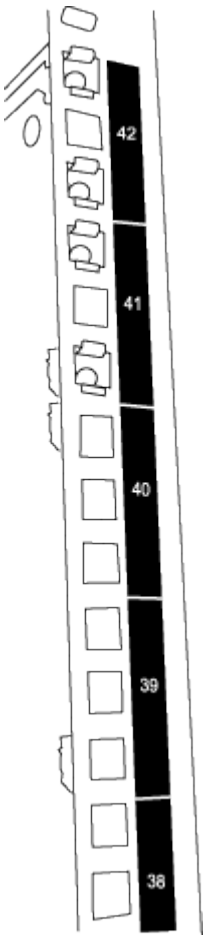

The two 9336C-FX2 switches will always be mounted in the top 2U of the cabinet RU41 and 42.

4. Install the slider rails in the cabinet.

a. Position the first slider rail at the RU42 mark on the back side of the rear left post, insert screws with the matching thread type, and then tighten the screws with your fingers.

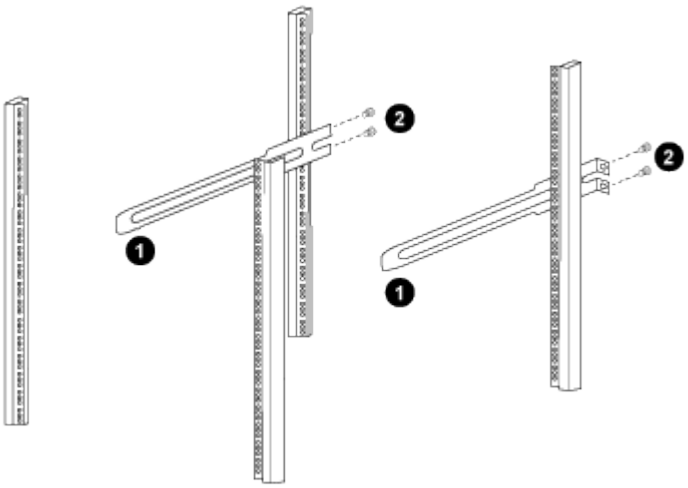

(1) As you gently slide the slider rail, align it to the screw holes in the rack.

(2) Tighten the screws of the slider rails to the cabinet posts.

b. Repeat step 4a for the right side rear post.

c. Repeat steps 4a and 4b at the RU41 locations on the cabinet.

5. Install the switch in the cabinet.

> This step requires two people: one person to support the switch from the front and another to guide the switch into the rear slider rails.

a. Position the back of the switch at RU41.

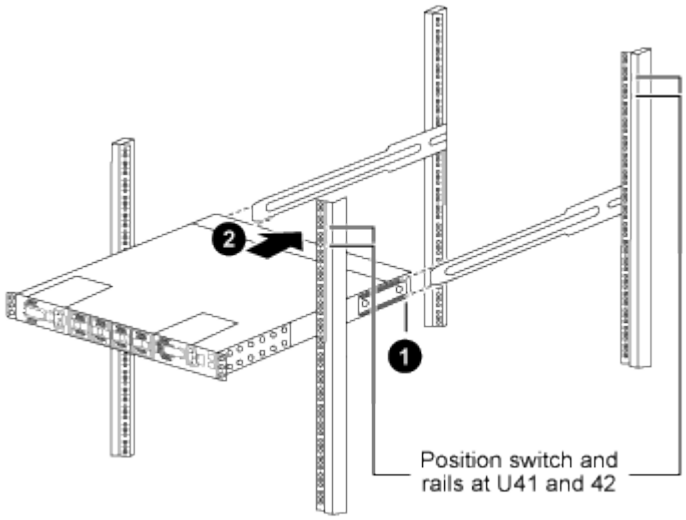

(1) As the chassis is pushed toward the rear posts, align the two rear rack-mount guides with the slider rails.

(2) Gently slide the switch until the front rack-mount brackets are flush with the front posts.

b. Attach the switch to the cabinet.

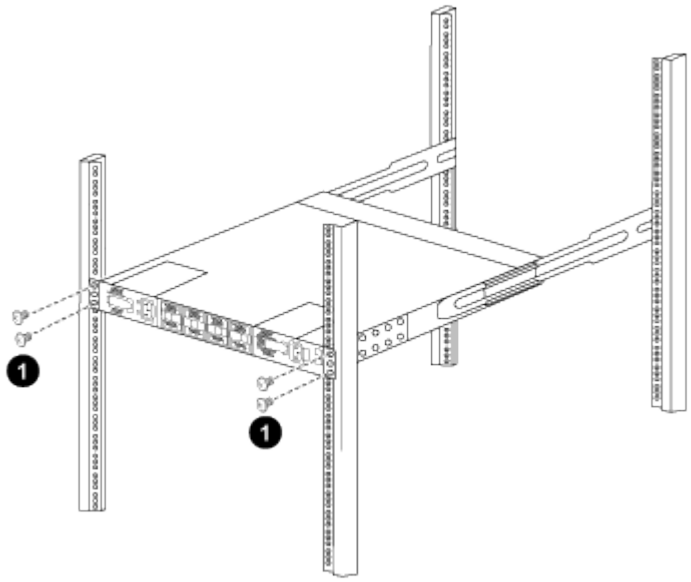

(1) With one person holding the front of the chassis level, the other person should fully tighten the four rear screws to the cabinet posts.

c. With the chassis now supported without assistance, fully tighten the front screws to the posts.

d. Repeat steps 5a through 5c for the second switch at the RU42 location.

> By using the fully installed switch as a support, it is not necessary to hold the front of the second switch during the installation process.

6. When the switches are installed, connect the jumper cords to the switch power inlets.
7. Connect the male plugs of both jumper cords to the closest available PDU outlets.

> To maintain redundancy, the two cords must be connected to different PDUs.

8. Connect the management port on each 9336C-FX2 switch to either of the management switches (if ordered) or connect them directly to your management network.

   The management port is the upper-right port located on the PSU side of the switch. The CAT6 cable for each switch needs to be routed through the pass-through panel after the switches are installed to connect to the management switches or management network.

Configure software

Software install workflow for Cisco Nexus 9336C-FX2 shared switches

To install and configure software for a Cisco Nexus 9336C-FX2 switch, follow these steps:

1. Prepare to install NX-OS and RCF.
2. Install the NX-OS software.
3. Install the RCF.

   Install the RCF after setting up the Nexus 9336C-FX2 switch for the first time. You can also use this procedure to upgrade your RCF version.

Prepare to install NX-OS software and RCF

Before you install the NX-OS software and the Reference Configuration File (RCF), follow this procedure.

About the examples

The examples in this procedure use the following switch and node nomenclature:

- The names of the two Cisco switches are cs1 and cs2.
- The node names are cluster1-01 and cluster1-02.
- The cluster LIF names are cluster1-01_clus1 and cluster1-01_clus2 for cluster1-01 and cluster1-02_clus1 and cluster1-02_clus2 for cluster1-02.
- The `cluster1::*>` prompt indicates the name of the cluster.

About this task

The procedure requires the use of both ONTAP commands and Cisco Nexus 9000 Series Switches

commands; ONTAP commands are used unless otherwise indicated.

Steps

1. If AutoSupport is enabled on this cluster, suppress automatic case creation by invoking an AutoSupport message: `system node autosupport invoke -node * -type all -message MAINT=x h`

   where x is the duration of the maintenance window in hours.

   > The AutoSupport message notifies technical support of this maintenance task so that automatic case creation is suppressed during the maintenance window.

2. Change the privilege level to advanced, entering **y** when prompted to continue:

   ```
   set -privilege advanced
   ```

   The advanced prompt (`*>`) appears.

3. Display how many cluster interconnect interfaces are configured in each node for each cluster interconnect switch:

   ```
   network device-discovery show -protocol cdp
   ```

   Show example

   ```
   cluster1::*> network device-discovery show -protocol cdp

   Node/       Local  Discovered
   Protocol    Port   Device (LLDP: ChassisID)  Interface
   Platform
   ----------- ------ ------------------------- -----------------
   --------
   cluster1-02/cdp
               e0a    cs1                       Eth1/2            N9K-
   C9336C
               e0b    cs2                       Eth1/2            N9K-
   C9336C
   cluster1-01/cdp
               e0a    cs1                       Eth1/1            N9K-
   C9336C
               e0b    cs2                       Eth1/1            N9K-
   C9336C

   4 entries were displayed.
   ```

4. Check the administrative or operational status of each cluster interface.

   a. Display the network port attributes:

```
`network port show -ipspace Cluster`
```

Show example

```
cluster1::*> network port show -ipspace Cluster

Node: cluster1-02
                                                        Speed(Mbps)
Health
Port      IPspace      Broadcast Domain Link MTU  Admin/Oper
Status
--------- ------------ ---------------- ---- ---- -----------
------
e0a       Cluster      Cluster          up   9000  auto/10000
healthy
e0b       Cluster      Cluster          up   9000  auto/10000
healthy

Node: cluster1-01
                                                        Speed(Mbps)
Health
Port      IPspace      Broadcast Domain Link MTU  Admin/Oper
Status
--------- ------------ ---------------- ---- ---- -----------
------
e0a       Cluster      Cluster          up   9000  auto/10000
healthy
e0b       Cluster      Cluster          up   9000  auto/10000
healthy

4 entries were displayed.
```

b. Display information about the LIFs:

```
network interface show -vserver Cluster
```

Show example

```
cluster1::*> network interface show -vserver Cluster

            Logical            Status     Network
Current       Current Is
Vserver     Interface          Admin/Oper Address/Mask       Node
Port    Home
----------- ------------------ ---------- ------------------
------------- ------- ----
Cluster
            cluster1-01_clus1  up/up      169.254.209.69/16
cluster1-01   e0a     true
            cluster1-01_clus2  up/up      169.254.49.125/16
cluster1-01   e0b     true
            cluster1-02_clus1  up/up      169.254.47.194/16
cluster1-02   e0a     true
            cluster1-02_clus2  up/up      169.254.19.183/16
cluster1-02   e0b     true

4 entries were displayed.
```

5. Ping the remote cluster LIFs:

   ```
   cluster ping-cluster -node node-name
   ```

Show example

```
cluster1::*> cluster ping-cluster -node cluster1-02
Host is cluster1-02
Getting addresses from network interface table...
Cluster cluster1-01_clus1 169.254.209.69 cluster1-01     e0a
Cluster cluster1-01_clus2 169.254.49.125 cluster1-01     e0b
Cluster cluster1-02_clus1 169.254.47.194 cluster1-02     e0a
Cluster cluster1-02_clus2 169.254.19.183 cluster1-02     e0b
Local = 169.254.47.194 169.254.19.183
Remote = 169.254.209.69 169.254.49.125
Cluster Vserver Id = 4294967293
Ping status:

Basic connectivity succeeds on 4 path(s)
Basic connectivity fails on 0 path(s)

Detected 9000 byte MTU on 4 path(s):
    Local 169.254.19.183 to Remote 169.254.209.69
    Local 169.254.19.183 to Remote 169.254.49.125
    Local 169.254.47.194 to Remote 169.254.209.69
    Local 169.254.47.194 to Remote 169.254.49.125
Larger than PMTU communication succeeds on 4 path(s)
RPC status:
2 paths up, 0 paths down (tcp check)
2 paths up, 0 paths down (udp check)
```

6. Verify that the auto-revert command is enabled on all cluster LIFs:

```
network interface show -vserver Cluster -fields auto-revert
```

Show example

```
cluster1::*> network interface show -vserver Cluster -fields auto-
revert

          Logical
Vserver   Interface           Auto-revert
--------- -------------------- ------------
Cluster
          cluster1-01_clus1   true
          cluster1-01_clus2   true
          cluster1-02_clus1   true
          cluster1-02_clus2   true
4 entries were displayed.
```

7. For ONTAP 9.8 and later, enable the Ethernet switch health monitor log collection feature for collecting switch-related log files, using the commands:

   `system switch ethernet log setup-password` and `system switch ethernet log enable-collection`

Show example

```
cluster1::*> system switch ethernet log setup-password
Enter the switch name: <return>
The switch name entered is not recognized.
Choose from the following list:
cs1
cs2

cluster1::*> system switch ethernet log setup-password

Enter the switch name: cs1
RSA key fingerprint is
e5:8b:c6:dc:e2:18:18:09:36:63:d9:63:dd:03:d9:cc
Do you want to continue? {y|n}::[n] y

Enter the password: <enter switch password>
Enter the password again: <enter switch password>

cluster1::*> system switch ethernet log setup-password

Enter the switch name: cs2
RSA key fingerprint is
57:49:86:a1:b9:80:6a:61:9a:86:8e:3c:e3:b7:1f:b1
Do you want to continue? {y|n}:: [n] y

Enter the password: <enter switch password>
Enter the password again: <enter switch password>

cluster1::*> system  switch ethernet log enable-collection

Do you want to enable cluster log collection for all nodes in the
cluster?
{y|n}: [n] y

Enabling cluster switch log collection.

cluster1::*>
```

If any of these commands return an error, contact NetApp support.

8. For ONTAP releases 9.5P16, 9.6P12, and 9.7P10 and later patch releases, enable the Ethernet switch health monitor log collection feature for collecting switch-related log files, using the commands:

   `system cluster-switch log setup-password` and `system cluster-switch log enable-`

```
collection
```

Show example

```
cluster1::*> system cluster-switch log setup-password
Enter the switch name: <return>
The switch name entered is not recognized.
Choose from the following list:
cs1
cs2

cluster1::*> system cluster-switch log setup-password

Enter the switch name: cs1
RSA key fingerprint is
e5:8b:c6:dc:e2:18:18:09:36:63:d9:63:dd:03:d9:cc
Do you want to continue? {y|n}::[n] y

Enter the password: <enter switch password>
Enter the password again: <enter switch password>

cluster1::*> system cluster-switch log setup-password

Enter the switch name: cs2
RSA key fingerprint is
57:49:86:a1:b9:80:6a:61:9a:86:8e:3c:e3:b7:1f:b1
Do you want to continue? {y|n}:: [n] y

Enter the password: <enter switch password>
Enter the password again: <enter switch password>

cluster1::*> system cluster-switch log enable-collection

Do you want to enable cluster log collection for all nodes in the
cluster?
{y|n}: [n] y

Enabling cluster switch log collection.

cluster1::*>
```

If any of these commands return an error, contact NetApp support.

What's next?

Install the NX-OS software.

Install the NX-OS software

Follow this procedure to install the NX-OS software on the Nexus 9336C-FX2 shared switch.

Before you begin, complete the procedure in Prepare to install NX-OS and RCF.

Review requirements

What you'll need

- A current backup of the switch configuration.
- A fully functioning cluster (no errors in the logs or similar issues).
- Cisco Ethernet switch page. Consult the switch compatibility table for the supported ONTAP and NX-OS versions.
- Appropriate software and upgrade guides available on the Cisco web site for the Cisco switch upgrade and downgrade procedures. See Cisco Nexus 9000 Series Switches.

About the examples

The examples in this procedure use the following switch and node nomenclature:

- The names of the two Cisco switches are cs1 and cs2.
- The node names are cluster1-01, cluster1-02, cluster1-03, and cluster1-04.
- The cluster LIF names are cluster1-01_clus1, cluster1-01_clus2, cluster1-02_clus1, cluster1-02_clus2 , cluster1-03_clus1, cluster1-03_clus2, cluster1-04_clus1, and cluster1-04_clus2.
- The `cluster1::*>` prompt indicates the name of the cluster.

Install the software

The procedure requires the use of both ONTAP commands and Cisco Nexus 9000 Series Switches commands; ONTAP commands are used unless otherwise indicated.

Steps

1. Connect the cluster switch to the management network.
2. Use the ping command to verify connectivity to the server hosting the NX-OS software and the RCF.

   Show example

   This example verifies that the switch can reach the server at IP address 172.19.2.1:

   ```
   cs2# ping 172.19.2.1
   Pinging 172.19.2.1 with 0 bytes of data:

   Reply From 172.19.2.1: icmp_seq = 0. time= 5910 usec.
   ```

3. Copy the NX-OS software and EPLD images to the Nexus 9336C-FX2 switch.

Show example

```
cs2# copy sftp: bootflash: vrf management
Enter source filename: /code/nxos.9.3.5.bin
Enter hostname for the sftp server: 172.19.2.1
Enter username: user1

Outbound-ReKey for 172.19.2.1:22
Inbound-ReKey for 172.19.2.1:22
user1@172.19.2.1's password:
sftp> progress
Progress meter enabled
sftp> get   /code/nxos.9.3.5.bin  /bootflash/nxos.9.3.5.bin
/code/nxos.9.3.5.bin  100% 1261MB   9.3MB/s   02:15
sftp> exit
Copy complete, now saving to disk (please wait)...
Copy complete.


cs2# copy sftp: bootflash: vrf management

Enter source filename: /code/n9000-epld.9.3.5.img
Enter hostname for the sftp server: 172.19.2.1
Enter username: user1

Outbound-ReKey for 172.19.2.1:22
Inbound-ReKey for 172.19.2.1:22
user1@172.19.2.1's password:
sftp> progress
Progress meter enabled
sftp> get   /code/n9000-epld.9.3.5.img  /bootflash/n9000-
epld.9.3.5.img
/code/n9000-epld.9.3.5.img  100%  161MB   9.5MB/s   00:16
sftp> exit
Copy complete, now saving to disk (please wait)...
Copy complete.
```

4. Verify the running version of the NX-OS software:

```
show version
```

Show example

```
cs2# show version
Cisco Nexus Operating System (NX-OS) Software
TAC support: http://www.cisco.com/tac
Copyright (C) 2002-2020, Cisco and/or its affiliates.
All rights reserved.
The copyrights to certain works contained in this software are
owned by other third parties and used and distributed under their
own
licenses, such as open source.  This software is provided "as is,"
and unless
otherwise stated, there is no warranty, express or implied,
including but not
limited to warranties of merchantability and fitness for a
particular purpose.
Certain components of this software are licensed under
the GNU General Public License (GPL) version 2.0 or
GNU General Public License (GPL) version 3.0  or the GNU
Lesser General Public License (LGPL) Version 2.1 or
Lesser General Public License (LGPL) Version 2.0.
A copy of each such license is available at
http://www.opensource.org/licenses/gpl-2.0.php and
http://opensource.org/licenses/gpl-3.0.html and
http://www.opensource.org/licenses/lgpl-2.1.php and
http://www.gnu.org/licenses/old-licenses/library.txt.

Software
  BIOS: version 08.38
  NXOS: version 9.3(4)
  BIOS compile time:  05/29/2020
  NXOS image file is: bootflash:///nxos.9.3.4.bin
  NXOS compile time:  4/28/2020 21:00:00 [04/29/2020 02:28:31]


Hardware
  cisco Nexus9000 C9336C-FX2 Chassis
  Intel(R) Xeon(R) CPU E5-2403 v2 @ 1.80GHz with 8154432 kB of
memory.
  Processor Board ID FOC20291J6K

  Device name: cs2
  bootflash:   53298520 kB
Kernel uptime is 0 day(s), 0 hour(s), 3 minute(s), 42 second(s)
```

```
Last reset at 157524 usecs after Mon Nov  2 18:32:06 2020
  Reason: Reset Requested by CLI command reload
  System version: 9.3(4)
  Service:

plugin
  Core Plugin, Ethernet Plugin

Active Package(s):


cs2#
```

5. Install the NX-OS image.

   Installing the image file causes it to be loaded every time the switch is rebooted.

Show example

```
cs2# install all nxos bootflash:nxos.9.3.5.bin

Installer will perform compatibility check first. Please wait.
Installer is forced disruptive

Verifying image bootflash:/nxos.9.3.5.bin for boot variable "nxos".
[####################] 100% -- SUCCESS

Verifying image type.
[####################] 100% -- SUCCESS

Preparing "nxos" version info using image bootflash:/nxos.9.3.5.bin.
[####################] 100% -- SUCCESS

Preparing "bios" version info using image bootflash:/nxos.9.3.5.bin.
[####################] 100% -- SUCCESS

Performing module support checks.
[####################] 100% -- SUCCESS

Notifying services about system upgrade.
[####################] 100% -- SUCCESS



Compatibility check is done:
Module  bootable       Impact     Install-type  Reason
------  --------  --------------- ------------  ------
  1       yes      disruptive         reset     default upgrade is
not hitless



Images will be upgraded according to following table:

Module   Image    Running-Version(pri:alt                  New-
Version         Upg-Required
------- --------- ----------------------------------------
------------------- ------------
  1      nxos     9.3(4)                                   9.3(5)
yes
  1      bios     v08.37(01/28/2020):v08.23(09/23/2015)
v08.38(05/29/2020)      yes
```

```
Switch will be reloaded for disruptive upgrade.

Do you want to continue with the installation (y/n)? [n] y

Install is in progress, please wait.

Performing runtime checks.
[####################] 100% -- SUCCESS

Setting boot variables.
[####################] 100% -- SUCCESS

Performing configuration copy.
[####################] 100% -- SUCCESS

Module 1: Refreshing compact flash and upgrading
bios/loader/bootrom.
Warning: please do not remove or power off the module at this time.
[####################] 100% -- SUCCESS

Finishing the upgrade, switch will reboot in 10 seconds.
```

6. Verify the new version of NX-OS software after the switch has rebooted:

```
show version
```

Show example

```
cs2# show version

Cisco Nexus Operating System (NX-OS) Software
TAC support: http://www.cisco.com/tac
Copyright (C) 2002-2020, Cisco and/or its affiliates.
All rights reserved.
The copyrights to certain works contained in this software are
owned by other third parties and used and distributed under their
own
licenses, such as open source.  This software is provided "as is,"
and unless
otherwise stated, there is no warranty, express or implied,
including but not
limited to warranties of merchantability and fitness for a
particular purpose.
Certain components of this software are licensed under
the GNU General Public License (GPL) version 2.0 or
GNU General Public License (GPL) version 3.0  or the GNU
Lesser General Public License (LGPL) Version 2.1 or
Lesser General Public License (LGPL) Version 2.0.
A copy of each such license is available at
http://www.opensource.org/licenses/gpl-2.0.php and
http://opensource.org/licenses/gpl-3.0.html and
http://www.opensource.org/licenses/lgpl-2.1.php and
http://www.gnu.org/licenses/old-licenses/library.txt.

Software
  BIOS: version 05.33
  NXOS: version 9.3(5)
  BIOS compile time:  09/08/2018
  NXOS image file is: bootflash:///nxos.9.3.5.bin
  NXOS compile time:  11/4/2018 21:00:00 [11/05/2018 06:11:06]


Hardware
  cisco Nexus9000 C9336C-FX2 Chassis
  Intel(R) Xeon(R) CPU E5-2403 v2 @ 1.80GHz with 8154432 kB of
memory.
  Processor Board ID FOC20291J6K

  Device name: cs2
  bootflash:   53298520 kB
Kernel uptime is 0 day(s), 0 hour(s), 3 minute(s), 42 second(s)
```

```
Last reset at 277524 usecs after Mon Nov  2 22:45:12 2020
  Reason: Reset due to upgrade
  System version: 9.3(4)
  Service:

plugin
  Core Plugin, Ethernet Plugin

Active Package(s):
```

7. Upgrade the EPLD image and reboot the switch.

Show example

```
cs2# show version module 1 epld

EPLD Device                      Version
---------------------------------------
MI   FPGA                         0x7
IO   FPGA                         0x17
MI   FPGA2                        0x2
GEM  FPGA                         0x2
GEM  FPGA                         0x2
GEM  FPGA                         0x2
GEM  FPGA                         0x2

cs2# install epld bootflash:n9000-epld.9.3.5.img module 1
Compatibility check:
Module        Type         Upgradable        Impact   Reason
------  ------------------ ----------------- --------- -----
     1         SUP         Yes       disruptive  Module Upgradable

Retrieving EPLD versions.... Please wait.
Images will be upgraded according to following table:
Module  Type   EPLD              Running-Version   New-Version  Upg-
Required
------- ------ ----------------- ----------------- ------------
------------
     1  SUP    MI FPGA           0x07              0x07         No
     1  SUP    IO FPGA           0x17              0x19         Yes
     1  SUP    MI FPGA2          0x02              0x02         No
The above modules require upgrade.
The switch will be reloaded at the end of the upgrade
Do you want to continue (y/n) ?  [n] y

Proceeding to upgrade Modules.

Starting Module 1 EPLD Upgrade

Module 1 : IO FPGA [Programming] : 100.00% (     64 of      64
sectors)
Module 1 EPLD upgrade is successful.
Module   Type  Upgrade-Result
-------- ----- --------------
     1   SUP   Success

EPLDs upgraded.

Module 1 EPLD upgrade is successful.
```

8. After the switch reboot, log in again and verify that the new version of EPLD loaded successfully.

Show example

```
cs2# show version module 1 epld

EPLD Device                      Version
--------------------------------------
MI   FPGA                         0x7
IO   FPGA                         0x19
MI   FPGA2                        0x2
GEM  FPGA                         0x2
GEM  FPGA                         0x2
GEM  FPGA                         0x2
GEM  FPGA                         0x2
```

9. Repeat steps 1 to 8 to install the NX-OS software on switch cs1.

What's next?

Install RCF config file

Install the Reference Configuration File (RCF)

You can install the RCF after setting up the Nexus 9336C-FX2 switch for the first time. You can also use this procedure to upgrade your RCF version.

Before you begin, complete the procedure in Prepare to install NX-OS and RCF.

Review requirements

What you'll need

- A current backup of the switch configuration.
- A fully functioning cluster (no errors in the logs or similar issues).
- The current RCF file.
- A console connection to the switch, required when installing the RCF.

Suggested documentation

- Cisco Ethernet switch page Consult the switch compatibility table for the supported ONTAP and RCF versions. Note that there can be command dependencies between the command syntax in the RCF and that found in versions of NX-OS.
- Cisco Nexus 3000 Series Switches. Refer to the appropriate software and upgrade guides available on the Cisco web site for complete documentation on the Cisco switch upgrade and downgrade procedures.

Install the RCF

About the examples

The examples in this procedure use the following switch and node nomenclature:

- The names of the two Cisco switches are cs1 and cs2.
- The node names are cluster1-01, cluster1-02, cluster1-03, and cluster1-04.
- The cluster LIF names are cluster1-01_clus1, cluster1-01_clus2, cluster1-02_clus1, cluster1-02_clus2 , cluster1-03_clus1, cluster1-03_clus2, cluster1-04_clus1, and cluster1-04_clus2.
- The `cluster1::*>` prompt indicates the name of the cluster.

The examples in this procedure use two nodes. These nodes use two 10GbE cluster interconnect ports e0a and e0b. See the Hardware Universe to verify the correct cluster ports on your platforms.

The command outputs might vary depending on different releases of ONTAP.

About this task

The procedure requires the use of both ONTAP commands and Cisco Nexus 9000 Series Switches commands; ONTAP commands are used unless otherwise indicated.

No operational inter-switch link (ISL) is needed during this procedure. This is by design because RCF version changes can affect ISL connectivity temporarily. To ensure non-disruptive cluster operations, the following procedure migrates all of the cluster LIFs to the operational partner switch while performing the steps on the target switch.

Before installing a new switch software version and RCFs, you must erase the switch settings and perform basic configuration. You must be connected to the switch using the serial console. This task resets the configuration of the management network.

Step 1: Prepare for the installation

1. Display the cluster ports on each node that are connected to the cluster switches:

   ```
   network device-discovery show
   ```

Show example

```
cluster1::*> network device-discovery show
Node/       Local  Discovered
Protocol    Port   Device (LLDP: ChassisID)  Interface
Platform
----------- ------ ------------------------- ----------------
--------
cluster1-01/cdp
            e0a    cs1                       Ethernet1/7       N9K-
C9336C
            e0d    cs2                       Ethernet1/7       N9K-
C9336C
cluster1-02/cdp
            e0a    cs1                       Ethernet1/8       N9K-
C9336C
            e0d    cs2                       Ethernet1/8       N9K-
C9336C
cluster1-03/cdp
            e0a    cs1                       Ethernet1/1/1     N9K-
C9336C
            e0b    cs2                       Ethernet1/1/1     N9K-
C9336C
cluster1-04/cdp
            e0a    cs1                       Ethernet1/1/2     N9K-
C9336C
            e0b    cs2                       Ethernet1/1/2     N9K-
C9336C
cluster1::*>
```

2. Check the administrative and operational status of each cluster port.
   a. Verify that all the cluster ports are **up** with a healthy status:

      `network port show -role cluster`

Show example

```
cluster1::*> network port show -role cluster

Node: cluster1-01

Ignore
                                                        Speed(Mbps)
Health   Health
Port      IPspace      Broadcast Domain Link MTU  Admin/Oper
Status   Status
--------- ------------ ---------------- ---- ---- -----------
-------- ------
e0a       Cluster      Cluster          up   9000  auto/100000
healthy false
e0d       Cluster      Cluster          up   9000  auto/100000
healthy false

Node: cluster1-02

Ignore
                                                        Speed(Mbps)
Health   Health
Port      IPspace      Broadcast Domain Link MTU  Admin/Oper
Status   Status
--------- ------------ ---------------- ---- ---- -----------
-------- ------
e0a       Cluster      Cluster          up   9000  auto/100000
healthy false
e0d       Cluster      Cluster          up   9000  auto/100000
healthy false
8 entries were displayed.

Node: cluster1-03

   Ignore
                                                        Speed(Mbps)
Health   Health
Port      IPspace      Broadcast Domain Link MTU  Admin/Oper
Status   Status
--------- ------------ ---------------- ---- ---- -----------
-------- ------
e0a       Cluster      Cluster          up   9000  auto/10000
healthy  false
e0b       Cluster      Cluster          up   9000  auto/10000
healthy  false
```

```
Node: cluster1-04

Ignore
                                                          Speed(Mbps)
Health   Health
Port      IPspace      Broadcast Domain Link MTU  Admin/Oper
Status   Status
--------- ------------ ---------------- ---- ---- -----------
-------- ------
e0a       Cluster      Cluster          up   9000  auto/10000
healthy  false
e0b       Cluster      Cluster          up   9000  auto/10000
healthy  false
cluster1::*>
```

b. Verify that all the cluster interfaces (LIFs) are on the home port:

```
network interface show -role cluster
```

Show example

```
cluster1::*> network interface show -role cluster
            Logical            Status     Network
Current      Current Is
Vserver     Interface          Admin/Oper Address/Mask      Node
Port    Home
----------- ------------------ ---------- -----------------
------------ ------- ----
Cluster
            cluster1-01_clus1  up/up     169.254.3.4/23
cluster1-01  e0a     true
            cluster1-01_clus2  up/up     169.254.3.5/23
cluster1-01  e0d     true
            cluster1-02_clus1  up/up     169.254.3.8/23
cluster1-02  e0a     true
            cluster1-02_clus2  up/up     169.254.3.9/23
cluster1-02  e0d     true
            cluster1-03_clus1  up/up     169.254.1.3/23
cluster1-03  e0a     true
            cluster1-03_clus2  up/up     169.254.1.1/23
cluster1-03  e0b     true
            cluster1-04_clus1  up/up     169.254.1.6/23
cluster1-04  e0a     true
            cluster1-04_clus2  up/up     169.254.1.7/23
cluster1-04  e0b     true
8 entries were displayed.
cluster1::*>
```

c. Verify that the cluster displays information for both cluster switches:

```
system cluster-switch show -is-monitoring-enabled-operational true
```

Show example

```
cluster1::*> system cluster-switch show -is-monitoring-enabled
-operational true
Switch                      Type               Address
Model
--------------------------- ------------------ ----------------
-----
cs1                         cluster-network    10.233.205.90
N9K-C9336C
     Serial Number: FOCXXXXXXGD
      Is Monitored: true
            Reason: None
  Software Version: Cisco Nexus Operating System (NX-OS)
Software, Version
                    9.3(5)
    Version Source: CDP

cs2                         cluster-network    10.233.205.91
N9K-C9336C
     Serial Number: FOCXXXXXXGS
      Is Monitored: true
            Reason: None
  Software Version: Cisco Nexus Operating System (NX-OS)
Software, Version
                    9.3(5)
    Version Source: CDP
cluster1::*>
```

3. Disable auto-revert on the cluster LIFs.

Show example

```
cluster1::*> network interface modify -vserver Cluster -lif * -auto
-revert false
```

Step 2: Configure ports

1. On cluster switch cs2, shut down the ports connected to the cluster ports of the nodes.

Show example

```
cs2(config)# interface eth1/1/1-2,eth1/7-8
cs2(config-if-range)# shutdown
```

2. Verify that the cluster LIFs have migrated to the ports hosted on cluster switch cs1. This might take a few seconds.

```
network interface show -role cluster
```

Show example

```
cluster1::*> network interface show -role cluster
            Logical           Status     Network            Current
Current Is
Vserver     Interface         Admin/Oper Address/Mask       Node
Port    Home
----------- ----------------- ---------- ------------------
------------- ------- ----
Cluster
            cluster1-01_clus1 up/up      169.254.3.4/23
cluster1-01   e0a     true
            cluster1-01_clus2 up/up      169.254.3.5/23
cluster1-01   e0a     false
            cluster1-02_clus1 up/up      169.254.3.8/23
cluster1-02   e0a     true
            cluster1-02_clus2 up/up      169.254.3.9/23
cluster1-02   e0a     false
            cluster1-03_clus1 up/up      169.254.1.3/23
cluster1-03   e0a     true
            cluster1-03_clus2 up/up      169.254.1.1/23
cluster1-03   e0a     false
            cluster1-04_clus1 up/up      169.254.1.6/23
cluster1-04   e0a     true
            cluster1-04_clus2 up/up      169.254.1.7/23
cluster1-04   e0a     false
8 entries were displayed.
cluster1::*>
```

3. Verify that the cluster is healthy:

```
cluster show
```

Show example

```
cluster1::*> cluster show
Node                  Health  Eligibility   Epsilon
--------------------- ------- ------------  -------
cluster1-01           true    true          false
cluster1-02           true    true          false
cluster1-03           true    true          true
cluster1-04           true    true          false
4 entries were displayed.
cluster1::*>
```

4. If you have not already done so, save a copy of the current switch configuration by copying the output of the following command to a text file:

```
show running-config
```

5. Clean the configuration on switch cs2 and perform a basic setup.

> When updating or applying a new RCF, you must erase the switch settings and perform basic configuration. You must be connected to the switch serial console port to set up the switch again.

a. Clean the configuration:

Show example

```
(cs2)# write erase

Warning: This command will erase the startup-configuration.

Do you wish to proceed anyway? (y/n)  [n]  y
```

b. Perform a reboot of the switch:

Show example

```
(cs2)# reload

Are you sure you would like to reset the system? (y/n) y
```

6. Copy the RCF to the bootflash of switch cs2 using one of the following transfer protocols: FTP, TFTP, SFTP, or SCP. For more information on Cisco commands, see the appropriate guide in the Cisco Nexus 9000 Series NX-OS Command Reference guides.

   Show example

   This example shows TFTP being used to copy an RCF to the bootflash on switch cs2:

   ```
   cs2# copy tftp: bootflash: vrf management
   Enter source filename: Nexus_9336C_RCF_v1.6-Cluster-HA-Breakout.txt
   Enter hostname for the tftp server: 172.22.201.50
   Trying to connect to tftp server......Connection to Server
   Established.
   TFTP get operation was successful
   Copy complete, now saving to disk (please wait)...
   ```

7. Apply the RCF previously downloaded to the bootflash.

   For more information on Cisco commands, see the appropriate guide in the Cisco Nexus 9000 Series NX-OS Command Reference guides.

   Show example

   This example shows the RCF file `Nexus_9336C_RCF_v1.6-Cluster-HA-Breakout.txt` being installed on switch cs2:

   ```
   cs2# copy Nexus_9336C_RCF_v1.6-Cluster-HA-Breakout.txt running-
   config echo-commands
   ```

8. Examine the banner output from the `show banner motd` command. You must read and follow these instructions to ensure the proper configuration and operation of the switch.

Show example

```
cs2# show banner motd

*********************************************************************
**********
* NetApp Reference Configuration File (RCF)
*
* Switch   : Nexus N9K-C9336C-FX2
* Filename : Nexus_9336C_RCF_v1.6-Cluster-HA-Breakout.txt
* Date     : 10-23-2020
* Version  : v1.6
*
* Port Usage:
* Ports  1- 3: Breakout mode (4x10G) Intra-Cluster Ports, int
e1/1/1-4, e1/2/1-4
, e1/3/1-4
* Ports  4- 6: Breakout mode (4x25G) Intra-Cluster/HA Ports, int
e1/4/1-4, e1/5/
1-4, e1/6/1-4
* Ports  7-34: 40/100GbE Intra-Cluster/HA Ports, int e1/7-34
* Ports 35-36: Intra-Cluster ISL Ports, int e1/35-36
*
* Dynamic breakout commands:
* 10G: interface breakout module 1 port <range> map 10g-4x
* 25G: interface breakout module 1 port <range> map 25g-4x
*
* Undo breakout commands and return interfaces to 40/100G
configuration in confi
g mode:
* no interface breakout module 1 port <range> map 10g-4x
* no interface breakout module 1 port <range> map 25g-4x
* interface Ethernet <interfaces taken out of breakout mode>
* inherit port-profile 40-100G
* priority-flow-control mode auto
* service-policy input HA
* exit
*
*********************************************************************
**********
```

9. Verify that the RCF file is the correct newer version:

```
show running-config
```

When you check the output to verify you have the correct RCF, make sure that the following information is correct:

- The RCF banner
- The node and port settings
- Customizations

  The output varies according to your site configuration. Check the port settings and refer to the release notes for any changes specific to the RCF that you have installed.

10. After you verify the RCF versions and switch settings are correct, copy the running-config file to the startup-config file.

    For more information on Cisco commands, see the appropriate guide in the Cisco Nexus 9000 Series NX-OS Command Reference guides.

    Show example

    ```
    cs2# copy running-config startup-config
    [#########################################] 100% Copy complete
    ```

11. Reboot switch cs2. You can ignore the “cluster ports down” events reported on the nodes while the switch reboots.

    Show example

    ```
    cs2# reload
    This command will reboot the system. (y/n)?  [n] y
    ```

12. Verify the health of cluster ports on the cluster.

    a. Verify that e0d ports are up and healthy across all nodes in the cluster:

    ```
    network port show -role cluster
    ```

Show example

```
cluster1::*> network port show -role cluster

Node: cluster1-01

Ignore
                                                        Speed(Mbps)
Health   Health
Port      IPspace      Broadcast Domain Link MTU  Admin/Oper
Status   Status
--------- ------------ ---------------- ---- ---- -----------
-------- ------
e0a       Cluster      Cluster          up   9000  auto/10000
healthy  false
e0b       Cluster      Cluster          up   9000  auto/10000
healthy  false

Node: cluster1-02

Ignore
                                                        Speed(Mbps)
Health   Health
Port      IPspace      Broadcast Domain Link MTU  Admin/Oper
Status   Status
--------- ------------ ---------------- ---- ---- -----------
-------- ------
e0a       Cluster      Cluster          up   9000  auto/10000
healthy  false
e0b       Cluster      Cluster          up   9000  auto/10000
healthy  false

Node: cluster1-03

Ignore
                                                        Speed(Mbps)
Health   Health
Port      IPspace      Broadcast Domain Link MTU  Admin/Oper
Status   Status
--------- ------------ ---------------- ---- ---- -----------
-------- ------
e0a       Cluster      Cluster          up   9000  auto/100000
healthy false
e0d       Cluster      Cluster          up   9000  auto/100000
healthy false
```

```
Node: cluster1-04

Ignore
                                                          Speed(Mbps)
Health   Health
Port      IPspace      Broadcast Domain Link MTU  Admin/Oper
Status   Status
--------- ------------ ---------------- ---- ---- -----------
-------- ------
e0a       Cluster      Cluster          up   9000  auto/100000
healthy false
e0d       Cluster      Cluster          up   9000  auto/100000
healthy false
8 entries were displayed.
```

b. Verify the switch health from the cluster (this might not show switch cs2, since LIFs are not homed on e0d).

Show example

```
cluster1::*> network device-discovery show -protocol cdp
Node/       Local  Discovered
Protocol    Port   Device (LLDP: ChassisID)  Interface
Platform
----------- ------ ------------------------- -----------------
--------
cluster1-01/cdp
            e0a    cs1                       Ethernet1/7
N9K-C9336C
            e0d    cs2                       Ethernet1/7
N9K-C9336C
cluster01-2/cdp
            e0a    cs1                       Ethernet1/8
N9K-C9336C
            e0d    cs2                       Ethernet1/8
N9K-C9336C
cluster01-3/cdp
            e0a    cs1                       Ethernet1/1/1
N9K-C9336C
            e0b    cs2                       Ethernet1/1/1
N9K-C9336C
cluster1-04/cdp
            e0a    cs1                       Ethernet1/1/2
N9K-C9336C
            e0b    cs2                       Ethernet1/1/2
N9K-C9336C

cluster1::*> system cluster-switch show -is-monitoring-enabled
-operational true
Switch                      Type               Address
Model
--------------------------- ------------------ ----------------
-----
cs1                         cluster-network    10.233.205.90
NX9-C9336C
     Serial Number: FOCXXXXXXGD
      Is Monitored: true
            Reason: None
  Software Version: Cisco Nexus Operating System (NX-OS)
Software, Version
                    9.3(5)
    Version Source: CDP

cs2                         cluster-network    10.233.205.91
```

```
NX9-C9336C
     Serial Number: FOCXXXXXXGS
      Is Monitored: true
            Reason: None
  Software Version: Cisco Nexus Operating System (NX-OS)
Software, Version
                    9.3(5)
    Version Source: CDP

2 entries were displayed.
```

You might observe the following output on the cs1 switch console depending on the RCF version previously loaded on the switch:

```
2020 Nov 17 16:07:18 cs1 %$ VDC-1 %$ %STP-2-UNBLOCK_CONSIST_PORT:
Unblocking port port-channel1 on VLAN0092. Port consistency
restored.
2020 Nov 17 16:07:23 cs1 %$ VDC-1 %$ %STP-2-BLOCK_PVID_PEER:
Blocking port-channel1 on VLAN0001. Inconsistent peer vlan.
2020 Nov 17 16:07:23 cs1 %$ VDC-1 %$ %STP-2-BLOCK_PVID_LOCAL:
Blocking port-channel1 on VLAN0092. Inconsistent local vlan.
```

13. On cluster switch cs1, shut down the ports connected to the cluster ports of the nodes.

Show example

The following example uses the interface example output:

```
cs1(config)# interface eth1/1/1-2,eth1/7-8
cs1(config-if-range)# shutdown
```

14. Verify that the cluster LIFs have migrated to the ports hosted on switch cs2. This might take a few seconds.

```
network interface show -role cluster
```

Show example

```
cluster1::*> network interface show -role cluster
            Logical            Status     Network            Current
Current Is
Vserver     Interface          Admin/Oper Address/Mask       Node
Port    Home
----------- ------------------ ---------- ------------------
------------------- ------- ----
Cluster
            cluster1-01_clus1  up/up      169.254.3.4/23
cluster1-01         e0d     false
            cluster1-01_clus2  up/up      169.254.3.5/23
cluster1-01         e0d     true
            cluster1-02_clus1  up/up      169.254.3.8/23
cluster1-02         e0d     false
            cluster1-02_clus2  up/up      169.254.3.9/23
cluster1-02         e0d     true
            cluster1-03_clus1  up/up      169.254.1.3/23
cluster1-03         e0b     false
            cluster1-03_clus2  up/up      169.254.1.1/23
cluster1-03         e0b     true
            cluster1-04_clus1  up/up      169.254.1.6/23
cluster1-04         e0b     false
            cluster1-04_clus2  up/up      169.254.1.7/23
cluster1-04         e0b     true
8 entries were displayed.
cluster1::*>
```

15. Verify that the cluster is healthy:

```
cluster show
```

Show example

```
cluster1::*> cluster show
Node                  Health   Eligibility   Epsilon
--------------------- -------- ------------- -------
cluster1-01           true     true          false
cluster1-02           true     true          false
cluster1-03           true     true          true
cluster1-04           true     true          false
4 entries were displayed.
cluster1::*>
```

16. Repeat steps 4 to 11 on switch cs1.
17. Enable auto-revert on the cluster LIFs.

Show example

```
cluster1::*> network interface modify -vserver Cluster -lif * -auto
-revert True
```

18. Reboot switch cs1. You do this to trigger the cluster LIFs to revert to their home ports. You can ignore the “cluster ports down” events reported on the nodes while the switch reboots.

Show example

```
cs1# reload
This command will reboot the system. (y/n)?  [n] y
```

Step 3: Verify the configuration

1. Verify that the switch ports connected to the cluster ports are **up**.

```
show interface brief
```

Show example

```
cs1# show interface brief | grep up
.
.
Eth1/1/1      1       eth  access up      none
10G(D) --
Eth1/1/2      1       eth  access up      none
10G(D) --
Eth1/7        1       eth  trunk  up      none
100G(D) --
Eth1/8        1       eth  trunk  up      none
100G(D) --
.
.
```

2. Verify that the expected nodes are still connected:

```
show cdp neighbors
```

Show example

```
cs1# show cdp neighbors

Capability Codes: R - Router, T - Trans-Bridge, B - Source-Route-
Bridge
                  S - Switch, H - Host, I - IGMP, r - Repeater,
                  V - VoIP-Phone, D - Remotely-Managed-Device,
                  s - Supports-STP-Dispute

Device-ID          Local Intrfce  Hldtme Capability  Platform
Port ID
node1              Eth1/1         133    H           FAS2980
e0a
node2              Eth1/2         133    H           FAS2980
e0a
cs2                Eth1/35        175    R S I s     N9K-C9336C
Eth1/35
cs2                Eth1/36        175    R S I s     N9K-C9336C
Eth1/36

Total entries displayed: 4
```

3. Verify that the cluster nodes are in their correct cluster VLANs using the following commands:

```
show vlan brief

show interface trunk
```

Show example

```
cs1# show vlan brief

VLAN Name                             Status    Ports
---- -------------------------------- ---------
-------------------------------
1    default                          active    Po1, Eth1/1, Eth1/2,
Eth1/3
                                               Eth1/4, Eth1/5,
Eth1/6, Eth1/7
                                               Eth1/8, Eth1/35,
Eth1/36
                                               Eth1/9/1, Eth1/9/2,
Eth1/9/3
                                               Eth1/9/4, Eth1/10/1,
Eth1/10/2
                                               Eth1/10/3, Eth1/10/4
17   VLAN0017                         active    Eth1/1, Eth1/2,
Eth1/3, Eth1/4
                                               Eth1/5, Eth1/6,
Eth1/7, Eth1/8
                                               Eth1/9/1, Eth1/9/2,
Eth1/9/3
                                               Eth1/9/4, Eth1/10/1,
Eth1/10/2
                                               Eth1/10/3, Eth1/10/4
18   VLAN0018                         active    Eth1/1, Eth1/2,
Eth1/3, Eth1/4
                                               Eth1/5, Eth1/6,
Eth1/7, Eth1/8
                                               Eth1/9/1, Eth1/9/2,
Eth1/9/3
                                               Eth1/9/4, Eth1/10/1,
Eth1/10/2
                                               Eth1/10/3, Eth1/10/4
31   VLAN0031                         active    Eth1/11, Eth1/12,
Eth1/13
                                               Eth1/14, Eth1/15,
Eth1/16
                                               Eth1/17, Eth1/18,
Eth1/19
                                               Eth1/20, Eth1/21,
Eth1/22
32   VLAN0032                         active    Eth1/23, Eth1/24,
Eth1/25
```

```
                                                   Eth1/26, Eth1/27,
Eth1/28
                                                   Eth1/29, Eth1/30,
Eth1/31
                                                   Eth1/32, Eth1/33,
Eth1/34
33   VLAN0033                          active    Eth1/11, Eth1/12,
Eth1/13
                                                   Eth1/14, Eth1/15,
Eth1/16
                                                   Eth1/17, Eth1/18,
Eth1/19
                                                   Eth1/20, Eth1/21,
Eth1/22
34   VLAN0034                          active    Eth1/23, Eth1/24,
Eth1/25
                                                   Eth1/26, Eth1/27,
Eth1/28
                                                   Eth1/29, Eth1/30,
Eth1/31
                                                   Eth1/32, Eth1/33,
Eth1/34

cs1# show interface trunk

-----------------------------------------------------
Port          Native  Status        Port
              Vlan                  Channel
-----------------------------------------------------
Eth1/1        1       trunking      --
Eth1/2        1       trunking      --
Eth1/3        1       trunking      --
Eth1/4        1       trunking      --
Eth1/5        1       trunking      --
Eth1/6        1       trunking      --
Eth1/7        1       trunking      --
Eth1/8        1       trunking      --
Eth1/9/1      1       trunking      --
Eth1/9/2      1       trunking      --
Eth1/9/3      1       trunking      --
Eth1/9/4      1       trunking      --
Eth1/10/1     1       trunking      --
Eth1/10/2     1       trunking      --
Eth1/10/3     1       trunking      --
Eth1/10/4     1       trunking      --
Eth1/11       33      trunking      --
```

```
Eth1/12       33      trunking      --
Eth1/13       33      trunking      --
Eth1/14       33      trunking      --
Eth1/15       33      trunking      --
Eth1/16       33      trunking      --
Eth1/17       33      trunking      --
Eth1/18       33      trunking      --
Eth1/19       33      trunking      --
Eth1/20       33      trunking      --
Eth1/21       33      trunking      --
Eth1/22       33      trunking      --
Eth1/23       34      trunking      --
Eth1/24       34      trunking      --
Eth1/25       34      trunking      --
Eth1/26       34      trunking      --
Eth1/27       34      trunking      --
Eth1/28       34      trunking      --
Eth1/29       34      trunking      --
Eth1/30       34      trunking      --
Eth1/31       34      trunking      --
Eth1/32       34      trunking      --
Eth1/33       34      trunking      --
Eth1/34       34      trunking      --
Eth1/35       1       trnk-bndl     Po1
Eth1/36       1       trnk-bndl     Po1
Po1           1       trunking      --

-------------------------------------------------------
Port          Vlans Allowed on Trunk
-------------------------------------------------------
Eth1/1        1,17-18
Eth1/2        1,17-18
Eth1/3        1,17-18
Eth1/4        1,17-18
Eth1/5        1,17-18
Eth1/6        1,17-18
Eth1/7        1,17-18
Eth1/8        1,17-18
Eth1/9/1      1,17-18
Eth1/9/2      1,17-18
Eth1/9/3      1,17-18
Eth1/9/4      1,17-18
Eth1/10/1     1,17-18
Eth1/10/2     1,17-18
Eth1/10/3     1,17-18
Eth1/10/4     1,17-18
```

```
Eth1/11        31,33
Eth1/12        31,33
Eth1/13        31,33
Eth1/14        31,33
Eth1/15        31,33
Eth1/16        31,33
Eth1/17        31,33
Eth1/18        31,33
Eth1/19        31,33
Eth1/20        31,33
Eth1/21        31,33
Eth1/22        31,33
Eth1/23        32,34
Eth1/24        32,34
Eth1/25        32,34
Eth1/26        32,34
Eth1/27        32,34
Eth1/28        32,34
Eth1/29        32,34
Eth1/30        32,34
Eth1/31        32,34
Eth1/32        32,34
Eth1/33        32,34
Eth1/34        32,34
Eth1/35        1
Eth1/36        1
Po1            1
..
..
..
..
..
```

For specific port and VLAN usage details, refer to the banner and important notes section in your RCF.

4. Verify that the ISL between cs1 and cs2 is functional:

```
show port-channel summary
```

Show example

```
cs1# show port-channel summary
Flags:  D - Down        P - Up in port-channel (members)
        I - Individual  H - Hot-standby (LACP only)
        s - Suspended   r - Module-removed
        b - BFD Session Wait
        S - Switched    R - Routed
        U - Up (port-channel)
        p - Up in delay-lacp mode (member)
        M - Not in use. Min-links not met
--------------------------------------------------------------------
------------
Group Port-       Type     Protocol  Member Ports      Channel
--------------------------------------------------------------------
------------
1     Po1(SU)     Eth      LACP      Eth1/35(P)        Eth1/36(P)
cs1#
```

5. Verify that the cluster LIFs have reverted to their home port:

```
network interface show -role cluster
```

Show example

```
cluster1::*> network interface show -role cluster
            Logical            Status     Network            Current
Current Is
Vserver     Interface          Admin/Oper Address/Mask       Node
Port    Home
----------- ------------------ ---------- ------------------
------------------- ------- ----
Cluster
            cluster1-01_clus1  up/up      169.254.3.4/23
cluster1-01         e0d     true
            cluster1-01_clus2  up/up      169.254.3.5/23
cluster1-01         e0d     true
            cluster1-02_clus1  up/up      169.254.3.8/23
cluster1-02         e0d     true
            cluster1-02_clus2  up/up      169.254.3.9/23
cluster1-02         e0d     true
            cluster1-03_clus1  up/up      169.254.1.3/23
cluster1-03         e0b     true
            cluster1-03_clus2  up/up      169.254.1.1/23
cluster1-03         e0b     true
            cluster1-04_clus1  up/up      169.254.1.6/23
cluster1-04         e0b     true
            cluster1-04_clus2  up/up      169.254.1.7/23
cluster1-04         e0b     true
8 entries were displayed.
cluster1::*>
```

6. Verify that the cluster is healthy:

```
cluster show
```

Show example

```
cluster1::*> cluster show
Node                  Health  Eligibility   Epsilon
--------------------- ------- ------------- -------
cluster1-01           true    true          false
cluster1-02           true    true          false
cluster1-03           true    true          true
cluster1-04           true    true          false
4 entries were displayed.
cluster1::*>
```

7. Ping the remote cluster interfaces to verify connectivity:

```
cluster ping-cluster -node local
```

Show example

```
cluster1::*> cluster ping-cluster -node local
Host is cluster1-03
Getting addresses from network interface table...
Cluster cluster1-03_clus1 169.254.1.3 cluster1-03 e0a
Cluster cluster1-03_clus2 169.254.1.1 cluster1-03 e0b
Cluster cluster1-04_clus1 169.254.1.6 cluster1-04 e0a
Cluster cluster1-04_clus2 169.254.1.7 cluster1-04 e0b
Cluster cluster1-01_clus1 169.254.3.4 cluster1-01 e0a
Cluster cluster1-01_clus2 169.254.3.5 cluster1-01 e0d
Cluster cluster1-02_clus1 169.254.3.8 cluster1-02 e0a
Cluster cluster1-02_clus2 169.254.3.9 cluster1-02 e0d
Local = 169.254.1.3 169.254.1.1
Remote = 169.254.1.6 169.254.1.7 169.254.3.4 169.254.3.5 169.254.3.8
169.254.3.9
Cluster Vserver Id = 4294967293
Ping status:
............
Basic connectivity succeeds on 12 path(s)
Basic connectivity fails on 0 path(s)
................................................
Detected 9000 byte MTU on 12 path(s):
    Local 169.254.1.3 to Remote 169.254.1.6
    Local 169.254.1.3 to Remote 169.254.1.7
    Local 169.254.1.3 to Remote 169.254.3.4
    Local 169.254.1.3 to Remote 169.254.3.5
    Local 169.254.1.3 to Remote 169.254.3.8
    Local 169.254.1.3 to Remote 169.254.3.9
    Local 169.254.1.1 to Remote 169.254.1.6
    Local 169.254.1.1 to Remote 169.254.1.7
    Local 169.254.1.1 to Remote 169.254.3.4
    Local 169.254.1.1 to Remote 169.254.3.5
    Local 169.254.1.1 to Remote 169.254.3.8
    Local 169.254.1.1 to Remote 169.254.3.9
Larger than PMTU communication succeeds on 12 path(s)
RPC status:
6 paths up, 0 paths down (tcp check)
6 paths up, 0 paths down (udp check)
```

Ethernet Switch Health Monitoring log collection

You can use the log collection feature to collect switch-related log files in ONTAP.

+
The Ethernet switch health monitor (CSHM) is responsible for ensuring the operational health of Cluster and Storage network switches and collecting switch logs for debugging purposes. This procedure guides you through the process of setting up and starting the collection of detailed **Support** logs from the switch and starts an hourly collection of **Periodic** data that is collected by AutoSupport.

Before you begin

- Verify that you have set up your environment using the 9336C-FX2 cluster switch **CLI**.
- Switch health monitoring must be enabled for the switch. Verify this by ensuring the `Is Monitored:` field is set to **true** in the output of the `system switch ethernet show` command.

Steps

1. Create a password for the Ethernet switch health monitor log collection feature:

   `system switch ethernet log setup-password`

   Show example

   ```
   cluster1::*> system switch ethernet log setup-password
   Enter the switch name: <return>
   The switch name entered is not recognized.
   Choose from the following list:
   cs1
   cs2

   cluster1::*> system switch ethernet log setup-password

   Enter the switch name: cs1
   Would you like to specify a user other than admin for log
   collection? {y|n}: n

   Enter the password: <enter switch password>
   Enter the password again: <enter switch password>

   cluster1::*> system switch ethernet log setup-password

   Enter the switch name: cs2
   Would you like to specify a user other than admin for log
   collection? {y|n}: n

   Enter the password: <enter switch password>
   Enter the password again: <enter switch password>
   ```

2. To start log collection, run the following command, replacing DEVICE with the switch used in the previous command. This starts both types of log collection: the detailed **Support** logs and an hourly collection of **Periodic** data.

```
system switch ethernet log modify -device <switch-name> -log-request true
```

Show example

```
cluster1::*> system switch ethernet log modify -device cs1 -log
-request true

Do you want to modify the cluster switch log collection
configuration? {y|n}: [n] y

Enabling cluster switch log collection.

cluster1::*> system switch ethernet log modify -device cs2 -log
-request true

Do you want to modify the cluster switch log collection
configuration? {y|n}: [n] y

Enabling cluster switch log collection.
```

Wait for 10 minutes and then check that the log collection completes:

```
system switch ethernet log show
```

> If any of these commands return an error or if the log collection does not complete, contact NetApp support.

Troubleshooting

If you encounter any of the following error statuses reported by the log collection feature (visible in the output of `system switch ethernet log show`), try the corresponding debug steps:

Log collection error status	Resolution
RSA keys not present	Regenerate ONTAP SSH keys. Contact NetApp support.
switch password error	Verify credentials, test SSH connectivity, and regenerate ONTAP SSH keys. Review the switch documentation or contact NetApp support for instructions.
ECDSA keys not present for FIPS	If FIPS mode is enabled, ECDSA keys need to be generated on the switch before retrying.
pre-existing log found	Remove the previous log collection file on the switch.

switch dump log error	Ensure the switch user has log collection permissions. Refer to the prerequisites above.

Configure SNMPv3

Follow this procedure to configure SNMPv3, which supports Ethernet switch health monitoring (CSHM).

About this task

The following commands configure an SNMPv3 username on Cisco 9336C-FX2 switches:

- For **no authentication**:
  `snmp-server user SNMPv3_USER NoAuth`
- For **MD5/SHA authentication**:
  `snmp-server user SNMPv3_USER auth [md5|sha] AUTH-PASSWORD`
- For **MD5/SHA authentication with AES/DES encryption**:
  `snmp-server user SNMPv3_USER AuthEncrypt auth [md5|sha] AUTH-PASSWORD priv aes-128 PRIV-PASSWORD`

The following command configures an SNMPv3 username on the ONTAP side:
`cluster1::*> security login create -user-or-group-name SNMPv3_USER -application snmp -authentication-method usm -remote-switch-ipaddress ADDRESS`

The following command establishes the SNMPv3 username with CSHM:
`cluster1::*> system switch ethernet modify -device DEVICE -snmp-version SNMPv3 -community-or-username SNMPv3_USER`

Steps

1. Set up the SNMPv3 user on the switch to use authentication and encryption:

   ```
   show snmp user
   ```

Show example

```
(sw1)(Config)# snmp-server user SNMPv3User auth md5 <auth_password>
priv aes-128 <priv_password>

(sw1)(Config)# show snmp user

-----------------------------------------------------------------------
---------
                              SNMP USERS
-----------------------------------------------------------------------
---------

User              Auth            Priv(enforce)   Groups
acl_filter
----------------- --------------- --------------- ---------------
-----------
admin             md5             des(no)         network-admin
SNMPv3User        md5             aes-128(no)     network-operator

-----------------------------------------------------------------------
---------
     NOTIFICATION TARGET USERS (configured  for sending V3 Inform)
-----------------------------------------------------------------------
---------

User              Auth                Priv
----------------- ------------------- ------------

(sw1)(Config)#
```

2. Set up the SNMPv3 user on the ONTAP side:

```
security login create -user-or-group-name <username> -application snmp
-authentication-method usm -remote-switch-ipaddress 10.231.80.212
```

Show example

```
cluster1::*> system switch ethernet modify -device "sw1
(b8:59:9f:09:7c:22)" -is-monitoring-enabled-admin true

cluster1::*> security login create -user-or-group-name <username>
-application snmp -authentication-method usm -remote-switch
-ipaddress 10.231.80.212

Enter the authoritative entity's EngineID [remote EngineID]:

Which authentication protocol do you want to choose (none, md5, sha,
sha2-256)
[none]: md5

Enter the authentication protocol password (minimum 8 characters
long):

Enter the authentication protocol password again:

Which privacy protocol do you want to choose (none, des, aes128)
[none]: aes128

Enter privacy protocol password (minimum 8 characters long):
Enter privacy protocol password again:
```

3. Configure CSHM to monitor with the new SNMPv3 user:

```
system switch ethernet show-all -device "sw1" -instance
```

Show example

```
cluster1::*> system switch ethernet show-all -device "sw1" -instance

                                   Device Name: sw1
                                    IP Address: 10.231.80.212
                                  SNMP Version: SNMPv2c
                                 Is Discovered: true
   SNMPv2c Community String or SNMPv3 Username: cshm1!
                                  Model Number: N9K-C9336C-FX2
                                Switch Network: cluster-network
                             Software Version: Cisco Nexus
Operating System (NX-OS) Software, Version 9.3(7)
                      Reason For Not Monitoring: None  <---- displays
when SNMP settings are valid
                       Source Of Switch Version: CDP/ISDP
                                 Is Monitored ?: true
                   Serial Number of the Device: QTFCU3826001C
                                   RCF Version: v1.8X2 for
Cluster/HA/RDMA

cluster1::*>
cluster1::*> system switch ethernet modify -device "sw1" -snmp
-version SNMPv3 -community-or-username <username>
cluster1::*>
```

4. Verify that the serial number to be queried with the newly created SNMPv3 user is the same as detailed in the previous step after the CSHM polling period has completed.

   ```
   system switch ethernet polling-interval show
   ```

Show example

```
cluster1::*> system switch ethernet polling-interval show
         Polling Interval (in minutes): 5

cluster1::*> system switch ethernet show-all -device "sw1" -instance

                                  Device Name: sw1
                                   IP Address: 10.231.80.212
                                 SNMP Version: SNMPv3
                                Is Discovered: true
   SNMPv2c Community String or SNMPv3 Username: SNMPv3User
                                  Model Number: N9K-C9336C-FX2
                                Switch Network: cluster-network
                             Software Version: Cisco Nexus
Operating System (NX-OS) Software, Version 9.3(7)
                     Reason For Not Monitoring: None  <---- displays
when SNMP settings are valid
                      Source Of Switch Version: CDP/ISDP
                                Is Monitored ?: true
                   Serial Number of the Device: QTFCU3826001C
                                   RCF Version: v1.8X2 for
Cluster/HA/RDMA

cluster1::*>
```

Migrate switches

Migrate from a switchless cluster with direct-attached storage

You can migrate from a switchless cluster with direct-attached storage by adding two new shared switches.

The procedure you use depends on whether you have two dedicated cluster-network ports on each controller or a single cluster port on each controller. The process documented works for all nodes using optical or Twinax ports, but is not supported on this switch if nodes are using onboard 10Gb BASE-T RJ45 ports for the cluster-network ports.

Most systems require two dedicated cluster-network ports on each controller. See Cisco Ethernet Switches for more information.

If you have an existing two-node switchless cluster environment, you can migrate to a two-node switched cluster environment using Cisco Nexus 9336C-FX2 switches to enable you to scale beyond two nodes in the cluster.

Review requirements

Ensure that:

- For the two-node switchless configuration:
  - The two-node switchless configuration is properly set up and functioning.
  - The nodes are running ONTAP 9.8 and later.
  - All cluster ports are in the **up** state.
  - All cluster logical interfaces (LIFs) are in the **up** state and on their **home** ports.
- For the Cisco Nexus 9336C-FX2 switch configuration:
  - Both switches have management network connectivity.
  - There is console access to the cluster switches.
  - Nexus 9336C-FX2 node-to-node switch and switch-to-switch connections use Twinax or fiber cables.
  - The NetApp Hardware Universe contains more information about cabling.
  - Inter-Switch Link (ISL) cables are connected to ports 1/35 and 1/36 on both 9336C-FX2 switches.
- Initial customization of the 9336C-FX2 switches are completed. So that the:
  - 9336C-FX2 switches are running the latest version of software
  - Reference Configuration Files (RCFs) have been applied to the switches
  - Any site customization, such as SMTP, SNMP, and SSH is configured on the new switches.

Migrate the switches

About the examples

The examples in this procedure use the following cluster switch and node nomenclature:

- The names of the 9336C-FX2 switches are *cs1* and *cs2*.
- The names of the cluster SVMs are *node1* and *node2*.
- The names of the LIFs are *node1_clus1* and *node1_clus2* on node 1, and *node2_clus1* and *node2_clus2* on node 2 respectively.
- The cluster1::*> prompt indicates the name of the cluster.
- The cluster ports used in this procedure are *e3a* and *e3b*, as per the AFF A400 controller. The Hardware Universe contains the latest information about the actual cluster ports for your platforms.

Step 1: Migrate from a switchless cluster with direct-attached

1. If AutoSupport is enabled on this cluster, suppress automatic case creation by invoking an AutoSupport message: `system node autosupport invoke -node * -type all -message MAINT=xh`.

   where x is the duration of the maintenance window in hours.

   > The AutoSupport message notifies technical support of this maintenance task so that automatic case creation is suppressed during the maintenance window.

2. Change the privilege level to advanced, entering y when prompted to continue:

```
set -privilege advanced
```

The advanced prompt (*>) appears.

3. Disable all node-facing ports (not ISL ports) on both the new cluster switches cs1 and cs2. You must not disable the ISL ports.

   Show example

   The following example shows that node-facing ports 1 through 34 are disabled on switch cs1:

   ```
   cs1# config
   Enter configuration commands, one per line. End with CNTL/Z.
   cs1(config)# interface e1/1-34
   cs1(config-if-range)# shutdown
   ```

4. Verify that the ISL and the physical ports on the ISL between the two 9336C-FX2 switches cs1 and cs2 are up on ports 1/35 and 1/36:

   ```
   show port-channel summary
   ```

Show example

The following example shows that the ISL ports are up on switch cs1:

```
cs1# show port-channel summary
Flags:  D - Down        P - Up in port-channel (members)
        I - Individual  H - Hot-standby (LACP only)
        s - Suspended   r - Module-removed
        b - BFD Session Wait
        S - Switched    R - Routed
        U - Up (port-channel)
        p - Up in delay-lacp mode (member)
        M - Not in use. Min-links not met
--------------------------------------------------------------------
------------
Group Port-       Type     Protocol  Member Ports
      Channel
--------------------------------------------------------------------
------------
1     Po1(SU)     Eth      LACP      Eth1/35(P)   Eth1/36(P)
```

The following example shows that the ISL ports are up on switch cs2:

```
       cs2# show port-channel summary
        Flags:  D - Down        P - Up in port-channel (members)
        I - Individual  H - Hot-standby (LACP only)
        s - Suspended   r - Module-removed
        b - BFD Session Wait
        S - Switched    R - Routed
        U - Up (port-channel)
        p - Up in delay-lacp mode (member)
        M - Not in use. Min-links not met
--------------------------------------------------------------------
------------
Group Port-       Type     Protocol  Member Ports
      Channel
--------------------------------------------------------------------
------------
1     Po1(SU)     Eth      LACP      Eth1/35(P)   Eth1/36(P)
```

5. Display the list of neighboring devices:

```
show cdp neighbors
```

This command provides information about the devices that are connected to the system.

Show example

The following example lists the neighboring devices on switch cs1:

```
cs1# show cdp neighbors
Capability Codes: R - Router, T - Trans-Bridge, B - Source-Route-
Bridge
                  S - Switch, H - Host, I - IGMP, r - Repeater,
                  V - VoIP-Phone, D - Remotely-Managed-Device,
                  s - Supports-STP-Dispute
Device-ID          Local Intrfce  Hldtme Capability  Platform
Port ID
cs2                Eth1/35        175    R S I s     N9K-C9336C
Eth1/35
cs2                Eth1/36        175    R S I s     N9K-C9336C
Eth1/36
Total entries displayed: 2
```

The following example lists the neighboring devices on switch cs2:

```
cs2# show cdp neighbors
Capability Codes: R - Router, T - Trans-Bridge, B - Source-Route-
Bridge
                  S - Switch, H - Host, I - IGMP, r - Repeater,
                  V - VoIP-Phone, D - Remotely-Managed-Device,
                  s - Supports-STP-Dispute
Device-ID          Local Intrfce  Hldtme Capability  Platform
Port ID
cs1                Eth1/35        177    R S I s     N9K-C9336C
Eth1/35
cs1           )    Eth1/36        177    R S I s     N9K-C9336C
Eth1/36

Total entries displayed: 2
```

6. Verify that all cluster ports are up:

```
network port show - ipspace Cluster
```

Each port should display up for Link and healthy for Health Status.

Show example

```
cluster1::*> network port show -ipspace Cluster

Node: node1
                                                        Speed(Mbps)
Health
Port      IPspace      Broadcast Domain Link MTU  Admin/Oper
Status
--------- ------------ ---------------- ---- ---- ------------
---------
e3a       Cluster      Cluster          up   9000  auto/100000
healthy
e3b       Cluster      Cluster          up   9000  auto/100000
healthy

Node: node2
                                                        Speed(Mbps)
Health
Port      IPspace      Broadcast Domain Link MTU  Admin/Oper
Status
--------- ------------ ---------------- ---- ---- ------------
---------
e3a       Cluster      Cluster          up   9000  auto/100000
healthy
e3b       Cluster      Cluster          up   9000  auto/100000
healthy
4 entries were displayed.
```

7. Verify that all cluster LIFs are up and operational:

   `network interface show - vserver Cluster`

   Each cluster LIF should display true for `Is Home` and have a Status Admin/Oper of up/up.

Show example

```
cluster1::*> network interface show -vserver Cluster
            Logical     Status     Network            Current
Current Is
Vserver     Interface   Admin/Oper Address/Mask       Node
Port    Home
----------- ---------- ---------- ------------------ -------------
------- -----
Cluster
            node1_clus1  up/up    169.254.209.69/16  node1
e3a     true
            node1_clus2  up/up    169.254.49.125/16  node1
e3b     true
            node2_clus1  up/up    169.254.47.194/16  node2
e3a     true
            node2_clus2  up/up    169.254.19.183/16  node2
e3b     true
4 entries were displayed.
```

8. Verify that auto-revert is enabled on all cluster LIFs:

```
network interface show - vserver Cluster -fields auto-revert
```

Show example

```
cluster1::*> network interface show -vserver Cluster -fields auto-
revert
       Logical
Vserver   Interface     Auto-revert
--------- ------------- ------------
Cluster
          node1_clus1   true
          node1_clus2   true
          node2_clus1   true
          node2_clus2   true
4 entries were displayed.
```

9. Disconnect the cable from cluster port e3a on node1, and then connect e3a to port 1 on cluster switch cs1, using the appropriate cabling supported by the 9336C-FX2 switches.

   The NetApp Hardware Universe contains more information about cabling.

10. Disconnect the cable from cluster port e3a on node2, and then connect e3a to port 2 on cluster switch cs1, using the appropriate cabling supported by the 9336C-FX2 switches.
11. Enable all node-facing ports on cluster switch cs1.

Show example

The following example shows that ports 1/1 through 1/34 are enabled on switch cs1:

```
cs1# config
Enter configuration commands, one per line. End with CNTL/Z.
cs1(config)# interface e1/1-34
cs1(config-if-range)# no shutdown
```

12. Verify that all cluster LIFs are **up**, operational, and display as true for `Is Home`:

```
network interface show - vserver Cluster
```

Show example

The following example shows that all the LIFs are **up** on node1 and node2 and that `Is Home` results are **true**:

```
cluster1::*> network interface show -vserver Cluster
          Logical      Status     Network            Current
Current Is
Vserver   Interface    Admin/Oper Address/Mask       Node
Port    Home
--------- ------------ ---------- ------------------ -----------
------- ----
Cluster
          node1_clus1  up/up      169.254.209.69/16  node1       e3a
true
          node1_clus2  up/up      169.254.49.125/16  node1       e3b
true
          node2_clus1  up/up      169.254.47.194/16  node2       e3a
true
          node2_clus2  up/up      169.254.19.183/16  node2       e3b
true
4 entries were displayed.
```

13. Display information about the status of the nodes in the cluster:

```
cluster show
```

Show example

The following example displays information about the health and eligibility of the nodes in the cluster:

```
cluster1::*> cluster show
Node                  Health  Eligibility   Epsilon
-------------------- ------- ------------  ------------
node1                 true    true          false
node2                 true    true          false
2 entries were displayed.
```

14. Disconnect the cable from cluster port e3b on node1, and then connect e3b to port 1 on cluster switch cs2, using the appropriate cabling supported by the 9336C-FX2 switches.
15. Disconnect the cable from cluster port e3b on node2, and then connect e3b to port 2 on cluster switch cs2, using the appropriate cabling supported by the 9336C-FX2 switches.
16. Enable all node-facing ports on cluster switch cs2.

Show example

The following example shows that ports 1/1 through 1/34 are enabled on switch cs2:

```
cs2# config
Enter configuration commands, one per line. End with CNTL/Z.
cs2(config)# interface e1/1-34
cs2(config-if-range)# no shutdown
```

17. Verify that all cluster ports are up:

```
network port show - ipspace Cluster
```

Show example

The following example shows that all the cluster ports are up on node1 and node2:

```
cluster1::*> network port show -ipspace Cluster

Node: node1

Ignore
                                                      Speed(Mbps)
Health   Health
Port      IPspace      Broadcast Domain Link MTU  Admin/Oper
Status   Status
--------- ------------ ---------------- ---- ---- ------------
-------- ------
e3a       Cluster      Cluster          up   9000  auto/100000
healthy  false
e3b       Cluster      Cluster          up   9000  auto/100000
healthy  false

Node: node2

Ignore
                                                      Speed(Mbps)
Health   Health
Port      IPspace      Broadcast Domain Link MTU  Admin/Oper
Status   Status
--------- ------------ ---------------- ---- ---- ------------
-------- ------
e3a       Cluster      Cluster          up   9000  auto/100000
healthy  false
e3b       Cluster      Cluster          up   9000  auto/100000
healthy  false
4 entries were displayed.
```

18. Verify that all interfaces display true for `Is Home`:

```
network interface show - vserver Cluster
```

This might take several minutes to complete.

Show example

The following example shows that all LIFs are **up** on node1 and node2 and that `Is Home` results are true:

```
cluster1::*> network interface show -vserver Cluster
          Logical      Status     Network            Current
Current Is
Vserver   Interface    Admin/Oper Address/Mask       Node       Port
Home
--------- ------------ ---------- ------------------ ----------
------- ----
Cluster
          node1_clus1  up/up      169.254.209.69/16  node1      e3a
true
          node1_clus2  up/up      169.254.49.125/16  node1      e3b
true
          node2_clus1  up/up      169.254.47.194/16  node2      e3a
true
          node2_clus2  up/up      169.254.19.183/16  node2      e3b
true
4 entries were displayed.
```

19. Verify that both nodes each have one connection to each switch:

```
show cdp neighbors
```

Show example

The following example shows the appropriate results for both switches:

```
cs1# show cdp neighbors
Capability Codes: R - Router, T - Trans-Bridge, B - Source-Route-
Bridge
                  S - Switch, H - Host, I - IGMP, r - Repeater,
                  V - VoIP-Phone, D - Remotely-Managed-Device,
                  s - Supports-STP-Dispute
Device-ID          Local Intrfce  Hldtme Capability  Platform
Port ID
node1              Eth1/1         133    H           AFFA400
e3a
node2              Eth1/2         133    H           AFFA400
e3a
cs2                Eth1/35        175    R S I s     N9K-C9336C
Eth1/35
cs2                Eth1/36        175    R S I s     N9K-C9336C
Eth1/36
Total entries displayed: 4
cs2# show cdp neighbors
Capability Codes: R - Router, T - Trans-Bridge, B - Source-Route-
Bridge
                  S - Switch, H - Host, I - IGMP, r - Repeater,
                  V - VoIP-Phone, D - Remotely-Managed-Device,
                  s - Supports-STP-Dispute
Device-ID          Local Intrfce  Hldtme Capability  Platform
Port ID
node1              Eth1/1         133    H           AFFA400
e3b
node2              Eth1/2         133    H           AFFA400
e3b
cs1                Eth1/35        175    R S I s     N9K-C9336C
Eth1/35
cs1                Eth1/36        175    R S I s     N9K-C9336C
Eth1/36
Total entries displayed: 4
```

20. Display information about the discovered network devices in your cluster:

```
network device-discovery show -protocol cdp
```

Show example

```
cluster1::*> network device-discovery show -protocol cdp
Node/       Local  Discovered
Protocol    Port   Device (LLDP: ChassisID)  Interface
Platform
----------- ------ ------------------------- ----------------
----------------
node2       /cdp
            e3a    cs1                       0/2               N9K-
C9336C
            e3b    cs2                       0/2               N9K-
C9336C

node1       /cdp
            e3a    cs1                       0/1               N9K-
C9336C
            e3b    cs2                       0/1               N9K-
C9336C
4 entries were displayed.
```

21. Verify that the storage configuration of HA pair 1 (and HA pair 2) is correct and error free:

```
system switch ethernet show
```

Show example

```
storage::*> system switch ethernet show
Switch                    Type                    Address
Model
------------------------- ----------------------- ---------------
----------
sh1
                          storage-network         172.17.227.5
C9336C

       Serial Number: FOC221206C2
        Is Monitored: true
              Reason: None
    Software Version: Cisco Nexus Operating System (NX-OS) Software,
Version
                      9.3(5)
      Version Source: CDP
sh2
                          storage-network         172.17.227.6
C9336C
       Serial Number: FOC220443LZ
        Is Monitored: true
              Reason: None
    Software Version: Cisco Nexus Operating System (NX-OS) Software,
Version
                      9.3(5)
      Version Source: CDP
2 entries were displayed.
storage::*>
```

22. Verify that the settings are disabled:

```
network options switchless-cluster show
```

> It might take several minutes for the command to complete. Wait for the '3-minute lifetime to expire' announcement.

The `false` output in the following example shows that the configuration settings are disabled:

Show example

```
cluster1::*> network options switchless-cluster show
Enable Switchless Cluster: false
```

23. Verify the status of the node members in the cluster:

```
cluster show
```

Show example

The following example shows information about the health and eligibility of the nodes in the cluster:

```
cluster1::*> cluster show
Node                 Health  Eligibility   Epsilon
-------------------- ------- ------------  --------
node1                true    true          false
node2                true    true          false
```

24. Ensure that the cluster network has full connectivity:

```
cluster ping-cluster -node node-name
```

Show example

```
cluster1::*> cluster ping-cluster -node node2
Host is node2
Getting addresses from network interface table...
Cluster node1_clus1 169.254.209.69 node1 e3a
Cluster node1_clus2 169.254.49.125 node1 e3b
Cluster node2_clus1 169.254.47.194 node2 e3a
Cluster node2_clus2 169.254.19.183 node2 e3b
Local = 169.254.47.194 169.254.19.183
Remote = 169.254.209.69 169.254.49.125
Cluster Vserver Id = 4294967293
Ping status:
....
Basic connectivity succeeds on 4 path(s)
Basic connectivity fails on 0 path(s)
................
Detected 9000 byte MTU on 4 path(s):
Local 169.254.47.194 to Remote 169.254.209.69
Local 169.254.47.194 to Remote 169.254.49.125
Local 169.254.19.183 to Remote 169.254.209.69
Local 169.254.19.183 to Remote 169.254.49.125
Larger than PMTU communication succeeds on 4 path(s)
RPC status:
2 paths up, 0 paths down (tcp check)
2 paths up, 0 paths down (udp check)
```

25. Change the privilege level back to admin:

```
set -privilege admin
```

26. Enable the Ethernet switch health monitor log collection feature for collecting switch-related log files, using the commands:
    - `system switch ethernet log setup-password`
    - `system switch ethernet log enable-collection`

Show example

```
cluster1::*> system switch ethernet log setup-password
Enter the switch name: <return>
The switch name entered is not recognized.

Choose from the following list:
cs1
cs2
cluster1::*> system switch ethernet log setup-password
Enter the switch name: cs1
RSA key fingerprint is
e5:8b:c6:dc:e2:18:18:09:36:63:d9:63:dd:03:d9:cc
Do you want to continue? {y|n}::[n] y
Enter the password: <enter switch password>
Enter the password again: <enter switch password>
cluster1::*> system switch ethernet log setup-password
Enter the switch name: cs2
RSA key fingerprint is
57:49:86:a1:b9:80:6a:61:9a:86:8e:3c:e3:b7:1f:b1
Do you want to continue? {y|n}:: [n] y
Enter the password: <enter switch password>
Enter the password again: <enter switch password>
cluster1::*> system  switch ethernet log enable-collection
Do you want to enable cluster log collection for all nodes in the
cluster? {y|n}: [n] y
Enabling cluster switch log collection.
cluster1::*>
```

Step 2: Set up the shared switch

The examples in this procedure use the following switch and node nomenclature:

- The names of the two shared switches are *sh1* and *sh2*.
- The nodes are *node1* and *node2*.

> The procedure requires the use of both ONTAP commands and Cisco Nexus 9000 Series Switches commands, ONTAP commands are used unless otherwise indicated.

1. Verify that the storage configuration of HA pair 1 (and HA pair 2) is correct and error free:

   ```
   system switch ethernet show
   ```

Show example

```
storage::*> system switch ethernet show
Switch                    Type                    Address
Model
------------------------- ---------------------  ---------------
-------
sh1
                          storage-network        172.17.227.5
C9336C

      Serial Number: FOC221206C2
       Is Monitored: true
             Reason: None
   Software Version: Cisco Nexus Operating System (NX-OS) Software,
Version
                     9.3(5)
     Version Source: CDP
sh2
                          storage-network        172.17.227.6
C9336C
       Serial Number: FOC220443LZ
        Is Monitored: true
              Reason: None
    Software Version: Cisco Nexus Operating System (NX-OS) Software,
Version
                      9.3(5)
      Version Source: CDP
2 entries were displayed.
storage::*>
```

2. Verify that the storage node ports are healthy and operational:

```
storage port show -port-type ENET
```

Show example

```
storage::*> storage port show -port-type ENET
                                     Speed
VLAN
Node    Port    Type    Mode       (Gb/s)      State      Status
ID
------- ------- ------- ---------- ----------- ---------- ----------
-----
node1
        e0c     ENET   storage          100      enabled  online
30
        e0d     ENET   storage          100      enabled  online
30
        e5a     ENET   storage          100      enabled  online
30
        e5b     ENET   storage          100      enabled  online
30

node2
        e0c     ENET  storage           100      enabled  online
30
        e0d     ENET  storage           100      enabled  online
30
        e5a     ENET  storage           100      enabled  online
30
        e5b     ENET  storage           100      enabled  online
30
```

3. Move the HA pair 1, NSM224 path A ports to sh1 port range 11-22.
4. Install a cable from HA pair 1, node1, path A to sh1 port range 11-22. For example, the path A storage port on an AFF A400 is e0c.
5. Install a cable from HA pair 1, node2, path A to sh1 port range 11-22.
6. Verify that the node ports are healthy and operational:

   ```
   storage port show -port-type ENET
   ```

Show example

```
storage::*> storage port show -port-type ENET
                                     Speed
VLAN
Node    Port    Type    Mode       (Gb/s)      State      Status
ID
------- ------- ------- ---------- ----------- ---------- ----------
-----
node1
        e0c     ENET   storage          100      enabled  online
30
        e0d     ENET   storage            0      enabled  offline
30
        e5a     ENET   storage            0      enabled  offline
30
        e5b     ENET   storage          100      enabled  online
30

node2
        e0c     ENET  storage           100      enabled  online
30
        e0d     ENET  storage             0      enabled  offline
30
        e5a     ENET  storage             0      enabled  offline
30
        e5b     ENET  storage           100      enabled  online
30
```

7. Check that there are no storage switch or cabling issues with the cluster:

   `system health alert show -instance`

   Show example

   ```
   storage::*> system health alert show -instance
   There are no entries matching your query.
   ```

8. Move the HA pair 1, NSM224 path B ports to sh2 port range 11-22.
9. Install a cable from HA pair 1, node1, path B to sh2 port range 11-22. For example, the path B storage port on an AFF A400 is e5b.
10. Install a cable from HA pair 1, node2, path B to sh2 port range 11-22.

11. Verify that the node ports are healthy and operational:

```
storage port show -port-type ENET
```

Show example

```
storage::*> storage port show -port-type ENET
                                     Speed
VLAN
Node    Port    Type    Mode       (Gb/s)      State      Status
ID
------- ------- ------- ---------- ----------- ---------- ----------
-----
node1
        e0c     ENET   storage          100      enabled  online
30
        e0d     ENET   storage            0      enabled  offline
30
        e5a     ENET   storage            0      enabled  offline
30
        e5b     ENET   storage          100      enabled  online
30

node2
        e0c     ENET  storage           100      enabled  online
30
        e0d     ENET  storage             0      enabled  offline
30
        e5a     ENET  storage             0      enabled  offline
30
        e5b     ENET  storage           100      enabled  online
30
```

12. Verify that the storage configuration of HA pair 1 is correct and error free:

```
system switch ethernet show
```

Show example

```
storage::*> system switch ethernet show
Switch                    Type                    Address
Model
------------------------- ----------------------- ----------------
----------
sh1
                          storage-network         172.17.227.5
C9336C

      Serial Number: FOC221206C2
       Is Monitored: true
             Reason: None
   Software Version: Cisco Nexus Operating System (NX-OS) Software,
Version
                     9.3(5)
     Version Source: CDP
sh2
                          storage-network         172.17.227.6
C9336C
      Serial Number: FOC220443LZ
       Is Monitored: true
             Reason: None
   Software Version: Cisco Nexus Operating System (NX-OS) Software,
Version
                     9.3(5)
     Version Source: CDP
2 entries were displayed.
storage::*>
```

13. Reconfigure the unused (controller) secondary storage ports on HA pair 1 from storage to networking. If more than one NS224 was direct attached, there will be ports that should be reconfigured.

Show example

```
storage port modify -node [node name] -port [port name] -mode
network
```

To place storage ports into a broadcast domain:

- `network port broadcast-domain create` (to create a new domain, if needed)
- `network port broadcast-domain add-ports` (to add ports to an existing domain)

14. If you suppressed automatic case creation, re-enable it by invoking an AutoSupport message:

```
system node autosupport invoke -node * -type all -message MAINT=END
```

Migrate from a switched configuration with direct-attached storage

You can migrate from a switched configuration with direct-attached storage by adding two new shared switches.

Supported switches

The following switches are supported:

- Nexus 9336C-FX2
- Nexus 3232C

The ONTAP and NX-OS versions supported in this procedure are on the Cisco Ethernet Switches page. See Cisco Ethernet switches.

Connection Ports

The switches use the following ports to connect to nodes:

- Nexus 9336C-FX2:
  - Ports 1- 3: Breakout mode (4x10G) Intra-Cluster Ports, int e1/1/1-4, e1/2/1-4, e1/3/1-4
  - Ports 4- 6: Breakout mode (4x25G) Intra-Cluster/HA Ports, int e1/4/1-4, e1/5/1-4, e1/6/1-4
  - Ports 7-34: 40/100GbE Intra-Cluster/HA Ports, int e1/7-34
- Nexus 3232C:
  - Ports 1-30: 10/40/100 GbE
- The switches use the following Inter-Switch Link (ISL) ports:
  - Ports int e1/35-36: Nexus 9336C-FX2
  - Ports e1/31-32: Nexus 3232C

The Hardware Universe contains information about supported cabling for all cluster switches.

What you'll need

- Make sure you completed the following tasks:
  - Configured some of the ports on Nexus 9336C-FX2 switches to run at 100 GbE.
  - Planned, migrated, and documented 100 GbE connectivity from nodes to Nexus 9336C-FX2 switches.
  - Migrated nondisruptively other Cisco cluster switches from an ONTAP cluster to Cisco Nexus 9336C-FX2 network switches.
- The existing switch network is properly set up and functioning.
- All ports are in the **up** state to ensure nondisruptive operations.
- The Nexus 9336C-FX2 switches are configured and operating under the proper version of NX-OS installed and reference configuration file (RCF) applied.
- The existing network configuration has the following:
  - A redundant and fully functional NetApp cluster using both older Cisco switches.

- Management connectivity and console access to both the older Cisco switches and the new switches.
- All cluster LIFs in the **up** state with the cluster LIFs are on their home ports.
- ISL ports enabled and cabled between the other Cisco switches and between the new switches.

About the examples

The examples in this procedure use the following switch and node nomenclature:

- The existing Cisco Nexus 3232C cluster switches are *c1* and *c2*.
- The new Nexus 9336C-FX2 switches are *sh1* and *sh2*.
- The nodes are *node1* and *node2*.
- The cluster LIFs are *node1_clus1* and *node1_clus2* on node 1, and *node2_clus1* and *node2_clus2* on node 2 respectively.
- Switch c2 is replaced by switch sh2 first and then switch c1 is replaced by switch sh1.

Steps

1. If AutoSupport is enabled on this cluster, suppress automatic case creation by invoking an AutoSupport message:

   ```
   system node autosupport invoke -node * -type all -message MAINT=x h
   ```

   Where x is the duration of the maintenance window in hours.

2. Check the administrative and operational status of each cluster port.
3. Verify that all the cluster ports are up with a healthy status:

   ```
   network port show –role cluster
   ```

Show example

```
cluster1::*> network port show -role cluster
Node: node1

Ignore
                                                  Speed(Mbps)  Health
Health
Port    IPspace   Broadcast Domain Link MTU  Admin/Ope    Status
Status
------- --------- ---------------- ---- ---- ------------ --------
------
e3a     Cluster   Cluster          up   9000  auto/100000 healthy
false
e3b     Cluster   Cluster          up   9000  auto/100000 healthy
false

Node: node2

Ignore
                                                  Speed(Mbps) Health
Health
Port    IPspace   Broadcast Domain Link MTU  Admin/Oper  Status
Status
------- --------- ---------------- ---- ---- ----------- ---------
------
e3a     Cluster   Cluster          up   9000  auto/100000 healthy
false
e3b     Cluster   Cluster          up   9000  auto/100000 healthy
false
4 entries were displayed.
cluster1::*>
```

4. Verify that all the cluster interfaces (LIFs) are on the home port:

```
network interface show -role cluster
```

Show example

```
cluster1::*> network interface show -role cluster
         Logical     Status     Network           Current
Current Is
Vserver  Interface   Admin/Oper Address/Mask      Node        Port
Home
-------  ----------- ---------- ----------------- -----------
------- ----
Cluster
        node1_clus1  up/up      169.254.3.4/23    node1       e3a
true
        node1_clus2  up/up      169.254.3.5/23    node1       e3b
true
        node2_clus1  up/up      169.254.3.8/23    node2       e3a
true
        node2_clus2  up/up      169.254.3.9/23    node2       e3b
true
4 entries were displayed.
cluster1::*>
```

5. Verify that the cluster displays information for both cluster switches:

```
system cluster-switch show -is-monitoring-enabled-operational true
```

Show example

```
cluster1::*> system cluster-switch show -is-monitoring-enabled
-operational true
Switch                    Type               Address          Model
------------------------- ------------------ ---------------- ------
sh1                       cluster-network    10.233.205.90    N9K-
C9336C
     Serial Number: FOCXXXXXXGD
      Is Monitored: true
            Reason: None
  Software Version: Cisco Nexus Operating System (NX-OS) Software,
Version
                    9.3(5)
    Version Source: CDP
sh2                       cluster-network    10.233.205.91    N9K-
C9336C
     Serial Number: FOCXXXXXXGS
      Is Monitored: true
            Reason: None
  Software Version: Cisco Nexus Operating System (NX-OS) Software,
Version
                    9.3(5)
    Version Source: CDP
cluster1::*>
```

6. Disable auto-revert on the cluster LIFs.

Show example

```
cluster1::*> network interface modify -vserver Cluster -lif * -auto
-revert false
```

7. Shut down the c2 switch.

Show example

```
c2# configure terminal
Enter configuration commands, one per line. End with CNTL/Z.
c2(config)# interface ethernet <int range>
c2(config)# shutdown
```

8. Verify that the cluster LIFs have migrated to the ports hosted on cluster switch sh1:

```
network interface show -role cluster
```

This might take a few seconds.

Show example

```
cluster1::*> network interface show -role cluster
          Logical     Status     Network         Current
Current  Is
Vserver   Interface   Admin/Oper Address/Mask    Node         Port
Home
--------- ----------- ---------- --------------- ------------
-------- -----
Cluster
          node1_clus1 up/up      169.254.3.4/23  node1        e3a
true
          node1_clus2 up/up      169.254.3.5/23  node1        e3a
false
          node2_clus1 up/up      169.254.3.8/23  node2        e3a
true
          node2_clus2 up/up      169.254.3.9/23  node2        e3a
false
4 entries were displayed.
cluster1::*>
```

9. Replace switch c2 with the new switch sh2 and re-cable the new switch.
10. Verify that the ports are back up on sh2. **Note** that the LIFs are still on switch c1.
11. Shut down the c1 switch.

Show example

```
c1# configure terminal
Enter configuration commands, one per line. End with CNTL/Z.
c1(config)# interface ethernet <int range>
c1(config)# shutdown
```

12. Verify that the cluster LIFs have migrated to the ports hosted on cluster switch sh2. This might take a few seconds.

Show example

```
cluster1::*> network interface show -role cluster
         Logical        Status     Network         Current   Current
Is
Vserver  Interface      Admin/Oper Address/Mask    Node      Port
Home
-------- -------------- ---------- --------------- --------- -------
----
Cluster
         node1_clus1    up/up      169.254.3.4/23  node1     e3a
true
         node1_clus2    up/up      169.254.3.5/23  node1     e3a
false
         node2_clus1    up/up      169.254.3.8/23  node2     e3a
true
         node2_clus2    up/up      169.254.3.9/23  node2     e3a
false
4 entries were displayed.
cluster1::*>
```

13. Replace switch c1 with the new switch sh1 and re-cable the new switch.
14. Verify that the ports are back up on sh1. **Note** that the LIFs are still on switch c2.
15. Enable auto-revert on the cluster LIFs:

Show example

```
cluster1::*> network interface modify -vserver Cluster -lif * -auto
-revert True
```

16. Verify that the cluster is healthy:

```
cluster show
```

Show example

```
cluster1::*> cluster show
Node                 Health  Eligibility   Epsilon
-------------------- ------- ------------- -------
node1                true    true          false
node2                true    true          false
2 entries were displayed.
cluster1::*>
```

Migrate from a switchless configuration with switch-attached storage by reusing the storage switches

You can migrate from a switchless configuration with switch-attached storage by reusing the storage switches.

By reusing the storage switches the storage switches of HA pair 1 become the shared switches as shown in the following figure.

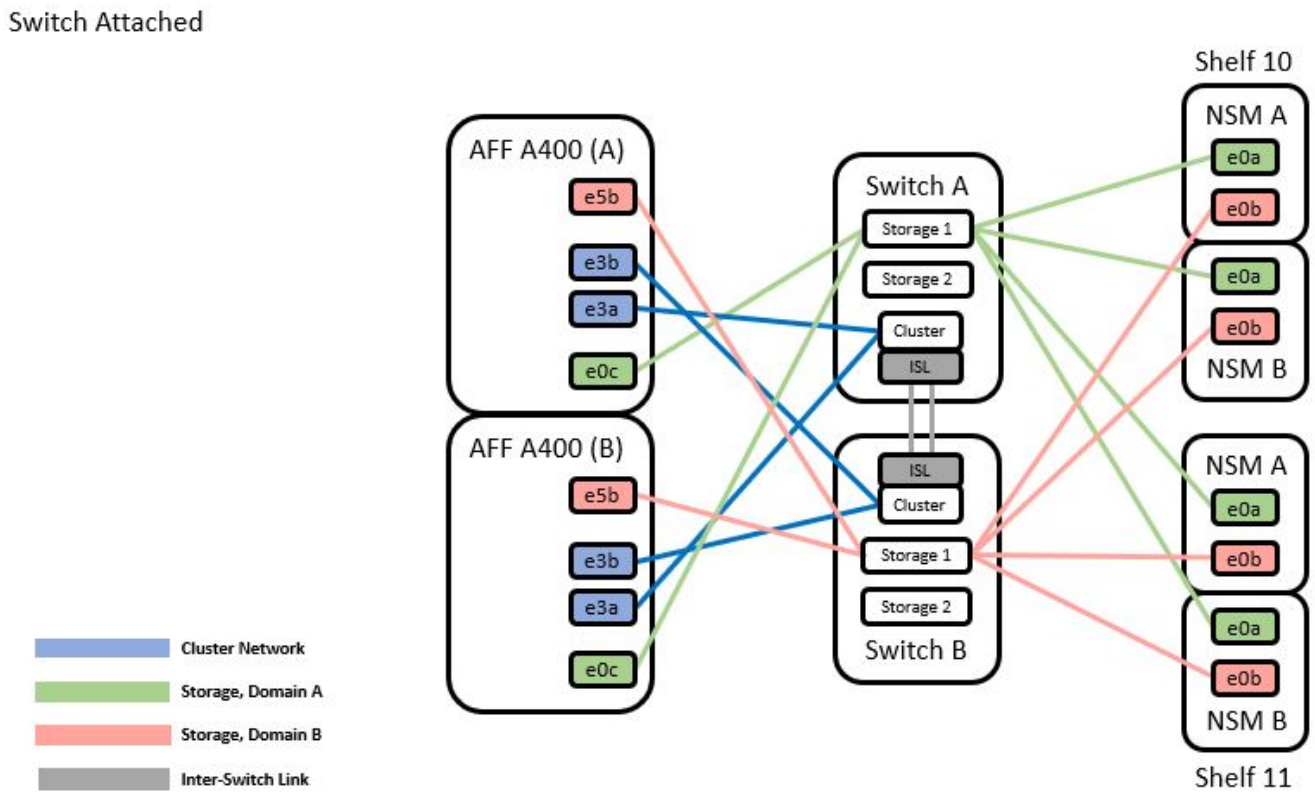

Steps

1. Verify that the storage configuration of HA pair 1 (and HA pair 2) is correct and error free:

```
system switch ethernet show
```

Show example

```
storage::*> system switch ethernet show
Switch                    Type                  Address
Model
------------------------- --------------------- ----------------
----------
sh1
                          storage-network       172.17.227.5
C9336C

    Serial Number: FOC221206C2
     Is Monitored: true
           Reason: none
 Software Version: Cisco Nexus Operating System (NX-OS) Software,
Version
                   9.3(5)
   Version Source: CDP
sh2
                        storage-network        172.17.227.6
C9336C
    Serial Number: FOC220443LZ
     Is Monitored: true
           Reason: None
 Software Version: Cisco Nexus Operating System (NX-OS) Software,
Version
                   9.3(5)
   Version Source: CDP
2 entries were displayed.
storage::*>
```

2. Verify that the node ports are healthy and operational:

```
storage port show -port-type ENET
```

Show example

```
storage::*> storage port show -port-type ENET
                                     Speed
VLAN
Node    Port    Type    Mode       (Gb/s)    State     Status
ID
------- ------- ------- ---------- --------- --------- ---------
-----
node1
        e0c     ENET    storage          100 enabled   online
30
        e0d     ENET    storage          100 enabled   online
30
        e5a     ENET    storage          100 enabled   online
30
        e5b     ENET    storage          100 enabled   online
30

node2
        e0c     ENET    storage          100 enabled   online
30
        e0d     ENET    storage          100 enabled   online
30
        e5a     ENET    storage          100 enabled   online
30
        e5b     ENET    storage          100 enabled   online
30
```

3. Move the HA pair 1, NSM224 path A cables from storage switch A to the shared NS224 storage ports for HA pair 1, path A on storage switch A.
4. Move the cable from HA pair 1, node A, path A to the shared storage port for HA pair 1, node A on storage switch A.
5. Move the cable from HA pair 1, node B, path A to the shared storage port for HA pair 1, node B on storage switch A.
6. Verify the storage attached to HA pair 1, storage switch A is healthy:

   ```
   system health alert show -instance
   ```

Show example

```
storage::*> system health alert show -instance
There are no entries matching your query.
```

7. Replace the storage RCF on shared switch A with the shared RCF file. See Install the RCF on a Cisco Nexus 9336C-FX2 shared switch for further details.
8. Verify the storage attached to HA pair 1, storage switch B is healthy:

   ```
   system health alert show -instance
   ```

   Show example

   ```
   storage::*> system health alert show -instance
   There are no entries matching your query.
   ```

9. Move the HA pair 1, NSM224 path B cables from storage switch B to the shared NS224 storage ports for HA pair 1, path B to storage switch B.
10. Move the cable from HA pair 1, node A, path B to the shared storage port for HA pair 1, node A, path B on storage switch B.
11. Move the cable from HA pair 1, node B, path B to the shared storage port for HA pair 1, node B, path B on storage switch B.
12. Verify the storage attached to HA pair 1, storage switch B is healthy:

    ```
    system health alert show -instance
    ```

    Show example

    ```
    storage::*> system health alert show -instance
    There are no entries matching your query.
    ```

13. Replace the storage RCF file on shared switch B with the shared RCF file. See Install the RCF on a Cisco Nexus 9336C-FX2 shared switch for further details.
14. Verify the storage attached to HA pair 1, storage switch B is healthy:

    ```
    system health alert show -instance
    ```

Show example

```
storage::*> system health alert show -instance
There are no entries matching your query.
```

15. Install the ISLs between shared switch A and shared switch B:

Show example

```
sh1# configure
Enter configuration commands, one per line. End with CNTL/Z.
sh1 (config)# interface e1/35-36
sh1 (config-if-range)# no lldp transmit
sh1 (config-if-range)# no lldp receive
sh1 (config-if-range)# switchport mode trunk
sh1 (config-if-range)# no spanning-tree bpduguard enable
sh1 (config-if-range)# channel-group 101 mode active
sh1 (config-if-range)# exit
sh1 (config)# interface port-channel 101
sh1 (config-if)# switchport mode trunk
sh1 (config-if)# spanning-tree port type network
sh1 (config-if)# exit
sh1 (config)# exit
```

16. Convert HA pair 1 from a switchless cluster to a switched cluster. Use the cluster port assignments defined by the shared RCF. See Install NX-OS software and Reference Configuration Files (RCFs) for further details.
17. Verify that the switched networking configuration is valid:

```
network port show
```

Migrate from a switched cluster with switch-attached storage

You can migrate from a switched cluster with switch-attached storage by reusing the storage switches.

By reusing the storage switches the storage switches of HA pair 1 become the shared switches as shown in the following figure.

Switch Attached

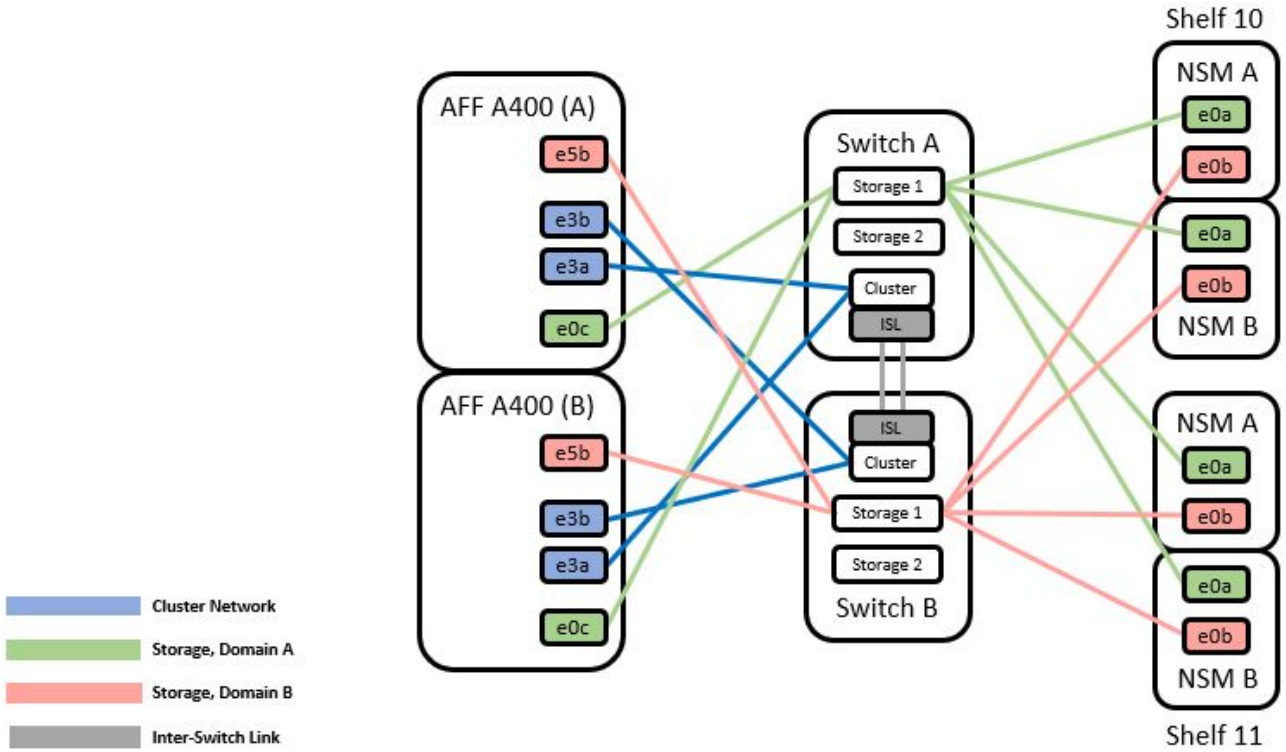

Steps

1. Verify that the storage configuration of HA pair 1 (and HA pair 2) is correct and error free:

   ```
   system switch ethernet show
   ```

Show example

```
storage::*> system switch ethernet show
Switch                    Type               Address          Model
------------------------- ------------------ ----------------
----------
sh1
                          storage-network    172.17.227.5     C9336C

     Serial Number: FOC221206C2
      Is Monitored: true
            Reason: None
  Software Version: Cisco Nexus Operating System (NX-OS) Software,
Version
                    9.3(5)
       Version Source: CDP
sh2
                          storage-network    172.17.227.6     C9336C
     Serial Number: FOC220443LZ
      Is Monitored: true
            Reason: None
  Software Version: Cisco Nexus Operating System (NX-OS) Software,
Version
                    9.3(5)
    Version Source: CDP
2 entries were displayed.
storage::*>
```

2. Move the HA pair 1, NSM224 path A cables from storage switch A to the NSM224 storage ports for HA pair 1, path A on storage switch A.
3. Move the cable from HA pair 1, node A, path A to the NSM224 storage port for HA pair 1, node A on storage switch A.
4. Move the cable from HA pair 1, node B, path A to the NSM224 storage port for HA pair 1, node B on storage switch A.
5. Verify the storage attached to HA pair 1, storage switch A is healthy:

   ```
   storage port show -port-type ENET
   ```

Show example

```
storage::*> storage port show -port-type ENET
                                     Speed
VLAN
Node     Port     Type     Mode        (Gb/s)        State     Status
ID
------- ------- ------- ---------- ------------ --------- ---------
-----
node1
        e0c      ENET     storage            100  enabled   online
30
        e0d      ENET     storage            100  enabled   online
30
        e5a      ENET     storage            100  enabled   online
30
        e5b      ENET     storage            100  enabled   online
30

node2
        e0c      ENET     storage            100  enabled   online
30
        e0d      ENET     storage            100  enabled   online
30
        e5a      ENET     storage            100  enabled   online
30
        e5b      ENET     storage            100  enabled   online
30
```

6. Replace the storage RCF on shared switch A with the shared RCF file. See Install the RCF on a Cisco Nexus 9336C-FX2 shared switch for further details.
7. Verify the storage attached to HA pair 1, storage switch A is healthy:

   `system health alert show -instance`

   Show example

   ```
   storage::*> system health alert show -instance
   There are no entries matching your query.
   ```

8. Move the HA pair 1, NSM224 path B cables from storage switch B to the shared NS224 storage ports for HA pair 1, path B to storage switch B.

9. Move the cable from HA pair 1, node A, path B to the shared storage port for HA pair 1, node A, path B on storage switch B.
10. Move the cable from HA pair 1, node B, path B to the shared storage port for HA pair 1, node B, path B on storage switch B.
11. Verify the storage attached to HA pair 1, storage switch B is healthy:

    ```
    system health alert show -instance
    ```

    Show example

    ```
    storage::*> system health alert show -instance
    There are no entries matching your query.
    ```

12. Replace the storage RCF file on shared switch B with the shared RCF file. See Install the RCF on a Cisco Nexus 9336C-FX2 shared switch for further details.
13. Verify the storage attached to HA pair 1, storage switch B is healthy:

    ```
    system health alert show -instance
    ```

    Show example

    ```
    storage::*> system health alert show -instance
    There are no entries matching your query.
    ```

14. Verify the storage configuration of HA pair 1 is correct and error free:

    ```
    system switch ethernet show
    ```

Show example

```
storage::*> system switch ethernet show
Switch                    Type                 Address
Model
------------------------- -------------------- ----------------
----------
sh1
                          storage-network      172.17.227.5
C9336C

    Serial Number: FOC221206C2
     Is Monitored: true
           Reason: None
 Software Version: Cisco Nexus Operating System (NX-OS) Software,
Version
                   9.3(5)
   Version Source: CDP
sh2
                          storage-network      172.17.227.6
C9336C
    Serial Number: FOC220443LZ
     Is Monitored: true
           Reason: None
 Software Version: Cisco Nexus Operating System (NX-OS) Software,
Version
                   9.3(5)
   Version Source: CDP
2 entries were displayed.
storage::*>
```

15. Install the ISLs between shared switch A and shared switch B:

Show example

```
sh1# configure
Enter configuration commands, one per line. End with CNTL/Z.
sh1 (config)# interface e1/35-36*
sh1 (config-if-range)# no lldp transmit
sh1 (config-if-range)# no lldp receive
sh1 (config-if-range)# switchport mode trunk
sh1 (config-if-range)# no spanning-tree bpduguard enable
sh1 (config-if-range)# channel-group 101 mode active
sh1 (config-if-range)# exit
sh1 (config)# interface port-channel 101
sh1 (config-if)# switchport mode trunk
sh1 (config-if)# spanning-tree port type network
sh1 (config-if)# exit
sh1 (config)# exit
```

16. Migrate the cluster networking from the existing cluster switches to the shared switches using the switch replacement procedure and the shared RCF. The new shared switch A is "cs1". The new shared switch B is "cs2". See Replace a Cisco Nexus 9336C-FX2 shared switch and Install the RCF on a Cisco Nexus 9336C-FX2 shared switch for further details.
17. Verify that the switched networking config is valid:

    ```
    network port show
    ```

18. Remove the unused cluster switches.
19. Remove the unused storage switches.

Replace a Cisco Nexus 9336C-FX2 shared switch

You can replace a defective Nexus 9336C-FX2 shared switch. This is a nondisruptive procedure (NDU).

What you'll need

Before performing the switch replacement, make sure that:

- In the existing cluster and network infrastructure:
  - The existing cluster is verified as completely functional, with at least one fully connected cluster switch.
  - All cluster ports are **up**.
  - All cluster logical interfaces (LIFs) are **up** and on their home ports.
  - The ONTAP cluster ping-cluster -node node1 command must indicate that basic connectivity and larger than PMTU communication are successful on all paths.
- For the Nexus 9336C-FX2 replacement switch:

- Management network connectivity on the replacement switch is functional.
- Console access to the replacement switch is in place.
- The node connections are ports 1/1 through 1/34:
- All Inter-Switch Link (ISL) ports are disabled on ports 1/35 and 1/36.
- The desired reference configuration file (RCF) and NX-OS operating system image switch is loaded onto the switch.
- Any previous site customizations, such as STP, SNMP, and SSH, should be copied to the new switch.

About the examples

You must execute the command for migrating a cluster LIF from the node where the cluster LIF is hosted.

The examples in this procedure use the following switch and node nomenclature:

- The names of the existing Nexus 9336C-FX2 switches are *sh1* and *sh2*.
- The name of the new Nexus 9336C-FX2 switches are *newsh1* and *newsh2*.
- The node names are *node1* and *node2*.
- The cluster ports on each node are named *e3a* and *e3b*.
- The cluster LIF names are `node1_clus1` and `node1_clus2` for node1, and `node2_clus1` and `node2_clus2` for node2.
- The prompt for changes to all cluster nodes is cluster1::*>.

The following procedure is based on the following network topology:

Show example topology

```
cluster1::*> network port show -ipspace Cluster

Node: node1

Ignore
                                                  Speed(Mbps)  Health
Health
Port      IPspace      Broadcast Domain Link MTU  Admin/Oper   Status
Status
--------- ------------ ---------------- ---- ---- ------------ --------
------
e3a       Cluster      Cluster          up   9000  auto/100000 healthy
false
e3b       Cluster      Cluster          up   9000  auto/100000 healthy
false

Node: node2

Ignore
                                                  Speed(Mbps)  Health
Health
Port      IPspace      Broadcast Domain Link MTU  Admin/Oper   Status
Status
--------- ------------ ---------------- ---- ---- ------------ --------
------
e3a       Cluster      Cluster          up   9000  auto/100000 healthy
false
e3b       Cluster      Cluster          up   9000  auto/100000 healthy
false
4 entries were displayed.


cluster1::*> network interface show -vserver Cluster
            Logical    Status     Network            Current
Current Is
Vserver     Interface  Admin/Oper Address/Mask       Node          Port
Home
----------- ---------- ---------- ------------------ -------------
------- ----
Cluster
            node1_clus1  up/up    169.254.209.69/16  node1         e3a
true
            node1_clus2  up/up    169.254.49.125/16  node1         e3b
true
```

```
            node2_clus1  up/up    169.254.47.194/16  node2         e3a
true
            node2_clus2  up/up    169.254.19.183/16  node2         e3b
true
4 entries were displayed.

cluster1::*> network device-discovery show -protocol cdp
Node/       Local  Discovered
Protocol    Port   Device (LLDP: ChassisID)  Interface         Platform
----------- ------ ------------------------- ----------------
----------------
node2      /cdp
            e3a    sh1                       Eth1/2            N9K-
C9336C
            e3b    sh2                       Eth1/2            N9K-
C9336C

node1      /cdp
            e3a    sh1                       Eth1/1            N9K-
C9336C
            e3b    sh2                       Eth1/1            N9K-
C9336C
4 entries were displayed.

sh1# show cdp neighbors
Capability Codes: R - Router, T - Trans-Bridge, B - Source-Route-Bridge
                  S - Switch, H - Host, I - IGMP, r - Repeater,
                  V - VoIP-Phone, D - Remotely-Managed-Device,
                  s - Supports-STP-Dispute
Device-ID          Local Intrfce  Hldtme Capability  Platform      Port
ID
node1              Eth1/1         144    H           FAS2980       e3a
node2              Eth1/2         145    H           FAS2980       e3a
sh2                Eth1/35        176    R S I s     N9K-C9336C
Eth1/35
sh2 (FDO220329V5)   Eth1/36       176    R S I s     N9K-C9336C
Eth1/36
Total entries displayed: 4

sh2# show cdp neighbors
Capability Codes: R - Router, T - Trans-Bridge, B - Source-Route-Bridge
                  S - Switch, H - Host, I - IGMP, r - Repeater,
                  V - VoIP-Phone, D - Remotely-Managed-Device,
                  s - Supports-STP-Dispute
Device-ID          Local Intrfce  Hldtme Capability  Platform      Port
ID
```

```
node1                Eth1/1          139    H           FAS2980       eb
node2                Eth1/2          124    H           FAS2980       eb
sh1                  Eth1/35         178    R S I s     N9K-C9336C
Eth1/35
sh1                  Eth1/36         178    R S I s     N9K-C9336C
Eth1/36
Total entries displayed: 4
```

Steps

1. If AutoSupport is enabled on this cluster, suppress automatic case creation by invoking an AutoSupport message:

   ```
   system node autosupport invoke -node * -type all -message MAINT=xh
   ```

   Where x is the duration of the maintenance window in hours.

2. Optional: Install the appropriate RCF and image on the switch, newsh2, and make any necessary site preparations.

   a. If necessary, verify, download, and install the appropriate versions of the RCF and NX-OS software for the new switch. If you have verified that the new switch is correctly set up and does not need updates to the RCF and NX-OS software, continue to Step 3.

   b. Go to the NetApp Cluster and Management Network Switches Reference Configuration File Description Page on the NetApp Support Site.

   c. Click the link for the Cluster Network and Management Network Compatibility Matrix, and then note the required switch software version.

   d. Click your browser's back arrow to return to the Description page, click CONTINUE, accept the license agreement, and then go to the Download page.

   e. Follow the steps on the Download page to download the correct RCF and NX-OS files for the version of ONTAP software you are installing.

3. On the new switch, log in as admin and shut down all the ports that will be connected to the node cluster interfaces (ports 1/1 to 1/34).
   If the switch that you are replacing is not functional and is powered down, go to Step 4. The LIFs on the cluster nodes should have already failed over to the other cluster port for each node.

   Show example

   ```
   newsh2# config
   Enter configuration commands, one per line. End with CNTL/Z.
   newsh2(config)# interface e1/1-34
   newsh2(config-if-range)# shutdown
   ```

4. Verify that all cluster LIFs have auto-revert enabled.

   ```
   network interface show - vserver Cluster -fields auto-revert
   ```

Show example

```
cluster1::> network interface show -vserver Cluster -fields auto-
revert
             Logical
Vserver      Interface     Auto-revert
------------ ------------- -------------
Cluster      node1_clus1   true
Cluster      node1_clus2   true
Cluster      node2_clus1   true
Cluster      node2_clus2   true
4 entries were displayed.
```

5. Verify that all the cluster LIFs can communicate:

```
cluster ping-cluster <node name>
```

Show example

```
cluster1::*> cluster ping-cluster node2
Host is node2
Getting addresses from network interface table...
Cluster node1_clus1 169.254.209.69 node1 e3a
Cluster node1_clus2 169.254.49.125 node1 e3b
Cluster node2_clus1 169.254.47.194 node2 e3a
Cluster node2_clus2 169.254.19.183 node2 e3b
Local = 169.254.47.194 169.254.19.183
Remote = 169.254.209.69 169.254.49.125
Cluster Vserver Id = 4294967293
Ping status:
....
Basic connectivity succeeds on 4 path(s)
Basic connectivity fails on 0 path(s)
................
Detected 9000 byte MTU on 4 path(s):
Local 169.254.47.194 to Remote 169.254.209.69
Local 169.254.47.194 to Remote 169.254.49.125
Local 169.254.19.183 to Remote 169.254.209.69
Local 169.254.19.183 to Remote 169.254.49.125
Larger than PMTU communication succeeds on 4 path(s)
RPC status:
2 paths up, 0 paths down (tcp check)
2 paths up, 0 paths down (udp check)
```

6. Shut down the ISL ports 1/35 and 1/36 on the Nexus 9336C-FX2 switch sh1.

Show example

```
sh1# configure
Enter configuration commands, one per line. End with CNTL/Z.
sh1(config)# interface e1/35-36
sh1(config-if-range)# shutdown
```

7. Remove all the cables from the Nexus 9336C-FX2 sh2 switch, and then connect them to the same ports on the Nexus C9336C-FX2 newsh2 switch.
8. Bring up the ISLs ports 1/35 and 1/36 between the sh1 and newsh2 switches, and then verify the port channel operation status.

   Port-Channel should indicate Po1(SU) and Member Ports should indicate Eth1/35(P) and Eth1/36(P).

Show example

This example enables ISL ports 1/35 and 1/36 and displays the port channel summary on switch sh1.

```
sh1# configure
Enter configuration commands, one per line. End with CNTL/Z.
sh1 (config)# int e1/35-36
sh1 (config-if-range)# no shutdown
sh1 (config-if-range)# show port-channel summary
Flags:  D - Down        P - Up in port-channel (members)
        I - Individual  H - Hot-standby (LACP only)
        s - Suspended   r - Module-removed
        b - BFD Session Wait
        S - Switched    R - Routed
        U - Up (port-channel)
        p - Up in delay-lacp mode (member)
        M - Not in use. Min-links not met
--------------------------------------------------------------------
------------
Group Port-       Type     Protocol  Member       Ports
      Channel
--------------------------------------------------------------------
------------
1     Po1(SU)     Eth      LACP      Eth1/35(P)   Eth1/36(P)

sh1 (config-if-range)#
```

9. Verify that port e3b is up on all nodes:

```
network port show ipspace Cluster
```

Show example

The output should be like the following:

```
cluster1::*> network port show -ipspace Cluster

Node: node1

Ignore
                                                      Speed(Mbps)
Health   Health
Port      IPspace      Broadcast Domain Link MTU   Admin/Oper
Status   Status
--------- ------------ ---------------- ---- ----- ---------- - -
-------- ----
e3a       Cluster      Cluster          up   9000  auto/100000
healthy  false
e3b       Cluster      Cluster          up   9000  auto/100000
healthy  false

Node: node2

Ignore
                                                      Speed(Mbps)
Health   Health
Port      IPspace      Broadcast Domain Link MTU   Admin/Oper
Status   Status
--------- ------------ ---------------- ---- ----- ----------- -
-------- ----
e3a       Cluster      Cluster          up   9000  auto/100000
healthy  false
e3b       Cluster      Cluster          up   9000  auto/auto    -
false
4 entries were displayed.
```

10. On the same node you used in the previous step, revert the cluster LIF associated with the port in the previous step by using the network interface revert command.

    In this example, LIF node1_clus2 on node1 is successfully reverted if the Home value is true and the port is e3b.

    The following commands return LIF node1_clus2 on node1 to home port e3a and displays information about the LIFs on both nodes. Bringing up the first node is successful if the Is Home column is **true** for both cluster interfaces and they show the correct port assignments, in this example e3a and e3b on node1.

Show example

```
cluster1::*> network interface show -vserver Cluster

            Logical      Status     Network            Current
Current Is
Vserver     Interface    Admin/Oper Address/Mask       Node
Port    Home
----------- ------------ ---------- ------------------ ----------
------- -----
Cluster
            node1_clus1  up/up      169.254.209.69/16  node1
e3a     true
            node1_clus2  up/up      169.254.49.125/16  node1
e3b     true
            node2_clus1  up/up      169.254.47.194/16  node2
e3a     true
            node2_clus2  up/up      169.254.19.183/16  node2
e3a     false
4 entries were displayed.
```

11. Display information about the nodes in a cluster:

```
cluster show
```

Show example

This example shows that the node health for node1 and node2 in this cluster is true:

```
cluster1::*> cluster show
Node          Health  Eligibility
------------- ------- ------------
node1         false   true
node2         true    true
```

12. Verify that all physical cluster ports are up:

```
network port show ipspace Cluster
```

Show example

```
cluster1::*> network port show -ipspace Cluster

Node node1
Ignore
                                                        Speed(Mbps)
Health   Health
Port      IPspace     Broadcast Domain  Link  MTU   Admin/Oper
Status   Status
--------- ----------- ----------------- ----- ----- ------------
-------- ------
e3a       Cluster     Cluster           up    9000  auto/100000
healthy  false
e3b       Cluster     Cluster           up    9000  auto/100000
healthy  false

Node: node2

Ignore
                                                        Speed(Mbps)
Health   Health
Port      IPspace      Broadcast Domain Link  MTU   Admin/Oper
Status   Status
--------- ------------ ---------------- ----- ----- ------------
-------- ------
e3a       Cluster      Cluster          up    9000  auto/100000
healthy  false
e3b       Cluster      Cluster          up    9000  auto/100000
healthy  false
4 entries were displayed.
```

13. Verify that all the cluster LIFs can communicate:

```
cluster ping-cluster
```

Show example

```
cluster1::*> cluster ping-cluster -node node2
Host is node2
Getting addresses from network interface table...
Cluster node1_clus1 169.254.209.69 node1 e3a
Cluster node1_clus2 169.254.49.125 node1 e3b
Cluster node2_clus1 169.254.47.194 node2 e3a
Cluster node2_clus2 169.254.19.183 node2 e3b
Local = 169.254.47.194 169.254.19.183
Remote = 169.254.209.69 169.254.49.125
Cluster Vserver Id = 4294967293
Ping status:
....
Basic connectivity succeeds on 4 path(s)
Basic connectivity fails on 0 path(s)
................
Detected 9000 byte MTU on 4 path(s):
Local 169.254.47.194 to Remote 169.254.209.69
Local 169.254.47.194 to Remote 169.254.49.125
Local 169.254.19.183 to Remote 169.254.209.69
Local 169.254.19.183 to Remote 169.254.49.125
Larger than PMTU communication succeeds on 4 path(s)
RPC status:
2 paths up, 0 paths down (tcp check)
2 paths up, 0 paths down (udp check)
```

14. Confirm the following cluster network configuration:

```
network port show
```

Show example

```
cluster1::*> network port show -ipspace Cluster

Node: node1

Ignore
                                          Speed(Mbps)
Health   Health
Port      IPspace     Broadcast Domain Link MTU   Admin/Oper
Status   Status
--------- ----------- ---------------- ---- ----- ------------
-------- ------
e3a       Cluster     Cluster          up   9000  auto/100000
healthy  false
e3b       Cluster     Cluster          up   9000  auto/100000
healthy  false

Node: node2

Ignore
                                           Speed(Mbps)
Health   Health
Port      IPspace      Broadcast Domain Link MTU  Admin/Oper
Status   Status
--------- ------------ ---------------- ---- ---- ------------
-------- ------
e3a       Cluster      Cluster          up   9000 auto/100000
healthy  false
e3b       Cluster      Cluster          up   9000 auto/100000
healthy  false
4 entries were displayed.

cluster1::*> network interface show -vserver Cluster
            Logical    Status     Network            Current
Current Is
Vserver     Interface  Admin/Oper Address/Mask       Node
Port    Home
----------- ---------- ---------- ------------------ -------------
------- ----
Cluster
            node1_clus1  up/up    169.254.209.69/16  node1
e3a     true
            node1_clus2  up/up    169.254.49.125/16  node1
e3b     true
            node2_clus1  up/up    169.254.47.194/16  node2
```

```
e3a     true
            node2_clus2  up/up    169.254.19.183/16  node2
e3b     true
4 entries were displayed.

cluster1::> network device-discovery show -protocol cdp
Node/       Local  Discovered
Protocol    Port   Device (LLDP: ChassisID)  Interface
Platform
----------- ------ ------------------------- ----------------
----------------
node2      /cdp
            e3a    sh1    0/2               N9K-C9336C
            e3b    newsh2                    0/2               N9K-
C9336C
node1      /cdp
            e3a    sh1                       0/1               N9K-
C9336C
            e3b    newsh2                    0/1               N9K-
C9336C
4 entries were displayed.

sh1# show cdp neighbors
Capability Codes: R - Router, T - Trans-Bridge, B - Source-Route-
Bridge
                  S - Switch, H - Host, I - IGMP, r - Repeater,
                  V - VoIP-Phone, D - Remotely-Managed-Device,
                  s - Supports-STP-Dispute
Device-ID            Local Intrfce  Hldtme Capability  Platform
Port ID
node1                Eth1/1         144    H           FAS2980
e3a
node2                Eth1/2         145    H           FAS2980
e3a
newsh2               Eth1/35        176    R S I s     N9K-C9336C
Eth1/35
newsh2               Eth1/36        176    R S I s     N9K-C9336C
Eth1/36
Total entries displayed: 4

sh2# show cdp neighbors
Capability Codes: R - Router, T - Trans-Bridge, B - Source-Route-
Bridge
                  S - Switch, H - Host, I - IGMP, r - Repeater,
                  V - VoIP-Phone, D - Remotely-Managed-Device,
                  s - Supports-STP-Dispute
```

```
Device-ID          Local Intrfce  Hldtme Capability  Platform
Port ID
node1              Eth1/1         139    H           FAS2980
e3b
node2              Eth1/2         124    H           FAS2980
eb
sh1                Eth1/35        178    R S I s     N9K-C9336C
Eth1/35
sh1                Eth1/36        178    R S I s     N9K-C9336C
Eth1/36
Total entries displayed: 4
```

15. Enable the Ethernet switch health monitor log collection feature for collecting switch-related log files, using the following commands:
    - `system switch ethernet log setup password`
    - `system switch ethernet log enable-collection`

Show example

```
cluster1::*> system switch ethernet log setup-password
Enter the switch name: <return>
The switch name entered is not recognized.
Choose from the following list:
sh1
sh2
cluster1::*> system switch ethernet log setup-password
Enter the switch name: sh1
RSA key fingerprint is
e5:8b:c6:dc:e2:18:18:09:36:63:d9:63:dd:03:d9:cc
Do you want to continue? {y|n}::[n] y
Enter the password: <enter switch password>
Enter the password again: <enter switch password>
cluster1::*> system switch ethernet log setup-password
Enter the switch name: sh2
RSA key fingerprint is
57:49:86:a1:b9:80:6a:61:9a:86:8e:3c:e3:b7:1f:b1
Do you want to continue? {y|n}:: [n] y
Enter the password: <enter switch password>
Enter the password again: <enter switch password>
cluster1::*> system  switch ethernet log enable-collection
Do you want to enable cluster log collection for all nodes in the
cluster? y|n}: [n] y
Enabling cluster switch log collection.
cluster1::*>
```

If any of these commands return an error, contact NetApp support.

16. Move the storage ports from the old switch sh2 to the new switch newsh2.
17. Verify the storage attached to HA pair 1, shared switch newsh2 is healthy.
18. Verify the storage attached to HA pair 2, shared switch newsh2 is healthy:

```
storage port show -port-type ENET
```

Show example

```
storage::*> storage port show -port-type ENET
                                     Speed
VLAN
Node    Port    Type    Mode       (Gb/s)      State     Status
ID
------- ------- ------- ---------- ----------- --------- ---------
-----
node1
        e3a     ENET    storage          100   enabled   online
30
        e3b     ENET    storage            0   enabled   offline
30
        e7a     ENET    storage            0   enabled   offline
30
        e7b     ENET    storage          100   enabled   online
30

node2
        e3a     ENET    storage          100   enabled   online
30
        e3b     ENET    storage            0   enabled   offline
30
        e7a     ENET    storage            0   enabled   offline
30
        e7b     ENET    storage          100   enabled   online
30
```

19. Verify that the shelves are correctly cabled:

```
storage shelf port show -fields remote- device,remote-port
```

Show example

```
cluster1::*> storage shelf port show -fields remote-device,remote-
port
shelf id remote-port  remote-device
----- -- ------------ ----------------------------
3.20  0  Ethernet1/13 sh1
3.20  1  Ethernet1/13 newsh2
3.20  2  Ethernet1/14 sh1
3.20  3  Ethernet1/14 newsh2
3.30  0  Ethernet1/15 sh1
3.30  1  Ethernet1/15 newsh2
3.30  2  Ethernet1/16 sh1
3.30  3  Ethernet1/16 newsh2
8 entries were displayed.
```

20. Remove the old switch sh2.
21. Repeat these steps for the switch sh1 and new switch newsh1.
22. If you suppressed automatic case creation, reenable it by invoking an AutoSupport message:

    ```
    system node autosupport invoke -node * -type all -message MAINT=END
    ```