# Configure network ports

ONTAP 9

NetApp
April 24, 2024

# Table of Contents

# Configure network ports

## Combine physical ports to create interface groups

An interface group, also known as a Link Aggregation Group (LAG), is created by combining two or more physical ports on the same node into a single logical port. The logical port provides increased resiliency, increased availability, and load sharing.

### Interface group types

Three types of interface groups are supported on the storage system: single-mode, static multimode, and dynamic multimode. Each interface group provides different levels of fault tolerance. Multimode interface groups provide methods for load balancing network traffic.

#### Characteristics of single-mode interface groups

In a single-mode interface group, only one of the interfaces in the interface group is active. The other interfaces are on standby, ready to take over if the active interface fails.

Characteristics of a single-mode interface groups:

- For failover, the cluster monitors the active link and controls failover.
  Because the cluster monitors the active link, there is no switch configuration required.
- There can be more than one interface on standby in a single-mode interface group.
- If a single-mode interface group spans multiple switches, you must connect the switches with an Inter-Switch link (ISL).
- For a single-mode interface group, the switch ports must be in the same broadcast domain.
- Link-monitoring ARP packets, which have a source address of 0.0.0.0, are sent over the ports to verify that the ports are in the same broadcast domain.

The following figure is an example of a single-mode interface group. In the figure, e0a and e1a are part of the a0a single-mode interface group. If the active interface, e0a, fails, the standby e1a interface takes over and maintains the connection to the switch.

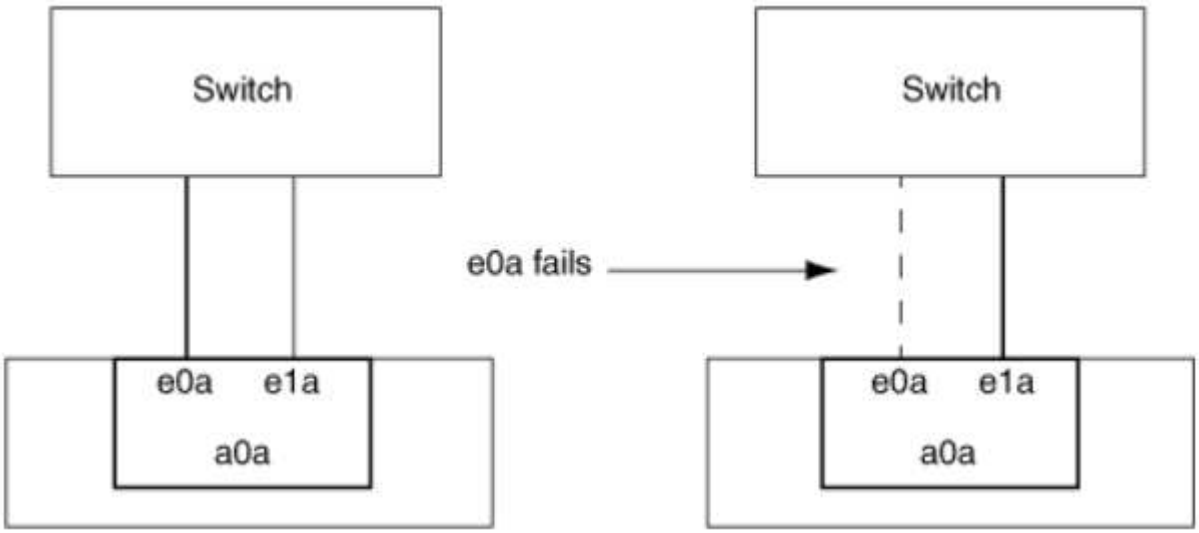

> To accomplish single-mode functionality, the recommended approach is to instead use failover groups. By using a failover group, the second port can still be used for other LIFs and need not remain unused. Additionally, failover groups can span more than two ports and can span ports on multiple nodes.

**Characteristics of static multimode interface groups**

The static multimode interface group implementation in ONTAP complies with IEEE 802.3ad (static). Any switch that supports aggregates, but does not have control packet exchange for configuring an aggregate, can be used with static multimode interface groups.

Static multimode interface groups do not comply with IEEE 802.3ad (dynamic), also known as Link Aggregation Control Protocol (LACP). LACP is equivalent to Port Aggregation Protocol (PAgP), the proprietary link aggregation protocol from Cisco.

The following are characteristics of a static multimode interface group:

- All interfaces in the interface group are active and share a single MAC address.
  - Multiple individual connections are distributed among the interfaces in the interface group.
  - Each connection or session uses one interface within the interface group.
    When you use the sequential load balancing scheme, all sessions are distributed across available links on a packet-by-packet basis, and are not bound to a particular interface from the interface group.
- Static multimode interface groups can recover from a failure of up to "n-1" interfaces, where n is the total number of interfaces that form the interface group.
- If a port fails or is unplugged, the traffic that was traversing the failed link is automatically redistributed to one of the remaining interfaces.
- Static multimode interface groups can detect a loss of link, but they cannot detect a loss of connectivity to the client or switch misconfigurations that might impact connectivity and performance.
- A static multimode interface group requires a switch that supports link aggregation over multiple switch ports.
  The switch is configured so that all ports to which links of an interface group are connected are part of a single logical port. Some switches might not support link aggregation of ports configured for jumbo frames. For more information, see your switch vendor’s documentation.
- Several load balancing options are available to distribute traffic among the interfaces of a static multimode interface group.

The following figure is an example of a static multimode interface group. Interfaces e0a, e1a, e2a, and e3a are part of the a1a multimode interface group. All four interfaces in the a1a multimode interface group are active.

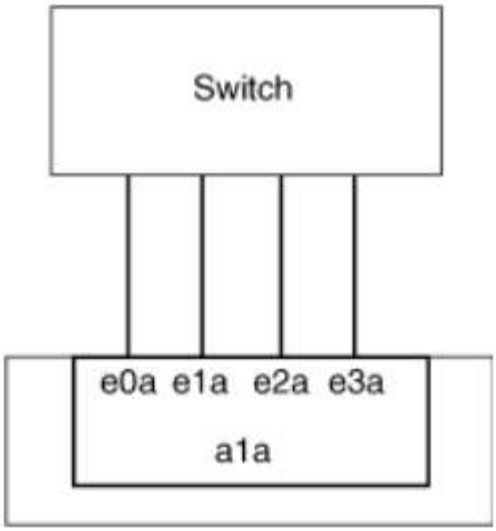


Several technologies exist that enable traffic in a single aggregated link to be distributed across multiple physical switches. The technologies used to enable this capability vary among networking products. Static multimode interface groups in ONTAP conform to the IEEE 802.3 standards. If a particular multiple switch link aggregation technology is said to interoperate with or conform to the IEEE 802.3 standards, it should operate with ONTAP.

The IEEE 802.3 standard states that the transmitting device in an aggregated link determines the physical interface for transmission. Therefore, ONTAP is only responsible for distributing outbound traffic, and cannot control how inbound frames arrive. If you want to manage or control the transmission of inbound traffic on an aggregated link, that transmission must be modified on the directly connected network device.

**Dynamic multimode interface group**

Dynamic multimode interface groups implement Link Aggregation Control Protocol (LACP) to communicate group membership to the directly attached switch. LACP enables you to detect the loss of link status and the inability of the node to communicate with the direct-attached switch port.

Dynamic multimode interface group implementation in ONTAP complies with IEEE 802.3 AD (802.1 AX). ONTAP does not support Port Aggregation Protocol (PAgP), which is a proprietary link aggregation protocol from Cisco.

A dynamic multimode interface group requires a switch that supports LACP.

ONTAP implements LACP in nonconfigurable active mode that works well with switches that are configured in either active or passive mode. ONTAP implements the long and short LACP timers (for use with nonconfigurable values 3 seconds and 90 seconds), as specified in IEEE 802.3 AD (802.1AX).

The ONTAP load balancing algorithm determines the member port to be used to transmit outbound traffic, and does not control how inbound frames are received. The switch determines the member (individual physical port) of its port channel group to be used for transmission, based on the load balancing algorithm configured in the switch’s port channel group. Therefore, the switch configuration determines the member port (individual physical port) of the storage system to receive traffic. For more information about configuring the switch, see the documentation from your switch vendor.

If an individual interface fails to receive successive LACP protocol packets, then that individual interface is marked as "lag_inactive" in the output of "ifgrp status" command. Existing traffic is automatically rerouted to any remaining active interfaces.

The following rules apply when using dynamic multimode interface groups:

- Dynamic multimode interface groups should be configured to use the port-based, IP-based, MAC-based, or round robin load balancing methods.
- In a dynamic multimode interface group, all interfaces must be active and share a single MAC address.

The following figure is an example of a dynamic multimode interface group. Interfaces e0a, e1a, e2a, and e3a are part of the a1a multimode interface group. All four interfaces in the a1a dynamic multimode interface group are active.

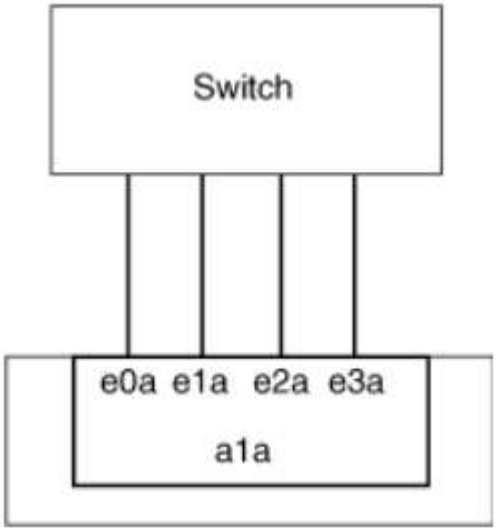


**Load balancing in multimode interface groups**

You can ensure that all interfaces of a multimode interface group are equally utilized for outgoing traffic by using the IP address, MAC address, sequential, or port-based load balancing methods to distribute network traffic equally over the network ports of a multimode interface group.

The load balancing method for a multimode interface group can be specified only when the interface group is created.

**Best Practice**: Port-based load balancing is recommended whenever possible. Use port-based load balancing unless there is a specific reason or limitation in the network that prevents it.

#### Port-based load balancing

Port-based load balancing is the recommended method.

You can equalize traffic on a multimode interface group based on the transport layer (TCP/UDP) ports by using the port-based load balancing method.

The port-based load balancing method uses a fast hashing algorithm on the source and destination IP addresses along with the transport layer port number.

#### IP address and MAC address load balancing

IP address and MAC address load balancing are the methods for equalizing traffic on multimode interface groups.

These load balancing methods use a fast hashing algorithm on the source and destination addresses (IP

address and MAC address). If the result of the hashing algorithm maps to an interface that is not in the UP link-state, the next active interface is used.

> Do not select the MAC address load balancing method when creating interface groups on a system that connects directly to a router. In such a setup, for every outgoing IP frame, the destination MAC address is the MAC address of the router. As a result, only one interface of the interface group is used.

IP address load balancing works in the same way for both IPv4 and IPv6 addresses.

#### Sequential load balancing

You can use sequential load balancing to equally distribute packets among multiple links using a round robin algorithm. You can use the sequential option for load balancing a single connection's traffic across multiple links to increase single connection throughput.

However, because sequential load balancing may cause out-of-order packet delivery, extremely poor performance can result. Therefore, sequential load balancing is generally not recommended.

## Create an interface group or LAG

You can create an interface group or LAG—single-mode, static multimode, or dynamic multimode (LACP)—to present a single interface to clients by combining the capabilities of the aggregated network ports.

The procedure you follow depends on the interface that you use—System Manager or the CLI:

**System Manager**

**Use System Manager to create a LAG**

**Steps**

1. Select **Network > Ethernet port > + Link Aggregation Group** to create a LAG.
2. Select the node from the drop-down list.
3. Choose from the following:
   a. ONTAP to **Automatically select broadcast domain (recommended)**.
   b. To manually select a broadcast domain.
4. Select the ports to form the LAG.
5. Select the mode:
   a. Single: Only one port is used at a time.
   b. Multiple: All ports can be used simultaneously.
   c. LACP: The LACP protocol determines the ports that can be used.
6. Select the load balancing:
   a. IP based
   b. MAC based
   c. Port
   d. Sequential
7. Save your changes.

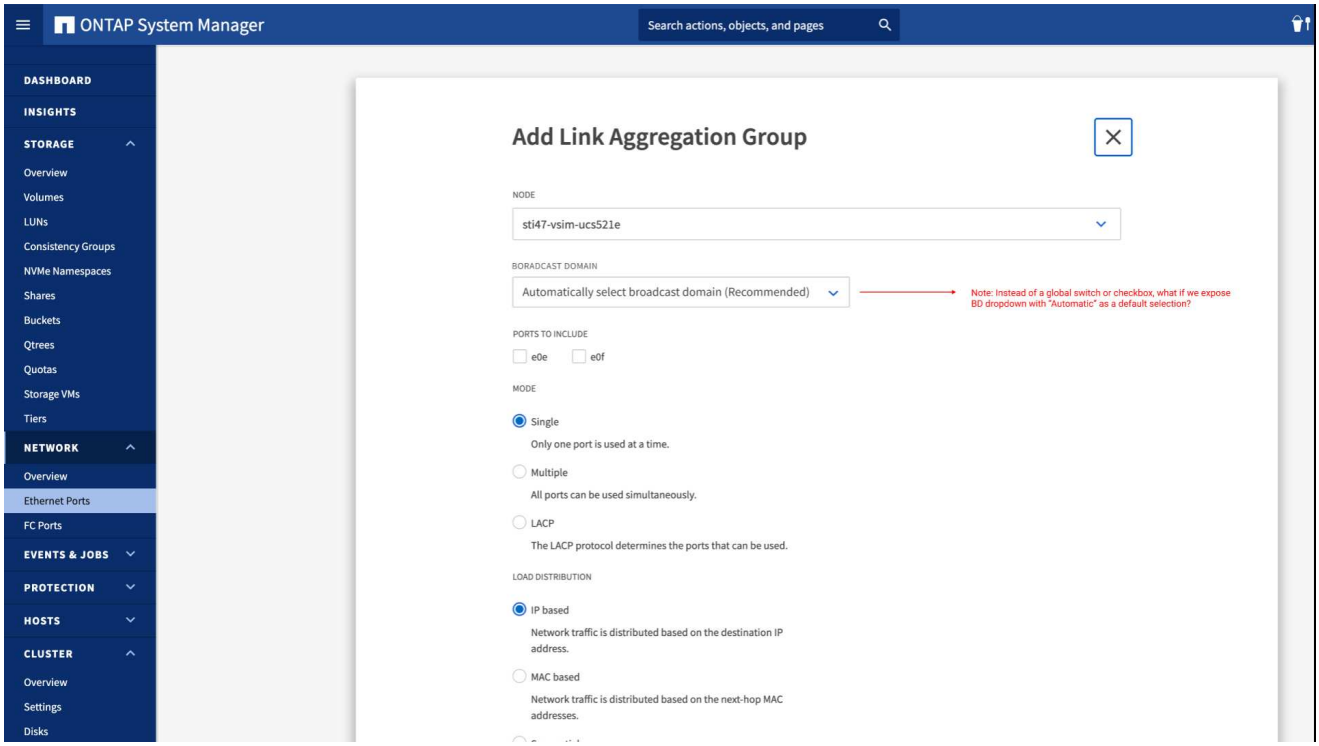


**CLI**

**Use the CLI to create an interface group**

For a complete list of configuration restrictions that apply to port interface groups, see the `network port ifgrp add-port` man page.

When creating a multimode interface group, you can specify any of the following load-balancing methods:

- `port`: Network traffic is distributed on the basis of the transport layer (TCP/UDP) ports. This is the recommended load-balancing method.
- `mac`: Network traffic is distributed on the basis of MAC addresses.
- `ip`: Network traffic is distributed on the basis of IP addresses.
- `sequential`: Network traffic is distributed as it is received.

> The MAC address of an interface group is determined by the order of the underlying ports and how these ports initialize during bootup. You should therefore not assume that the ifgrp MAC address is persistent across reboots or ONTAP upgrades.

**Step**

Use the `network port ifgrp create` command to create an interface group.

Interface groups must be named using the syntax `a<number><letter>`. For example, a0a, a0b, a1c, and a2a are valid interface group names.

For more information about this command, see ONTAP 9 commands.

The following example shows how to create an interface group named a0a with a distribution function of port and a mode of multimode:

```
network port ifgrp create -node cluster-1-01 -ifgrp a0a -distr-func port -mode multimode
```

## Add a port to an interface group or LAG

You can add up to 16 physical ports to an interface group or LAG for all port speeds.

The procedure you follow depends on the interface that you use—System Manager or the CLI:

**System Manager**

**Use System Manager to add a port to a LAG**

**Steps**

1. Select **Network > Ethernet port > LAG** to edit a LAG.
2. Select additional ports on the same node to add to the LAG.
3. Save your changes.

**CLI**

**Use the CLI to add ports to an interface group**

**Step**

Add network ports to the interface group:

```
network port ifgrp add-port
```

For more information about this command, see ONTAP 9 commands.

The following example shows how to add port e0c to an interface group named a0a:

```
network port ifgrp add-port -node cluster-1-01 -ifgrp a0a -port e0c
```

Beginning with ONTAP 9.8, interface groups are automatically placed into an appropriate broadcast domain about one minute after the first physical port is added to the interface group. If you do not want ONTAP to do this, and prefer to manually place the ifgrp into a broadcast domain, then specify the `-skip -broadcast-domain-placement` parameter as part of the `ifgrp add-port` command.

## Remove a port from an interface group or LAG

You can remove a port from an interface group that hosts LIFs, as long as it is not the last port in the interface group. There is no requirement that the interface group must not host LIFs or that the interface group must not be the home port of a LIF considering that you are not removing the last port from the interface group. However, if you are removing the last port, then you must migrate or move the LIFs from the interface group first.

**About this task**

You can remove up to 16 ports (physical interfaces) from an interface group or LAG.

The procedure you follow depends on the interface that you use—System Manager or the CLI:

**System Manager**

**Use System Manager to remove a port from a LAG**

**Steps**

1. Select **Network > Ethernet port > LAG** to edit a LAG.
2. Select the ports to remove from the LAG.
3. Save your changes.

**CLI**

**Use the CLI to remove ports from an interface group**

**Step**

Remove network ports from an interface group:

```
network port ifgrp remove-port
```

The following example shows how to remove port e0c from an interface group named a0a:

```
network port ifgrp remove-port -node cluster-1-01 -ifgrp a0a -port e0c
```

## Delete an interface group or LAG

You can delete interface groups or LAGs if you want to configure LIFs directly on the underlying physical ports or decide to change the interface group or LAG mode or distribution function.

**Before you begin**

- The interface group or LAG must not be hosting a LIF.
- The interface group or LAG must be neither the home port nor the failover target of a LIF.

The procedure you follow depends on the interface that you use—System Manager or the CLI:

**System Manager**

**Use System Manager to delete a LAG**

**Steps**

1. Select **Network > Ethernet port > LAG** to delete a LAG.
2. Select the LAG you want to remove.
3. Delete the LAG.

**CLI**

**Use the CLI to delete an interface group**

**Step**

Use the `network port ifgrp delete` command to delete an interface group.

For more information about this command, see ONTAP 9 commands.

The following example shows how to delete an interface group named a0b:

```
network port ifgrp delete -node cluster-1-01 -ifgrp a0b
```

# Configure VLANs over physical ports

You can use VLANs in ONTAP to provide logical segmentation of networks by creating separate broadcast domains that are defined on a switch port basis as opposed to the traditional broadcast domains, defined on physical boundaries.

A VLAN can span multiple physical network segments. The end-stations belonging to a VLAN are related by function or application.

For example, end-stations in a VLAN might be grouped by departments, such as engineering and accounting, or by projects, such as release1 and release2. Because physical proximity of the end- stations is not essential in a VLAN, you can disperse the end-stations geographically and still contain the broadcast domain in a switched network.

In ONTAP 9.13.1 and 9.14.1, untagged ports that are unutilized by any Logical Interfaces (LIFs) and lack native VLAN connectivity on the connected switch are marked as degraded. This is to help identify unused ports and does not indicate an outage. Native VLANs allow untagged traffic on the ifgrp base port, such as ONTAP CFM broadcasts. Configure native VLANs on the switch to prevent blocking untagged traffic.

You can manage VLANs by creating, deleting, or displaying information about them.

> You should not create a VLAN on a network interface with the same identifier as the native VLAN of the switch. For example, if the network interface e0b is on native VLAN 10, you should not create a VLAN e0b-10 on that interface.

## Create a VLAN

You can create a VLAN for maintaining separate broadcast domains within the same network domain by using System Manager or the `network port vlan create` command.

**Before you begin**

Confirm that the following requirements have been met:

- The switches deployed in the network must either comply with IEEE 802.1Q standards or have a vendor-specific implementation of VLANs.
- For supporting multiple VLANs, an end-station must be statically configured to belong to one or more VLANs.
- The VLAN is not attached to a port hosting a cluster LIF.
- The VLAN is not attached to ports assigned to the Cluster IPspace.
- The VLAN is not created on an interface group port that contains no member ports.

**About this task**

Creating a VLAN attaches the VLAN to the network port on a specified node in a cluster.

When you configure a VLAN over a port for the first time, the port might go down, resulting in a temporary disconnection of the network. Subsequent VLAN additions to the same port do not affect the port state.

> You should not create a VLAN on a network interface with the same identifier as the native VLAN of the switch. For example, if the network interface e0b is on native VLAN 10, you should not create a VLAN e0b-10 on that interface.

The procedure you follow depends on the interface that you use—System Manager or the CLI:

**System Manager**

**Use System Manager to create a VLAN**

Beginning with ONTAP 9.12.0, you can automatically select the broadcast domain or manually select on from the list. Previously, broadcast domains were always automatically selected based on layer 2 connectivity. If you manually select a broadcast domain, a warning appears indicating that manually selecting a broadcast domain could result in loss of connectivity.

**Steps**

1. Select **Network > Ethernet port > + VLAN**.
2. Select the node from the drop-down list.
3. Choose from the following:
   a. ONTAP to **Automatically select broadcast domain (recommended)**.
   b. To manually select a broadcast domain from the list.
4. Select the ports to form the VLAN.
5. Specify the VLAN ID.
6. Save your changes.

**CLI**

**Use the CLI to create a VLAN**

In certain circumstances, if you want to create the VLAN port on a degraded port without correcting the hardware issue or any software misconfiguration, then you can set the `-ignore-health-status` parameter of the `network port modify` command as `true`.

**Steps**

1. Use the `network port vlan create` command to create a VLAN.
2. You must specify either the `vlan-name` or the `port` and `vlan-id` options when creating a VLAN. The VLAN name is a combination of the name of the port (or interface group) and the network switch VLAN identifier, with a hyphen in between. For example, `e0c-24` and `e1c-80` are valid VLAN names.

The following example shows how to create a VLAN `e1c-80` attached to network port `e1c` on the node `cluster-1-01`:

```
network port vlan create -node cluster-1-01 -vlan-name e1c-80
```

Beginning with ONTAP 9.8, VLANs are automatically placed into appropriate broadcast domains about one minute after their creation. If you do not want ONTAP to do this, and prefer to manually place the VLAN into a broadcast domain, then specify the `-skip-broadcast-domain-placement` parameter as part of the `vlan create` command.

For more information about this command, see ONTAP 9 commands.

## Edit a VLAN

You can change the broadcast domain or disable a VLAN.

### Use System Manager to edit a VLAN

Beginning with ONTAP 9.12.0, you can automatically select the broadcast domain or manually select on from the list. Previously broadcast domains were always automatically selected based on layer 2 connectivity. If you manually select a broadcast domain, a warning appears indicating that manually selecting a broadcast domain could result in loss of connectivity.

### Steps

1. Select **Network > Ethernet port > VLAN**.
2. Select the edit icon.
3. Do one of the following:
    - Change the broadcast domain by selecting a different one from the list.
    - Clear the **Enabled** check box.
4. Save your changes.

## Delete a VLAN

You might have to delete a VLAN before removing a NIC from its slot. When you delete a VLAN, it is automatically removed from all of the failover rules and groups that use it.

### Before you begin

Make sure there are no LIFs associated with the VLAN.

### About this task

Deletion of the last VLAN from a port might cause a temporary disconnection of the network from the port.

The procedure you follow depends on the interface that you use—System Manager or the CLI:

**System Manager**

**Use System Manager to delete a VLAN**

**Steps**

1. Select **Network > Ethernet port > VLAN**.
2. Select the VLAN you want to remove.
3. Click **Delete**.

**CLI**

**Use the CLI to delete a VLAN**

**Step**

Use the `network port vlan delete` command to delete a VLAN.

The following example shows how to delete VLAN `e1c-80` from network port `e1c` on the node `cluster-1-01`:

```
network port vlan delete -node cluster-1-01 -vlan-name e1c-80
```

# Modify network port attributes

You can modify the autonegotiation, duplex, flow control, speed, and health settings of a physical network port.

**Before you begin**

The port that you want to modify must not be hosting any LIFs.

**About this task**

- It is not recommended to modify the administrative settings of the 100 GbE, 40 GbE, 10 GbE or 1 GbE network interfaces.

  The values that you set for duplex mode and port speed are referred to as administrative settings. Depending on network limitations, the administrative settings can differ from the operational settings (that is, the duplex mode and speed that the port actually uses).

- It is not recommended to modify the administrative settings of the underlying physical ports in an interface group.

  The `-up-admin` parameter (available at the advanced privilege level) modifies the administrative settings of the port.

- It is not recommended to set the `-up-admin` administrative setting to false for all ports on a node, or for the port that hosts the last operational cluster LIF on a node.
- It is not recommended to modify the MTU size of the management port, `e0M`.
- The MTU size of a port in a broadcast domain cannot be changed from the MTU value that is set for the broadcast domain.

- The MTU size of a VLAN cannot exceed the value of the MTU size of its base port.

**Steps**

1. Modify the attributes of a network port:

   `network port modify`

2. You can set the `-ignore-health-status` field to true for specifying that the system can ignore the network port health status of a specified port.

   The network port health status is automatically changed from degraded to healthy, and this port can now be used for hosting LIFs. You should set the flow control of cluster ports to `none`. By default, the flow control is set to `full`.

The following command disables the flow control on port e0b by setting the flow control to none:

```
network port modify -node cluster-1-01 -port e0b -flowcontrol-admin none
```

# Convert 40GbE NIC ports into multiple 10GbE ports for 10GbE connectivity

## You can convert the X1144A-R6 and the X91440A-R6 40GbE Network Interface Cards (NICs) to support four 10GbE ports.

If you are connecting a hardware platform that supports one of these NICs to a cluster that supports 10GbE cluster interconnect and customer data connections, the NIC must be converted to provide the necessary 10GbE connections.

**Before you begin**

You must be using a supported breakout cable.

**About this task**

For a complete list of platforms that support NICs, see the Hardware Universe.

> On the X1144A-R6 NIC, only port A can be converted to support the four 10GbE connections. Once port A is converted, port e is not available for use.

**Steps**

1. Enter maintenance mode.
2. Convert the NIC from 40GbE support to 10GbE support.

   ```
   nicadmin convert –m [40G | 10G] [port-name]
   ```

3. After using the convert command, halt the node.
4. Install or change the cable.
5. Depending on the hardware model, use the SP (Service Processor) or BMC (Baseboard Management

Controller) to power-cycle the node for the conversion to take effect.

# Removing a NIC from the node (ONTAP 9.8 and later)

This topic applies to ONTAP 9.8 and later. You might have to remove a faulty NIC from its slot or move the NIC to another slot for maintenance purposes.

**Steps**

1. Power down the node.
2. Physically remove the NIC from its slot.
3. Power on the node.
4. Verify that the port has been deleted:

   ```
   network port show
   ```

   ONTAP automatically removes the port from any interface groups. If the port was the only member of an interface group, the interface group is deleted.

5. If the port had any VLANs configured on it, they are displaced. You can view displaced VLANs using the following command:

   ```
   cluster controller-replacement network displaced-vlans show
   ```

   The `displaced-interface show`, `displaced-vlans show`, and `displaced-vlans restore` commands are unique and do not require the fully qualified command name, which starts with `cluster controller-replacement network`.

6. These VLANs are deleted, but can be restored using the following command:

   ```
   displaced-vlans restore
   ```

7. If the port had any LIFs configured on it, ONTAP automatically chooses new home ports for those LIFs on another port in the same broadcast domain. If no suitable home port is found on the same filer, those LIFs are considered displaced. You can view displaced LIFs using the following command:

   `displaced-interface show`

8. When a new port is added to the broadcast domain on the same node, the home ports for the LIFs are automatically restored. Alternatively, you can either set the home port using `network interface modify -home-port -home-node or use the displaced- interface restore` command.

# Removing a NIC from the node (ONTAP 9.7 or earlier)

This topic applies to ONTAP 9.7 or earlier. You might have to remove a faulty NIC from its

slot or move the NIC to another slot for maintenance purposes.

**Before you begin**

- All LIFs hosted on the NIC ports must have been migrated or deleted.
- None of the NIC ports can be the home ports of any LIFs.
- You must have advanced privileges to delete the ports from a NIC.

**Steps**

1. Delete the ports from the NIC:

   ```
   network port delete
   ```

2. Verify that the ports have been deleted:

   ```
   network port show
   ```

3. Repeat step 1, if the output of the network port show command still shows the deleted port.

# Monitor network ports

## Monitor the health of network ports

ONTAP management of network ports includes automatic health monitoring and a set of health monitors to help you identify network ports that might not be suitable for hosting LIFs.

**About this task**

If a health monitor determines that a network port is unhealthy, it warns administrators through an EMS message or marks the port as degraded. ONTAP avoids hosting LIFs on degraded network ports if there are healthy alternative failover targets for that LIF. A port can become degraded because of a soft failure event, such as link flapping (links bouncing quickly between up and down) or network partitioning:

- Network ports in the cluster IPspace are marked as degraded when they experience link flapping or loss of layer 2 (L2) reachability to other network ports in the broadcast domain.
- Network ports in non-cluster IPspaces are marked as degraded when they experience link flapping.

You must be aware of the following behaviors of a degraded port:

- A degraded port cannot be included in a VLAN or an interface group.

  If a member port of an interface group is marked as degraded, but the interface group is still marked as healthy, LIFs can be hosted on that interface group.

- LIFs are automatically migrated from degraded ports to healthy ports.
- During a failover event, a degraded port is not considered as the failover target. If no healthy ports are available, degraded ports host LIFs according to the normal failover policy.
- You cannot create, migrate, or revert a LIF to a degraded port.

  You can modify the `ignore-health-status` setting of the network port to `true`. You can then host a LIF on the healthy ports.

**Steps**

1. Log in to the advanced privilege mode:

```
set -privilege advanced
```

2. Check which health monitors are enabled for monitoring network port health:

```
network options port-health-monitor show
```

   The health status of a port is determined by the value of health monitors.

   The following health monitors are available and enabled by default in ONTAP:

   - Link-flapping health monitor: Monitors link flapping

     If a port has link flapping more than once in five minutes, this port is marked as degraded.

   - L2 reachability health monitor: Monitors whether all ports configured in the same broadcast domain have L2 reachability to each other

     This health monitor reports L2 reachability issues in all IPspaces; however, it marks only the ports in the cluster IPspace as degraded.

   - CRC monitor: Monitors the CRC statistics on the ports

     This health monitor does not mark a port as degraded but generates an EMS message when a very high CRC failure rate is observed.

3. Enable or disable any of the health monitors for an IPspace as desired by using the `network options port-health-monitor modify` command.
4. View the detailed health of a port:

```
network port show -health
```

The command output displays the health status of the port, `ignore health status` setting, and list of reasons the port is marked as degraded.

A port health status can be `healthy` or `degraded`.

If the `ignore health status` setting is `true`, it indicates that the port health status has been modified from `degraded` to `healthy` by the administrator.

If the `ignore health status` setting is `false`, the port health status is determined automatically by the system.

## Monitor the reachability of network ports (ONTAP 9.8 and later)

Reachability monitoring is built into ONTAP 9.8 and later. Use this monitoring to identify when the physical network topology does not match the ONTAP configuration. In some cases, ONTAP can repair port reachability. In other cases, additional steps are required.

### About this task

Use these commands to verify, diagnose, and repair network misconfigurations that stem from the ONTAP configuration not matching either the physical cabling or the network switch configuration.

### Step

1. View port reachability:

```
network port reachability show
```

2. Use the following decision tree and table to determine the next step, if any.

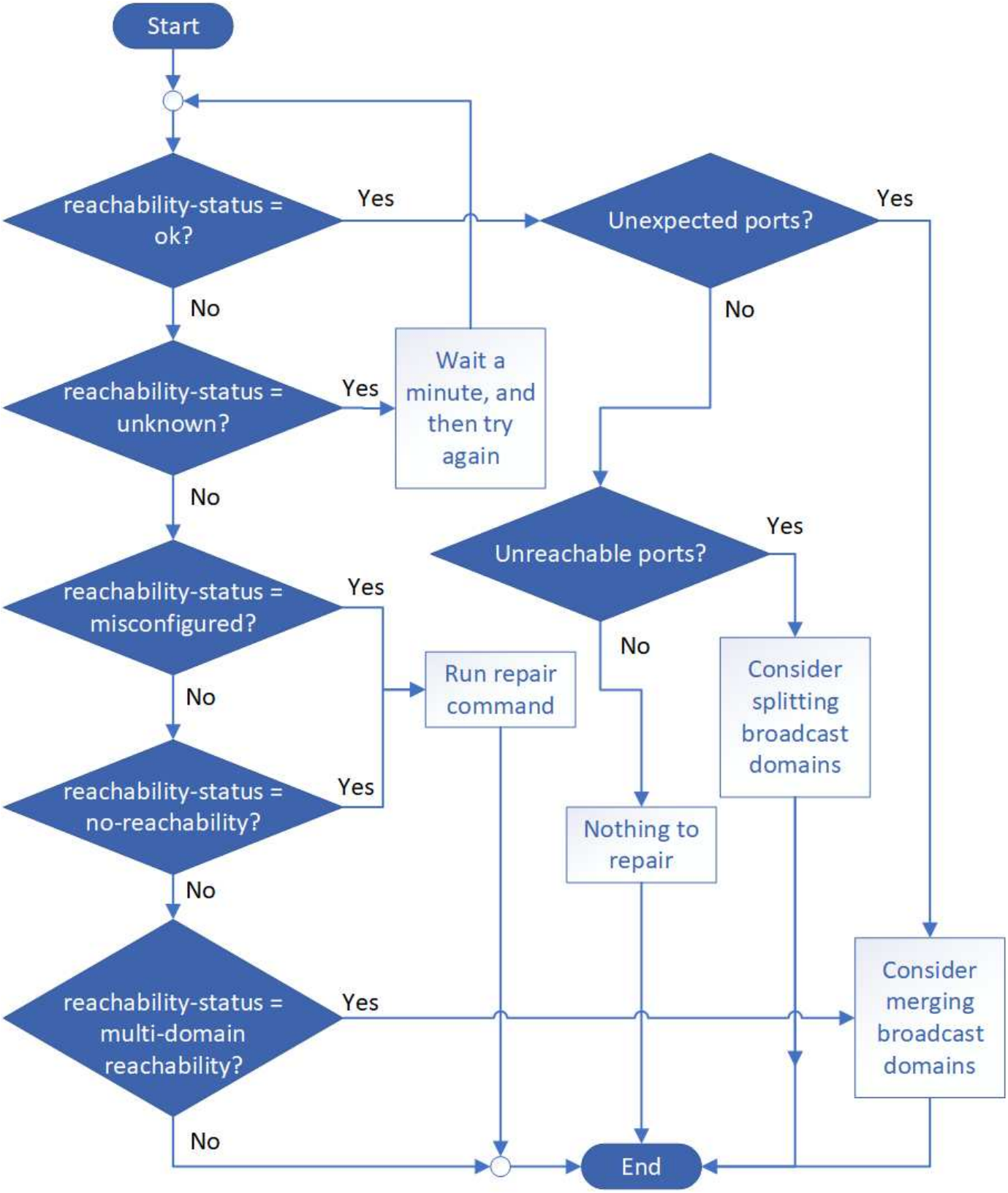


| Reachability-status | Description |
|---|---|

| | |
|---|---|
| ok | The port has layer 2 reachability to its assigned broadcast domain.<br>If the reachability-status is "ok", but there are "unexpected ports", consider merging one or more broadcast domains. For more information, see the following *Unexpected ports* row.<br><br>If the reachability-status is "ok", but there are "unreachable ports", consider splitting one or more broadcast domains. For more information, see the following *Unreachable ports* row.<br><br>If the reachability-status is "ok", and there are no unexpected or unreachable ports, your configuration is correct. |
| Unexpected ports | The port has layer 2 reachability to its assigned broadcast domain; however, it also has layer 2 reachability to at least one other broadcast domain.<br><br>Examine the physical connectivity and switch configuration to determine if it is incorrect or if the port's assigned broadcast domain needs to be merged with one or more broadcast domains.<br><br>For more information, see Merge broadcast domains. |
| Unreachable ports | If a single broadcast domain has become partitioned into two different reachability sets, you can split a broadcast domain to synchronize the ONTAP configuration with the physical network topology.<br><br>Typically, the list of unreachable ports defines the set of ports that should be split into another broadcast domain after you have verified that the physical and switch configuration is accurate.<br><br>For more information, see Split broadcast domains. |
| misconfigured-reachability | The port does not have layer 2 reachability to its assigned broadcast domain; however, the port does have layer 2 reachability to a different broadcast domain.<br><br>You can repair the port reachability. When you run the following command, the system will assign the port to the broadcast domain to which it has reachability:<br><br>`network port reachability repair -node -port`<br>For more information, see Repair port reachability. |
| no-reachability | The port does not have layer 2 reachability to any existing broadcast domain.<br><br>You can repair the port reachability. When you run the following command, the system will assign the port to a new automatically created broadcast domain in the Default IPspace:<br><br>`network port reachability repair -node -port`<br>For more information, see Repair port reachability. |

| | |
|---|---|
| multi-domain-reachability | The port has layer 2 reachability to its assigned broadcast domain; however, it also has layer 2 reachability to at least one other broadcast domain.<br><br>Examine the physical connectivity and switch configuration to determine if it is incorrect or if the port's assigned broadcast domain needs to be merged with one or more broadcast domains.<br><br>For more information, see Merge broadcast domains or Repair port reachability. |
| unknown | If the reachability-status is "unknown", then wait a few minutes and try the command again. |

After you repair a port, you need to check for and resolve displaced LIFs and VLANs. If the port was part of an interface group, you also need to understand what happened to that interface group. For more information, see Repair port reachability.

## ONTAP ports overview

A number of well-known ports are reserved for ONTAP communications with specific services. Port conflicts will occur if a port value in your storage network environment is the same as on ONTAP port.

The following table lists the TCP ports and UDP ports that are used by ONTAP.

| Service | Port/Protocol | Description |
|---|---|---|
| ssh | 22/TCP | Secure shell login |
| telnet | 23/TCP | Remote login |
| DNS | 53/TCP | Load Balanced DNS |
| http | 80/TCP | Hyper Text Transfer Protocol |
| rpcbind | 111/TCP | Remote procedure call |
| rpcbind | 111/UDP | Remote procedure call |
| ntp | 123/UDP | Network Time Protocol |
| msrpc | 135/UDP | MSRPC |
| netbios-ssn | 139/TCP | NetBIOS service session |
| snmp | 161/UDP | Simple network management protocol |
| https | 443/TCP | HTTP over TLS |
| microsoft-ds | 445/TCP | Microsoft-ds |
| mount | 635/TCP | NFS mount |
| mount | 635/UDP | NFS Mount |
| named | 953/UDP | Name daemon |
| nfs | 2049/UDP | NFS Server daemon |

| | | |
|---|---|---|
| nfs | 2049/TCP | NFS Server daemon |
| nrv | 2050/TCP | NetApp Remote Volume protocol |
| iscsi | 3260/TCP | iSCSI target port |
| lockd | 4045/TCP | NFS lock daemon |
| lockd | 4045/UDP | NFS lock daemon |
| NSM | 4046/TCP | Network Status Monitor |
| NSM | 4046/UDP | Network Status Monitor |
| rquotad | 4049/UDP | NFS rquotad protocol |
| krb524 | 4444/UDP | Kerberos 524 |
| mdns | 5353/UDP | Multicast DNS |
| HTTPS | 5986/UDP | HTTPS Port - Listening binary protocol |
| https | 8443/TCP | 7MTT GUI Tool through https |
| ndmp | 10000/TCP | Network Data Management Protocol |
| Cluster peering | 11104/TCP | Cluster peering, bi-directional |
| Cluster peering, bi-directional | 11105/TCP | Cluster peering |
| NDMP | 18600 - 18699/TCP | NDMP |
| NDMP | 30000/TCP | accept control connections over secure sockets |
| cifs witness port | 40001/TCP | cifs witness port |
| tls | 50000/TCP | Transport layer security |
| iscsi | 65200/TCP | ISCSI port |

## ONTAP internal ports

The following table lists the TCP ports and UDP ports that are used internally by ONTAP. These ports are used to establish intracluster LIF communication:

| Port/Protocol | Description |
|---|---|
| 514 | Syslog |
| 900 | NetApp Cluster RPC |
| 902 | NetApp Cluster RPC |
| 904 | NetApp Cluster RPC |
| 905 | NetApp Cluster RPC |
| 910 | NetApp Cluster RPC |
| 911 | NetApp Cluster RPC |
| 913 | NetApp Cluster RPC |

| | |
|---|---|
| 914 | NetApp Cluster RPC |
| 915 | NetApp Cluster RPC |
| 918 | NetApp Cluster RPC |
| 920 | NetApp Cluster RPC |
| 921 | NetApp Cluster RPC |
| 924 | NetApp Cluster RPC |
| 925 | NetApp Cluster RPC |
| 927 | NetApp Cluster RPC |
| 928 | NetApp Cluster RPC |
| 929 | NetApp Cluster RPC |
| 931 | NetApp Cluster RPC |
| 932 | NetApp Cluster RPC |
| 933 | NetApp Cluster RPC |
| 934 | NetApp Cluster RPC |
| 935 | NetApp Cluster RPC |
| 936 | NetApp Cluster RPC |
| 937 | NetApp Cluster RPC |
| 939 | NetApp Cluster RPC |
| 940 | NetApp Cluster RPC |
| 951 | NetApp Cluster RPC |
| 954 | NetApp Cluster RPC |
| 955 | NetApp Cluster RPC |
| 956 | NetApp Cluster RPC |
| 958 | NetApp Cluster RPC |
| 961 | NetApp Cluster RPC |
| 963 | NetApp Cluster RPC |
| 964 | NetApp Cluster RPC |
| 966 | NetApp Cluster RPC |
| 967 | NetApp Cluster RPC |
| 982 | NetApp Cluster RPC |
| 983 | NetApp Cluster RPC |
| 5125 | Alternate Control Port for disk |
| 5133 | Alternate Control Port for disk |
| 5144 | Alternate Control Port for disk |

| | |
|---|---|
| 65502 | Node scope SSH |
| 65503 | LIF Sharing |
| 7810 | NetApp Cluster RPC |
| 7811 | NetApp Cluster RPC |
| 7812 | NetApp Cluster RPC |
| 7813 | NetApp Cluster RPC |
| 7814 | NetApp Cluster RPC |
| 7815 | NetApp Cluster RPC |
| 7816 | NetApp Cluster RPC |
| 7817 | NetApp Cluster RPC |
| 7818 | NetApp Cluster RPC |
| 7819 | NetApp Cluster RPC |
| 7820 | NetApp Cluster RPC |
| 7821 | NetApp Cluster RPC |
| 7822 | NetApp Cluster RPC |
| 7823 | NetApp Cluster RPC |
| 7824 | NetApp Cluster RPC |
| 8023 | Node Scope TELNET |
| 8514 | Node Scope RSH |
| 9877 | KMIP Client Port (Internal Local Host Only) |