Maintain SG6200 hardware

StorageGRID appliances

NetApp
October 12, 2026

This PDF was generated from https://docs.netapp.com/us-en/storagegrid-appliances/sg6200/index.html on October 12, 2026. Always check docs.netapp.com for the latest.

Table of Contents

Maintain SG6200 storage appliance hardware . . . 1
- Maintain SG6200 appliance . . . 1
  - Drive firmware upgrade . . . 1
  - General Maintenance procedures . . . 1
- Maintenance configuration procedures . . . 1
  - Upgrade SANtricity (SG6260) . . . 1
  - Upgrade drive firmware using SANtricity System Manager (SG6260) . . . 7
  - Turn SGF6212 appliance or SG6200-CN controller identify LED on and off . . . 16
  - Locate SGF6212 appliance or SG6200-CN controller in data center . . . 16
  - Power SGF6212 appliance or SG6200-CN controller off and on . . . 17
  - Change link configuration of SGF6212 appliance or SG6200-CN controller . . . 20
- Hardware maintenance procedures . . . 21
  - Verify component to replace in the SGF6212 or SG6200-CN . . . 21
  - Replace fan . . . 22
  - Replace power supply . . . 27
  - Replace drive . . . 33
  - Replace NIC . . . 40
  - Replace SGF6212 or SG6200-CN CMOS batteries . . . 49
  - Replace DIMMs in storage controller shelf (SG6260) . . . 52
  - Replace battery in storage controller shelf (SG6260) . . . 58
  - Replace SGF6212 or SG6200-CN cover . . . 64
  - Add expansion shelf to deployed SG6260 . . . 65
  - Replace appliance . . . 69
  - Relocate SGF6212 or SG6200-CN in cabinet or rack . . . 81

Maintain SG6200 storage appliance hardware

Maintain SG6200 appliance

You might need to perform maintenance procedures on your appliance. Procedures specific to maintaining your SG6200 appliance are in this section.

The procedures in this section assume that the appliance has already been deployed as a Storage Node in a StorageGRID system.

Maintenance configuration procedures are performed using the Appliance Installer, Grid Manager, or BMC interface. These procedures include:

- Turn appliance identify LED on and off
- Locate appliance in data center
- Shut down the appliance
- Change link configuration of the appliance

Hardware maintenance procedures require the physical manipulation of specific SGF6212 or SG6260 components.

Drive firmware upgrade

The firmware on the drives in the and SG6260 are automatically checked every time the appliance is rebooted. When necessary, the firmware is automatically upgraded to the version expected by the current StorageGRID release. Usually, firmware upgrades occur during StorageGRID software upgrades. Any necessary drive firmware upgrades for existing StorageGRID versions will be included in hotfixes. Follow the instructions provided with each hotfix to ensure that the upgrade is applied to all drives that could benefit from it.

Additionally, the drives in the SG6260 can be updated via SANtricity using the SANtricity System Manager online or SANtricity System Manager offline procedures.

> SANtricity System Manager is not needed to maintain the SGF6212 appliance.

General Maintenance procedures

See Common maintenance procedures for procedures that are the same for all appliances, such as applying a hotfix, recovering a node or site, and performing network maintenance.

See Set up appliance hardware for appliance maintenance procedures that are also performed during initial appliance installation and configuration.

Maintenance configuration procedures

Upgrade SANtricity (SG6260)

Upgrade SANtricity OS on SG6200 storage controllers using Grid Manager

You can use the Grid Manager or maintenance mode to apply an upgrade.

Before you begin

- If you did not obtain the SANtricity OS version you want to upgrade to from NetApp Downloads: StorageGRID Appliance, you have consulted NetApp Downloads: StorageGRID Appliance or the NetApp Interoperability Matrix Tool (IMT) to confirm that the SANtricity OS version you are using for the upgrade is compatible with your appliance.
- You have the Maintenance or Root access permission.
- You are signed in to the Grid Manager using a supported web browser.
- You have the provisioning passphrase.

About this task

You can't perform other software updates (StorageGRID software upgrade or a hotfix) while a SANtricity OS upgrade is in process. If you attempt to start a hotfix or a StorageGRID software upgrade before the SANtricity OS upgrade process has finished, you are redirected to the SANtricity OS upgrade page.

The procedure will not be complete until the SANtricity OS upgrade has been successfully applied to all applicable nodes that have been selected for the upgrade. It might take more than 30 minutes to load the SANtricity OS on each node (sequentially) and up to 90 minutes to reboot each StorageGRID storage appliance. Nodes in your grid that don't use SANtricity OS will not be affected by this procedure.

> The following steps are only applicable when you are using the Grid Manager to perform the upgrade. The storage controllers in the appliance can't be upgraded using the Grid Manager when the controllers are using SANtricity OS older than 08.42.20.00 (11.42).

> This procedure will automatically upgrade the NVSRAM to the most recent version associated with the SANtricity OS upgrade. You don't need to apply a separate NVSRAM upgrade file.

> Apply the latest StorageGRID hotfix before you begin this procedure. See StorageGRID hotfix procedure for details.

Steps

1. Download the new SANtricity OS Software file from NetApp Downloads: StorageGRID Appliance.

   Choose the SANtricity OS version for your storage controllers.

2. Select **MAINTENANCE** > **System** > **Software update**.

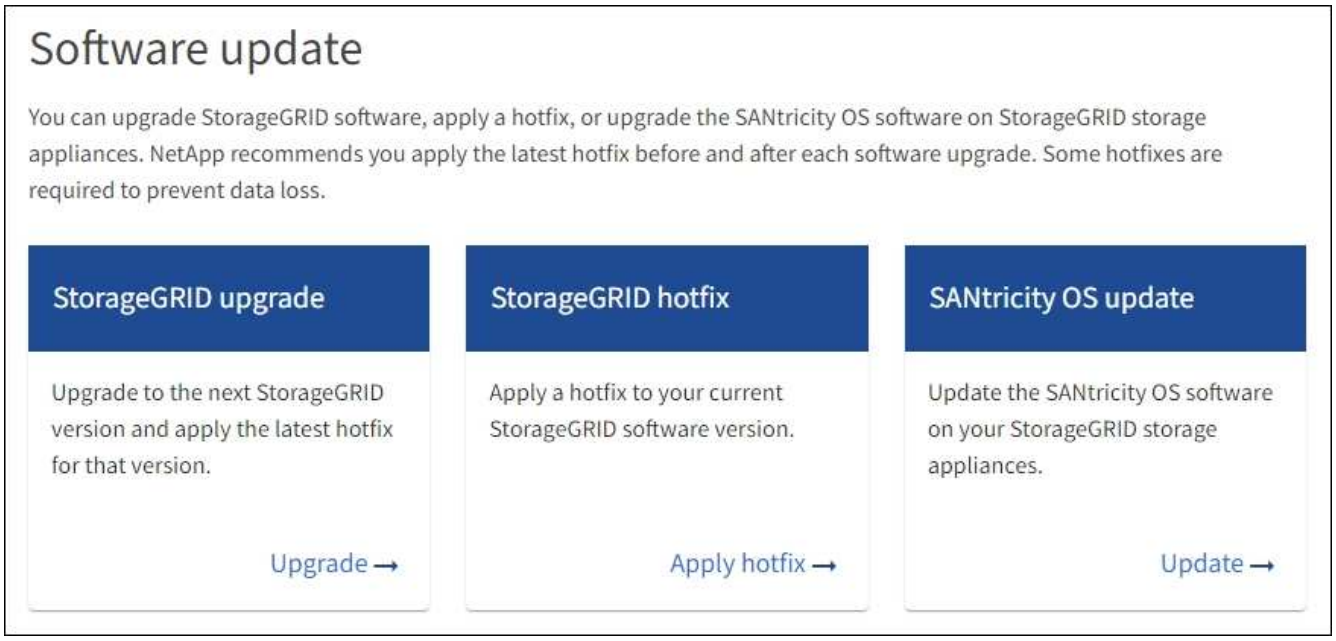

3. In the SANtricity OS update section, select **Update**.

   The SANtricity OS upgrade page appears and lists the details for each appliance node including:

   - Node name
   - Site
   - Appliance model
   - SANtricity OS version
   - Status
   - Last upgrade status

4. Review the information in the table for all of your upgradable appliances. Confirm that all storage controllers have **Nominal** status. If the status for any controller is **Unknown**, go to **Nodes** > ***appliance node*** > **Hardware** to investigate and resolve the issue.

5. Select the SANtricity OS upgrade file you downloaded from the NetApp Support Site.

   a. Select **Browse**.

   b. Locate and select the file.

   c. Select **Open**.

   The file is uploaded and validated. When the validation process is done, the file name is shown with a green check mark next to the **Browse** button. Don't change the file name because it is part of the verification process.

6. Enter the provisioning passphrase and select **Continue**.

   A warning box appears stating that your browser's connection might be lost temporarily as services on nodes that are upgraded are restarted.

7. Select **Yes** to stage the SANtricity OS upgrade file to the primary Admin Node.

   When the SANtricity OS upgrade starts:

a. The health check is run. This process checks that no nodes have the status of Needs Attention.

> If any errors are reported, resolve them and select **Start** again.

b. The SANtricity OS Upgrade Progress table appears. This table shows all Storage Nodes in your grid and the current stage of the upgrade for each node.

> The table shows all appliance Storage Nodes. Software-based Storage Nodes aren't displayed. Select **Approve** for all nodes that require the upgrade.

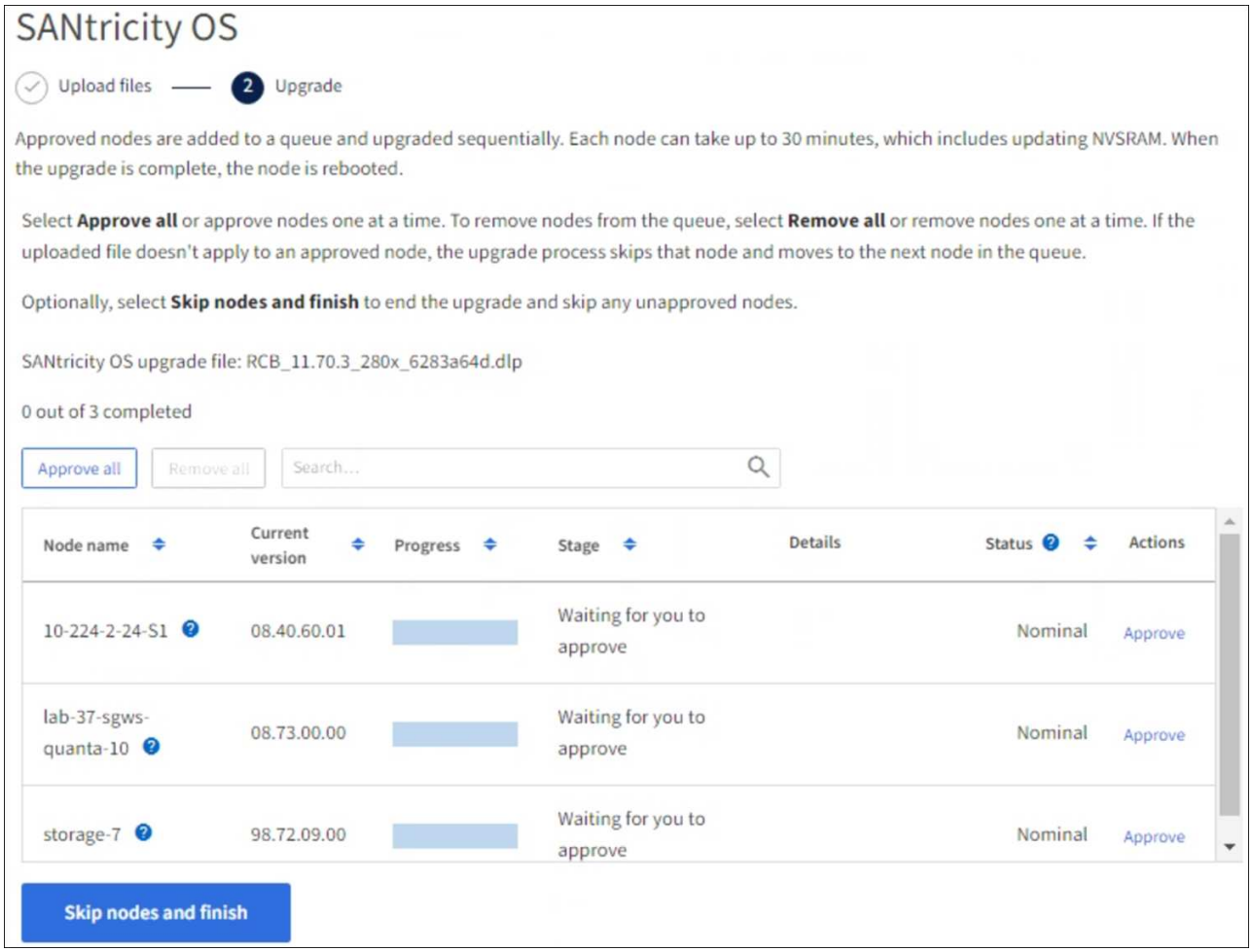

8. Optionally, sort the list of nodes in ascending or descending order by:

   - Node name
   - Current version
   - Progress
   - Stage
   - Status

   You can also enter a term in the Search box to search for specific nodes.

9. Approve the grid nodes you are ready to add to the upgrade queue. Approved nodes are upgraded one at a time.

> Don’t approve the SANtricity OS upgrade for an appliance Storage Node unless you are sure the node is ready to be stopped and rebooted. When the SANtricity OS upgrade is approved on a node, the services on that node are stopped and the upgrade process begins. Later, when the node is finished upgrading, the appliance node is rebooted. These operations might cause service interruptions for clients that are communicating with the node.

- Select the **Approve All** button to add all Storage Nodes to the SANtricity OS upgrade queue.

  > If the order in which nodes are upgraded is important, approve nodes or groups of nodes one at a time and wait until the upgrade is complete on each node before approving the next node.

- Select one or more **Approve** buttons to add one or more nodes to the SANtricity OS upgrade queue. The **Approve** button is disabled if the Status isn’t Nominal.

  After you select **Approve**, the upgrade process determines if the node can be upgraded. If a node can be upgraded, it is added to the upgrade queue.

  For some nodes, the selected upgrade file is intentionally not applied and you can complete the upgrade process without upgrading these specific nodes. Nodes intentionally not upgraded show a stage of Complete (upgrade attempted) and list the reason the node was not upgraded in the Details column.

10. If you need to remove a node or all nodes from the SANtricity OS upgrade queue, select **Remove** or **Remove All**.

    When the stage progresses beyond Queued, the **Remove** button is hidden and you can no longer remove the node from the SANtricity OS upgrade process.

11. Wait while the SANtricity OS upgrade is applied to each approved grid node.

    - If any node shows a stage of Error while the SANtricity OS upgrade is applied, the upgrade has failed for the node. With the assistance of technical support, you might need to place the appliance in maintenance mode to recover it.
    - If the firmware on the node is too old to be upgraded with the Grid Manager, the node shows a stage of Error with the details that you must use maintenance mode to upgrade SANtricity OS on the node. To resolve the error, do the following:

      a. Use maintenance mode to upgrade SANtricity OS on the node that shows a stage of Error.

      b. Use the Grid Manager to restart and complete the SANtricity OS upgrade.

    When the SANtricity OS upgrade is complete on all approved nodes, the SANtricity OS Upgrade Progress table closes and a green banner shows the number of nodes upgraded, and the date and time the upgrade completed.

12. If a node can’t be upgraded, note the reason shown in the Details column and take the appropriate action.

    > The SANtricity OS upgrade process will not be complete until you approve the SANtricity OS upgrade on all the listed Storage Nodes.

Reason	Recommended action
Storage Node was already upgraded.	No further action required.
SANtricity OS upgrade isn't applicable to this node.	The node does not have a storage controller that can be managed by the StorageGRID system. Complete the upgrade process without upgrading the node displaying this message.
SANtricity OS file isn't compatible with this node.	The node requires a SANtricity OS file different than the one you selected. After completing the current upgrade, download the correct SANtricity OS file for the node and repeat the upgrade process.

13. If you want to end approving nodes and return to the SANtricity OS page to allow for an upload of a new SANtricity OS file, do the following:
    a. Select **Skip Nodes and Finish**.

       A warning appears asking if you are sure you want to finish the upgrade process without upgrading all applicable nodes.

    b. Select **OK** to return to the **SANtricity OS** page.
    c. When you are ready to continue approving nodes, download the SANtricity OS to restart the upgrade process.

       Nodes already approved and upgraded without errors remain upgraded.

14. Repeat this upgrade procedure for nodes with a stage of Complete that require a different SANtricity OS upgrade file.

    For nodes with a status of Needs Attention, use maintenance mode to perform the upgrade.

Related information

- NetApp Interoperability Matrix Tool
- Upgrade SANtricity OS on SG6200 controllers using maintenance mode

Upgrade SANtricity OS on SG6260 storage controller using maintenance mode

You can use maintenance mode to upgrade SANtricity OS on the SG6260 controller.

For storage controllers currently using SANtricity OS newer than 08.42.20.00 (11.42), it is recommended to use Grid Manager to apply an upgrade. However, you may use the maintenance mode procedure if you prefer it or have been instructed to do so by technical support.

About this task

Don't upgrade the SANtricity OS or NVSRAM in the storage controller on more than one StorageGRID appliance at a time.

Upgrading more than one StorageGRID appliance at a time might cause data unavailability, depending on your deployment model and ILM policies.

Before you begin

- You have consulted the NetApp Interoperability Matrix Tool (IMT) to confirm that the SANtricity OS version you are using for the upgrade is compatible with your appliance.
- You must place the SG6260 controller into maintenance mode, which stops all I/O to the E4000 storage controllers.

> In rare instances, placing a StorageGRID appliance into maintenance mode might make the appliance unavailable for remote access.

Steps

1. Confirm the appliance is in maintenance mode.
2. From a service laptop, access SANtricity System Manager and sign in.
3. Download the new SANtricity OS Software file and NVSRAM file to the management client.

   > The NVSRAM is specific to the StorageGRID appliance. Don't use the standard NVSRAM download.

4. Follow the instructions in the *Upgrading SANtricity OS* guide or the SANtricity System Manager online help to upgrade the firmware and NVSRAM.

   > Activate the upgrade files immediately. Don't defer activation.

5. If this procedure completed successfully and you have additional procedures to perform while the node is in maintenance mode, perform them now. When you are done, or if you experienced any failures and want to start over, select **Advanced** > **Reboot Controller**, and then select one of these options:
   - Select **Reboot into StorageGRID**
   - Select **Reboot into Maintenance Mode** to reboot the controller with the node remaining in maintenance mode. Select this option if you experienced any failures during the procedure and want to start over. After the node finishes rebooting into maintenance mode, restart from the appropriate step in the procedure that failed.

     It can take up to 20 minutes for the appliance to reboot and rejoin the grid. To confirm that the reboot is complete and that the node has rejoined the grid, go back to the Grid Manager. The Nodes page should display a normal status (green check mark icon to the left of the node name) for the appliance node, indicating that no alerts are active and the node is connected to the grid.

Related information

Upgrade SANtricity OS on storage controllers using Grid Manager

Upgrade drive firmware using SANtricity System Manager (SG6260)

Upgrade SG6260 drive firmware automatically during appliance reboot

The StorageGRID Appliance Installer automatically installs the latest E-Series drive firmware files during appliance reboot.

E-Series drive firmware files are included in the StorageGRID software. These updates are installed automatically whenever a StorageGRID appliance reboots:

- Into maintenance mode
- As part of a rolling reboot
- During a StorageGRID version upgrade or hotfix installation
- During a SANtricity OS upgrade using maintenance mode

> The drive firmware upgrade isn't attempted for nodes with a status of Needs Attention.

> While an appliance reboots, I/O (input/output) activity to the storage controller is stopped.

You can also install drive firmware upgrades manually using the SANtricity System Manager online or offline method:

- To apply a new drive firmware upgrade before it's packaged in the StorageGRID software
- If an automatic drive firmware upgrade fails
- To use the SANtricity System Manager online drive firmware upgrade from Grid Manager instead of rebooting the node

Upgrade SG6200 drive firmware using SANtricity System Manager online method (SG6260)

Use the SANtricity System Manager online method to upgrade the firmware on the drives in your appliance to make sure you have all the latest features and bug fixes.

> This procedure does **not** apply to the NVMe SSDs in the SG6200-CN, which are updated during StorageGRID software upgrades. Only drives in the E4000 can be updated using this procedure.

About this task

The drives are upgraded one at a time while the appliance is performing I/O. This method does not require you to place the appliance in maintenance mode. However, system performance might be impacted and the upgrade might take several hours longer than the offline method.

> Drives belonging to volumes that don't have redundancy must be updated using the offline method. The offline method should be used for any pool or volume group that is currently degraded.

Before you begin

- The storage appliance has an Optimal status.
- All drives have an Optimal status.

> Don't upgrade the drive firmware on more than one StorageGRID appliance at a time. Doing so might cause data unavailability, depending on your deployment model and ILM policy.

Steps

1. Access SANtricity System Manager using one of these methods:
    - Use the StorageGRID Appliance Installer and select **Advanced** > **SANtricity System Manager**
    - Use the Grid Manager and select **Nodes** > ***Storage Node*** > **SANtricity System Manager**

- Use SANtricity System Manager by browsing to the storage controller IP:

  https://*Storage_Controller_IP*

2. Enter the SANtricity System Manager administrator username and password, if required.
3. Verify the drive firmware version currently installed in the storage appliance:
   a. From SANtricity System Manager, select **SUPPORT** > **Upgrade Center**.
   b. Under Drive Firmware upgrade, select **Begin Upgrade**.

      The Upgrade Drive Firmware page displays the drive firmware files currently installed.

   c. Note the current drive firmware revisions and drive identifiers in the Current Drive Firmware column.

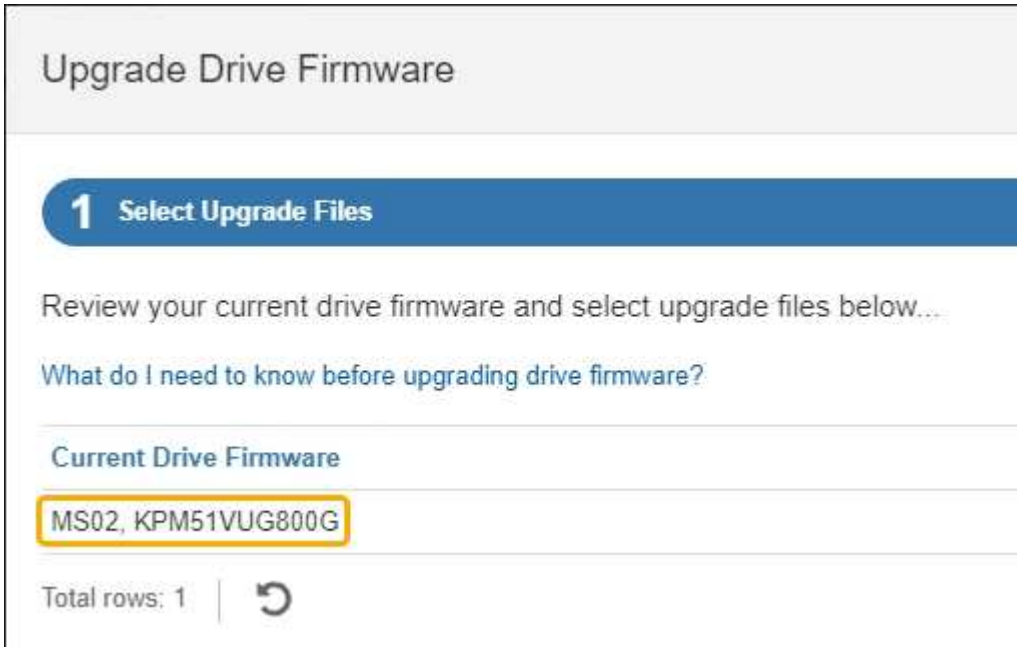

      In this example:

      - The drive firmware revision is **MS02**.
      - The drive identifier is **KPM51VUG800G**.

   d. Select **View drives** in the Associated Drives column to display where these drives are installed in your storage appliance.
   e. Close the Upgrade Drive Firmware window.
4. Download and prepare the available drive firmware upgrade:
   a. Under Drive Firmware upgrade, select **NetApp Support**.
   b. On the NetApp Support Site, select the **Downloads** tab, and then select **E-Series Disk Drive Firmware**.

      The E-Series Disk Firmware page displays.

   c. Search for each **Drive Identifier** installed in your storage appliance and verify that each drive identifier has the latest firmware revision.

      - If the firmware revision is not a link, this drive identifier has the latest firmware revision.

- If one or more drive part numbers are listed for a drive identifier, a firmware upgrade is available for these drives. You can select any link to download the firmware file.

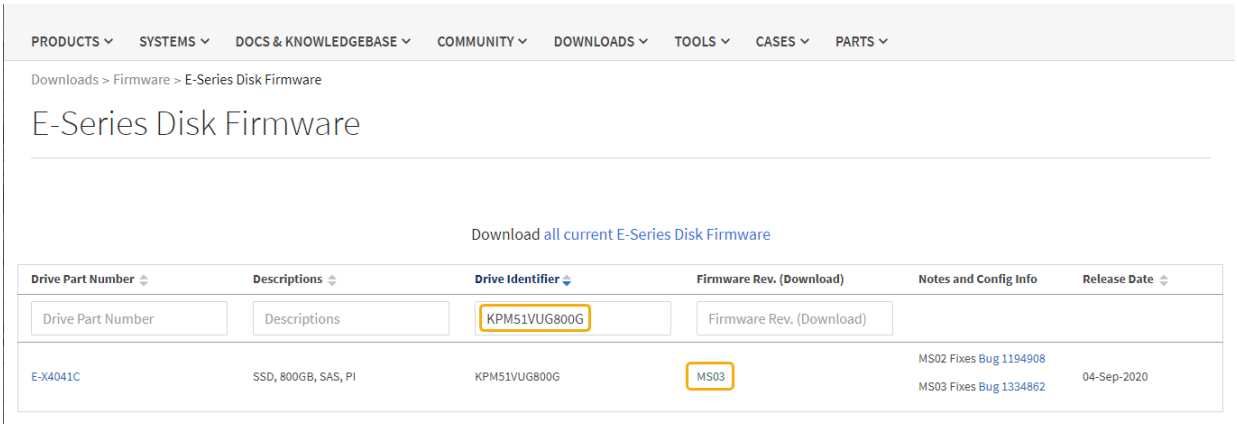

d. If a later firmware revision is listed, select the link in the Firmware Rev. (Download) column to download a `.zip` archive containing the firmware file.

e. Extract (unzip) the drive firmware archive files you downloaded from the Support site.

5. Install the drive firmware upgrade:

a. From SANtricity System Manager, under Drive Firmware upgrade, select **Begin Upgrade**.

b. Select **Browse**, and select the new drive firmware files that you downloaded from the Support site.

Drive firmware files have a filename similar to `D_HUC101212CSS600_30602291_MS01_2800_0002.dlp`.

You can select up to four drive firmware files, one at a time. If more than one drive firmware file is compatible with the same drive, you get a file conflict error. Decide which drive firmware file you want to use for the upgrade and remove the other one.

c. Select **Next**.

Select Drives lists the drives that you can upgrade with the selected firmware files.

Only drives that are compatible appear.

The selected firmware for the drive appears in the **Proposed Firmware** column. If you must change this firmware, select **Back**.

d. Select **Upgrade all drives online** — Upgrades the drives that can support a firmware download while the storage array is processing I/O. You don't have to stop I/O to the associated volumes using these drives when you select this upgrade method.

> An online upgrade can take several hours longer than an offline upgrade.

e. In the first column of the table, select the drive or drives you want to upgrade.

The best practice is to upgrade all drives of the same model to the same firmware revision.

f. Select **Start** and confirm that you want to perform the upgrade.

If you need to stop the upgrade, select **Stop**. Any firmware downloads currently in progress complete.

Any firmware downloads that have not started are canceled.

> Stopping the drive firmware upgrade might result in data loss or unavailable drives.

g. (Optional) To see a list of what was upgraded, select **Save Log**.

The log file is saved in the downloads folder for your browser with the name `latest-upgrade-log-timestamp.txt`.

If required, troubleshoot driver firmware upgrade errors.

Upgrade SG6200 drive firmware using SANtricity System Manager using offline method (SG6260)

Use the SANtricity System Manager offline method to upgrade the firmware on the drives in your appliance to make sure you have all the latest features and bug fixes.

> This procedure does **not** apply to the NVMe SSDs in the SG6200-CN, which are updated during StorageGRID software upgrades. Only drives in the E4000 can be updated using this procedure.

About this task

The drives are upgraded in parallel while the appliance is in maintenance mode. If the pool or volume group does not support redundancy or is degraded, you must use the offline method to upgrade the drive firmware. You should also use the offline method for any drive associated with flash read cache, or any pool or volume group that is currently degraded. The offline method upgrades firmware only while all I/O activity is stopped on the drives to be upgraded. To stop I/O activity, place the node into maintenance mode.

The offline method is faster than the online method and will be significantly faster when many drives in a single appliance need upgrades. However, it requires that nodes be taken out of service, which might require scheduling a maintenance window and monitoring progress. Choose the method that is the best fit for your operational procedures and the number of drives that need to be upgraded.

Before you begin

- The storage appliance has an Optimal status.
- All drives have an Optimal status.
- You have placed the StorageGRID appliance into maintenance mode.

> While the appliance is in maintenance mode, I/O (input/output) activity to the storage controllers is stopped to make disruptive storage operations safe.

> Don’t upgrade the drive firmware on more than one StorageGRID appliance at a time. Doing so might cause data unavailability, depending on your deployment model and ILM policy.

Steps

1. Confirm that the appliance is in maintenance mode.
2. Access SANtricity System Manager using one of these methods:
   - Use the StorageGRID Appliance Installer and select **Advanced** > **SANtricity System Manager**
   - Use the Grid Manager and select **Nodes** > ***Storage Node*** > **SANtricity System Manager**

- Use SANtricity System Manager by browsing to the storage controller IP:

  `https://`*`Storage_Controller_IP`*

3. Enter the SANtricity System Manager administrator username and password, if required.
4. Verify the drive firmware version currently installed in the storage appliance:
   a. From SANtricity System Manager, select **SUPPORT** > **Upgrade Center**.
   b. Under Drive Firmware upgrade, select **Begin Upgrade**.

      The Upgrade Drive Firmware page displays the drive firmware files currently installed.

   c. Note the current drive firmware revisions and drive identifiers in the Current Drive Firmware column.

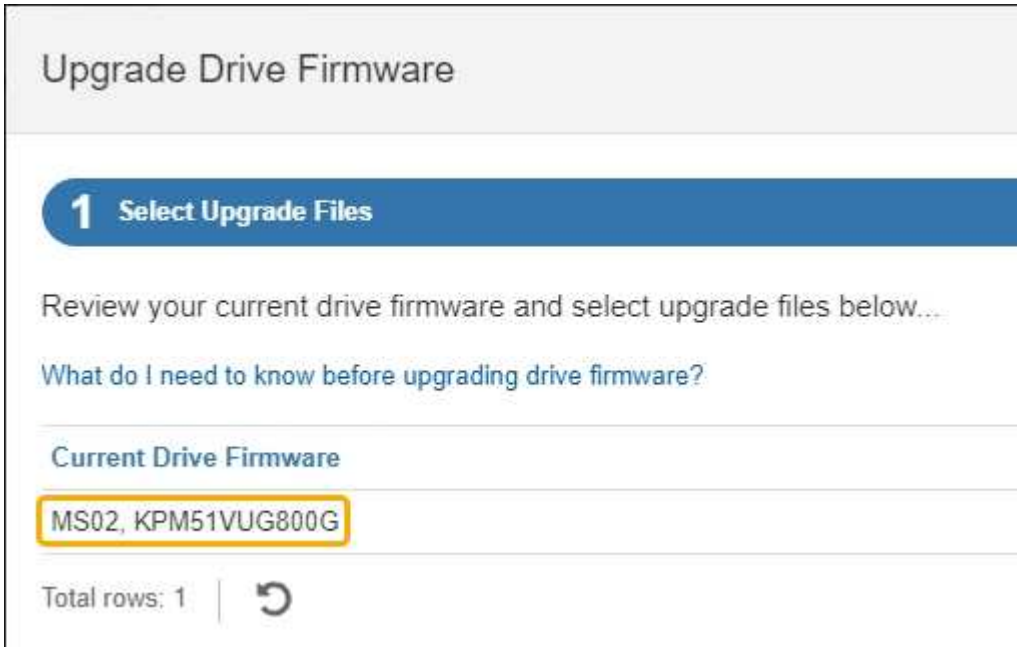

      In this example:

      - The drive firmware revision is **MS02**.
      - The drive identifier is **KPM51VUG800G**.

   d. Select **View drives** in the Associated Drives column to display where these drives are installed in your storage appliance.
   e. Close the Upgrade Drive Firmware window.
5. Download and prepare the available drive firmware upgrade:
   a. Under Drive Firmware upgrade, select **NetApp Support**.
   b. On the NetApp Support Site, select the **Downloads** tab, and then select **E-Series Disk Drive Firmware**.

      The E-Series Disk Firmware page displays.

   c. Search for each **Drive Identifier** installed in your storage appliance and verify that each drive identifier has the latest firmware revision.

      - If the firmware revision is not a link, this drive identifier has the latest firmware revision.

- If one or more drive part numbers are listed for a drive identifier, a firmware upgrade is available for these drives. You can select any link to download the firmware file.

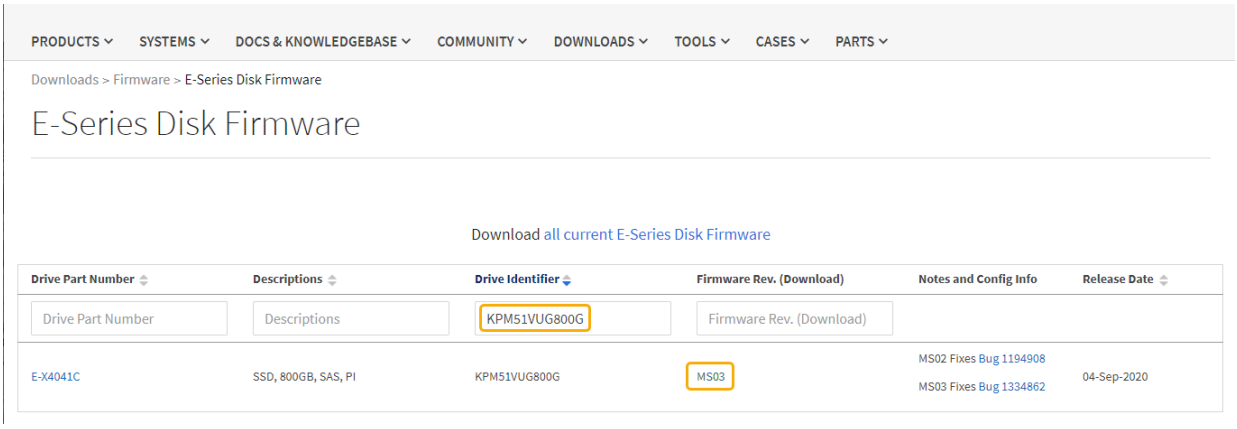

d. If a later firmware revision is listed, select the link in the Firmware Rev. (Download) column to download a `.zip` archive containing the firmware file.

e. Extract (unzip) the drive firmware archive files you downloaded from the Support site.

6. Install the drive firmware upgrade:

a. From SANtricity System Manager, under Drive Firmware upgrade, select **Begin Upgrade**.

b. Select **Browse**, and select the new drive firmware files that you downloaded from the Support site.

Drive firmware files have a filename similar to `D_HUC101212CSS600_30602291_MS01_2800_0002.dlp`.

You can select up to four drive firmware files, one at a time. If more than one drive firmware file is compatible with the same drive, you get a file conflict error. Decide which drive firmware file you want to use for the upgrade and remove the other one.

c. Select **Next**.

Select Drives lists the drives that you can upgrade with the selected firmware files.

Only drives that are compatible appear.

The selected firmware for the drive appears in the **Proposed Firmware** column. If you must change this firmware, select **Back**.

d. Select **Upgrade all drives offline (parallel)** — Upgrades the drives that can support a firmware download only while all I/O activity is stopped on any volumes that use the drives.

> You must place the appliance into maintenance mode before using this method. You should use the **Offline** method to upgrade the drive firmware.

> If you want to use the Offline (parallel) upgrade, don't proceed unless you are certain that the appliance is in maintenance mode. Failure to place the appliance into maintenance mode before initiating an offline drive firmware update might cause data loss.

e. In the first column of the table, select the drive or drives you want to upgrade.

The best practice is to upgrade all drives of the same model to the same firmware revision.

f. Select **Start** and confirm that you want to perform the upgrade.

If you need to stop the upgrade, select **Stop**. Any firmware downloads currently in progress complete. Any firmware downloads that have not started are canceled.

> Stopping the drive firmware upgrade might result in data loss or unavailable drives.

g. (Optional) To see a list of what was upgraded, select **Save Log**.

The log file is saved in the downloads folder for your browser with the name `latest-upgrade-log-timestamp.txt`.

If required, troubleshoot driver firmware upgrade errors.

7. After the procedure completes successfully, perform any additional maintenance procedures while the node is in maintenance mode. When you are done, or if you experienced any failures and want to start over, go to the StorageGRID Appliance Installer and select **Advanced** > **Reboot Controller**. Then select one of these options:
   - **Reboot into StorageGRID**.
   - **Reboot into Maintenance Mode**. Reboot the controller and keep the node in maintenance mode. Select this option if there were any failures during the procedure and you want to start over. After the node finishes rebooting into maintenance mode, restart from the appropriate step in the procedure that failed.

     It can take up to 20 minutes for the appliance to reboot and rejoin the grid. To confirm that the reboot is complete and that the node has rejoined the grid, go back to the Grid Manager. The Nodes page should display a normal status (green check mark icon to the left of the node name) for the appliance node, indicating that no alerts are active and the node is connected to the grid.

Troubleshoot drive firmware upgrade errors (SG6260)

Troubleshoot errors that can occur when using SANtricity System Manager to upgrade the firmware on the drives in your appliance.

- **Failed assigned drives**
  - One reason for the failure might be that the drive does not have the appropriate signature. Make sure that the affected drive is an authorized drive. Contact technical support for more information.
  - When replacing a drive, make sure that the replacement drive has a capacity equal to or greater than the failed drive you are replacing.
  - You can replace the failed drive while the storage array is receiving I/O.
- **Check storage array**
  - Make sure that an IP address has been assigned to each controller.
  - Make sure that all cables connected to the controller aren't damaged.
  - Make sure that all cables are tightly connected.
- **Integrated hot spare drives**

  This error condition must be corrected before you can upgrade the firmware.

- **Incomplete volume groups**

  If one or more volume groups or disk pools are incomplete, you must correct this error condition before you can upgrade the firmware.

- **Exclusive operations (other than background media/parity scan) currently running on any volume groups**

  If one or more exclusive operations are in progress, the operations must complete before the firmware can be upgraded. Use System Manager to monitor the progress of the operations.

- **Missing volumes**

  You must correct the missing volume condition before the firmware can be upgraded.

- **Either controller in a state other than Optimal**

  One of the storage array controllers needs attention. This condition must be corrected before the firmware can be upgraded.

- **Mismatched Storage Partition information between Controller Object Graphs**

  An error occurred while validating the data on the controllers. Contact technical support to resolve this issue.

- **SPM Verify Database Controller check fails**

  A storage partitions mapping database error occurred on a controller. Contact technical support to resolve this issue.

- **Configuration Database Validation (If supported by the storage array's controller version)**

  A configuration database error occurred on a controller. Contact technical support to resolve this issue.

- **MEL Related Checks**

  Contact technical support to resolve this issue.

- **More than 10 DDE Informational or Critical MEL events were reported in the last 7 days**

  Contact technical support to resolve this issue.

- **More than 2 Page 2C Critical MEL Events were reported in the last 7 days**

  Contact technical support to resolve this issue.

- **More than 2 Degraded Drive Channel Critical MEL events were reported in the last 7 days**

  Contact technical support to resolve this issue.

- **More than 4 critical MEL entries in the last 7 days**

  Contact technical support to resolve this issue.

Turn SGF6212 appliance or SG6200-CN controller identify LED on and off

The blue identify LED on the front and rear of the appliance can be turned on to help locate the appliance in a data center.

Before you begin

You have the BMC IP address of the appliance you want to identify.

Steps

1. Access the appliance BMC interface.
2. Select **Server Identify**.

   The current status of the identify LED is selected.

3. Select **ON**, **OFF**, or **BLINK**, and then select **Perform Action**.

   When you select **ON**, the blue identify LEDs light on the front and rear of the appliance.

   If a bezel is installed on the controller, it might be difficult to see the front identify LED.

   The rear identify LED is at the center of the appliance next to the Micro-SD slot.

4. Turn the identify LEDs on and off as needed.

Related information

Locate appliance in data center

Locate SGF6212 appliance or SG6200-CN controller in data center

Locate the appliance so that you can perform hardware maintenance or upgrades.

Before you begin

- You have determined which appliance requires maintenance.
- To help locate the appliance in your data center, turn on the blue identify LED.

Steps

1. Find the appliance in the data center.
   - Look for a lit blue identify LED on the front or rear of the appliance.

     The front identify LED is behind the front bezel and might be difficult to see if the bezel is installed.

The rear identify LED is at the center of the appliance next to the Micro-SD slot.

- Check the tags attached to the front of the appliance for a matching part number to confirm you have found the correct appliance.

2. Remove the front bezel, if one is installed, to access the front panel controls and indicators.

After you finish

Turn off the blue identify LED using one of the following methods if you used it to locate the appliance:

- Press the identify LED switch on the appliance front panel.
- Use the appliance BMC interface.

Power SGF6212 appliance or SG6200-CN controller off and on

You can shut down the SGF6212 appliance or SG6200-CN controller and power them back on to perform maintenance.

Shut down the SGF6212 appliance or SG6200-CN controller

Shut down the appliance to perform hardware maintenance.

About this task

To prevent service interruptions, shut down the appliance during a scheduled maintenance window when periods of service disruption are acceptable.

Before you begin

You have physically located the appliance.

Steps

1. Shut down the appliance:

> You must perform a controlled shut down of the appliance by entering the commands specified below. It is a best practice to perform a controlled shutdown when possible to avoid unnecessary alerts, ensure full logs are available, and avoid service disruptions.

a. If you have not already logged into the grid node, log in using PuTTY or another ssh client:

   i. Enter the following command: `ssh admin@grid_node_IP`

   ii. Enter the password listed in the `Passwords.txt` file.

   iii. Enter the following command to switch to root: `su -`

   iv. Enter the password listed in the `Passwords.txt` file.

   When you are logged in as root, the prompt changes from `$` to `#`.

b. Shut down the appliance:
```
shutdown -h now
```

This command might take up to 10 minutes to complete.

2. Use one of the following methods to verify that the appliance is powered off:
   - Look at the power LED on the front of the appliance and confirm that it is off.
   - Check the Power Control page of the BMC interface to confirm the appliance is off.

Power on SGF6212 or SG6200-CN and verify operation

Power on the controller after completing maintenance.

Before you begin

- You have installed the controller in a cabinet or rack and connected the data and power cables.
- You have physically located the controller in the data center.

Steps

1. Power on the appliance:
   - Option 1: Press the power switch on the front of the controller.

     You might have to remove the bezel to access the power switch; if so, remember to reinstall it afterwards.

   - Option 2: Use the controller BMC interface:
     i. Access the controller BMC interface.
     ii. Select **Power Control**.
     iii. Select **Power On** and then select **Perform Action**.

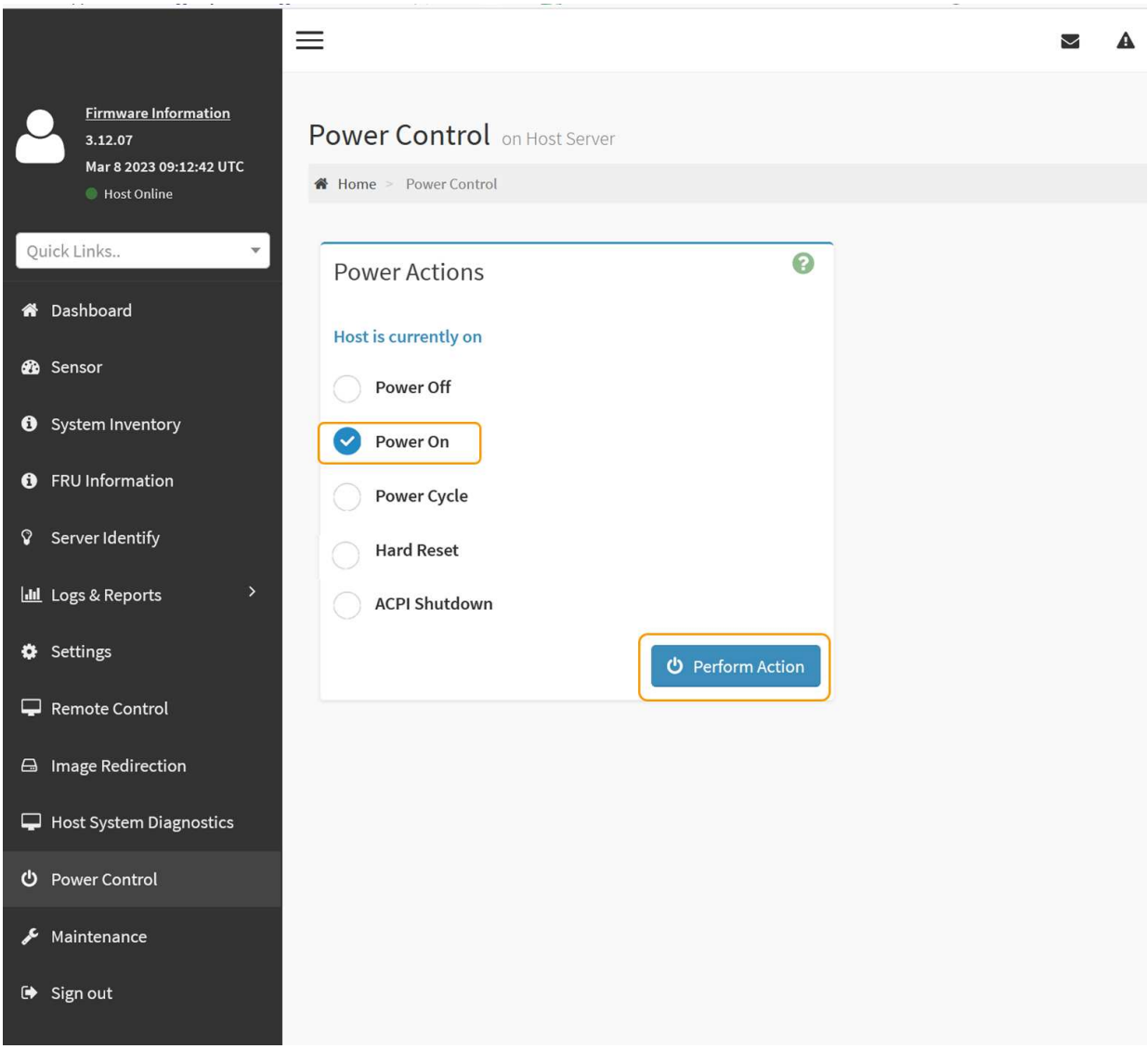

Use the BMC interface to monitor start-up status.

2. Confirm that the appliance controller displays in the Grid Manager and with no alerts.

   It might take up to 20 minutes for the controller to display in the Grid Manager.

   > Don’t take another appliance node offline unless this appliance has a green icon.

3. Confirm that the new appliance is fully operational by logging in to the grid node using PuTTY or another ssh client:

   a. Enter the following command: `ssh Appliance_IP`

   b. Enter the password listed in the `Passwords.txt` file.

   c. Enter the following command to switch to root: `su -`

   d. Enter the password listed in the `Passwords.txt` file.

   When you are logged in as root, the prompt changes from `$` to `#`.

Related information

View status indicators

Change link configuration of SGF6212 appliance or SG6200-CN controller

You can change the Ethernet link configuration of the appliance including the port bond mode, the network bond mode, and the link speed.

Before you begin

You have placed the appliance into maintenance mode.

> In rare instances, placing a StorageGRID appliance into maintenance mode might make the appliance unavailable for remote access.

Steps

1. From the StorageGRID Appliance Installer, select **Configure Networking** > **Link Configuration**.
2. Make the desired changes to the link configuration.

   For more information about the options, see Configure network links.

   > IP configuration changes made while the appliance is in maintenance mode are not applied to the installed StorageGRID environment. Run the `change-ip` command after rebooting the appliance into StorageGRID.

3. When you are satisfied with your selections, click **Save**.

   > You might lose your connection if you made changes to the network or link you are connected through. If you aren't reconnected within 1 minute, re-enter the URL for the StorageGRID Appliance Installer using one of the other IP addresses assigned to the appliance: **`https://appliance_IP:8443`**

4. Make any necessary changes to the IP addresses for the appliance.

   If you made changes to the VLAN settings, the subnet for the appliance might have changed. If you need to change the IP addresses for the appliance, see Configure StorageGRID IP addresses.

5. Select **Configure Networking** > **Ping Test** from the menu.
6. Use the Ping Test tool to check connectivity to IP addresses on any networks that might have been affected by the link configuration changes you made when configuring the appliance.

   In addition to any other tests you choose to perform, confirm that you can ping the Grid Network IP address of the primary Admin Node, and the Grid Network IP address of at least one other node. If necessary, return to the instructions for configuring network links and correct any issues.

7. After you are satisfied that your link configuration changes are working, reboot the node. From the StorageGRID Appliance Installer, select **Advanced** > **Reboot Controller**, and then select one of these options:
   - Select **Reboot into StorageGRID** to reboot the compute controller with the node rejoining the grid. Select this option if you are done working in maintenance mode and are ready to return the node to normal operation.
   - Select **Reboot into Maintenance Mode** to reboot the compute controller with the node remaining in

maintenance mode. (This option is available only when the controller is in maintenance mode.) Select this option if there are additional maintenance operations you need to perform on the node before it rejoins the grid.

It can take up to 20 minutes for the appliance to reboot and rejoin the grid. To confirm that the reboot is complete and that the node has rejoined the grid:

a. In the Grid Manager, select **Nodes**.

b. Verify that the appliance node has a normal status (green check mark icon to the left of the node name), which indicates that no alerts are active and the node is connected to the grid.

Hardware maintenance procedures

Verify component to replace in the SGF6212 or SG6200-CN

If you are unsure which hardware component to replace in your appliance, complete this procedure to identify the component and the location of the appliance in the data center.

Before you begin

- You have the serial number of the appliance where the component needs to be replaced.
- You are signed in to the Grid Manager using a supported web browser.

About this task

Use this procedure to identify the appliance with failed hardware and which of the replaceable hardware components isn't operating properly. Components that might be identified for replacement can include:

- Power supplies
- Fans
- Solid state drives (SSDs)
- Network Interface Cards (NICs)
- CMOS battery

Steps

1. Identify the failed component and the name of the appliance that it is installed in.

   a. In Grid Manager, Select **ALERTS** > **Current**.

      The Alerts page appears.

   b. Select the alert to see the alert details.

      Select the alert, not the heading for a group of alerts.

   c. Record the node name and unique identifying label of the component that has failed.

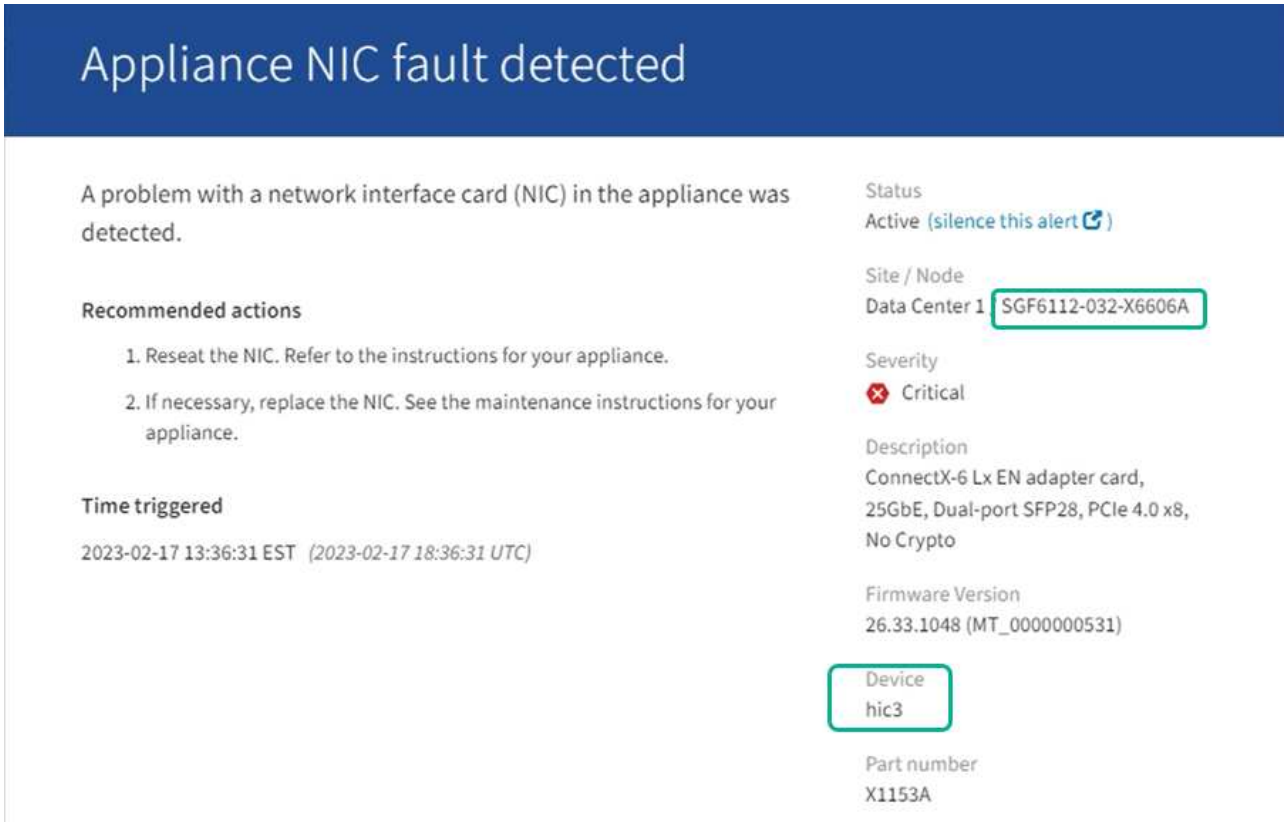

2. Identify the chassis with the component that needs to be replaced.
   a. From the Grid Manager, select **Nodes**.
   b. From the table on the Nodes page, select the StorageGRID appliance name with the failed component.
   c. Select the **Hardware** tab.

      Check the **Compute controller serial number** in the StorageGRID Appliance section. Check if the serial number matches the serial number of the storage appliance where you are replacing the component. If the serial number matches, you have found the correct appliance.

      - If the StorageGRID Appliance section in Grid Manager does not display, the node selected isn't a StorageGRID appliance. Select a different node from the tree view.
      - If the serial numbers don't match, select a different node from the tree view.
3. After you locate the node where the component needs to be replaced, write down the appliance BMC IP address listed the StorageGRID Appliance section.

   To help you locate the appliance in the data center, you can use the BMC IP address to turn on the appliance identify LED.

Related information

Turn on the appliance identify LED

Replace fan

Replace fan in an SGF6212 or SG6200-CN (SG6260)

The SGF6212 appliance and SG6200-CN controller have seven cooling fans. If one of the fans fails, you must replace it as soon as possible to ensure that the appliance has

proper cooling.

About this task

To prevent service interruptions, confirm that all other Storage Nodes are connected to the grid before starting the fan replacement or replace the fan during a scheduled maintenance window when periods of service disruption are acceptable. See the information about monitoring node connection states.

> If you have ever used an ILM rule that creates only one copy of an object, you must replace the fan during a scheduled maintenance window because you might temporarily lose access to those objects during this procedure. See information about why you should not use single-copy replication.

The appliance node will not be accessible while you replace the fan.

> Each of the two power supply units also contain a fan. The power supply fans aren't included in this procedure.

Before you begin

- You have the correct replacement fan.
- You have determined the location of the fan to replace.
- You have physically located the SGF6212 appliance or SG6200-CN controller where you are replacing the fan in the data center.

  > A controlled shutdown of the appliance is required before removing the appliance from the rack.

- You have disconnected all cables and removed the appliance cover.
- You have confirmed that the other fans are installed and running.

Steps

1. Wrap the strap end of the ESD wristband around your wrist, and secure the clip end to a metal ground to prevent static discharge.
2. Locate the fan that you need to replace.

   The seven fans are in the following positions in the chassis (front half of StorageGRID appliance with top cover removed shown):

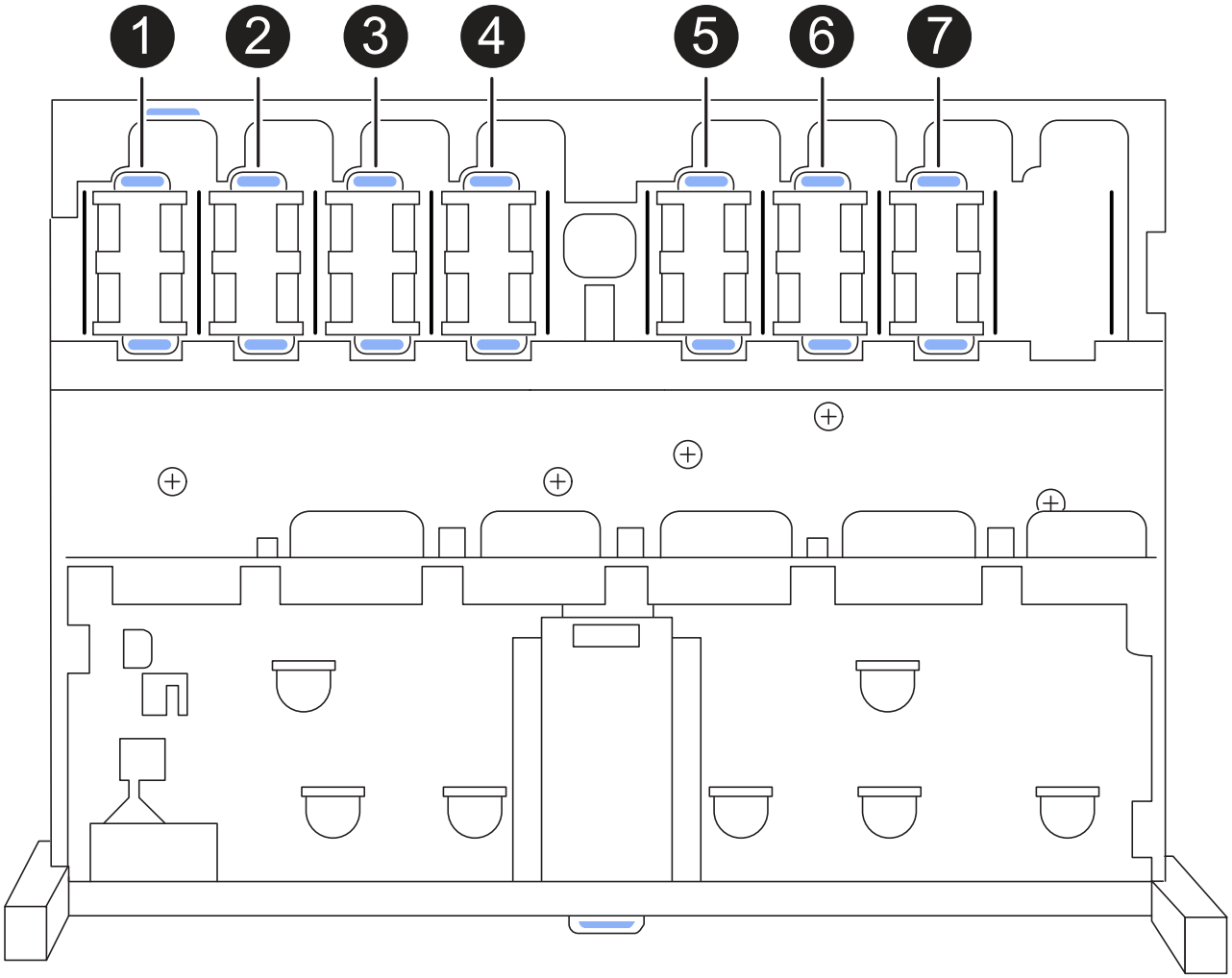

Chassis position	Fan unit
1	Fan_SYS0
2	Fan_SYS1
3	Fan_SYS2
4	Fan_SYS3
5	Fan_SYS4
6	Fan_SYS5
7	Fan_SYS6

3. Using the blue tabs on the fan, lift the failed fan out of the chassis.

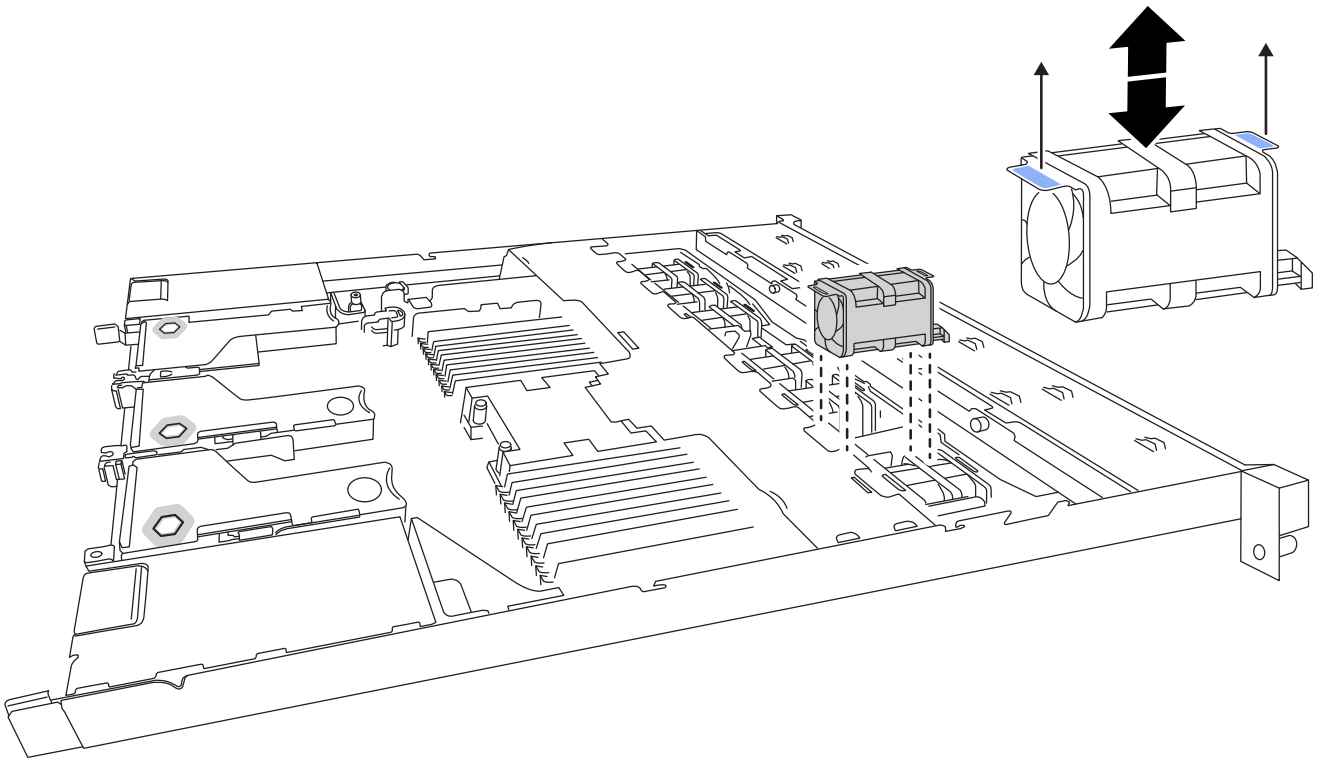

4. Slide the replacement fan into the open slot in the chassis.

   Align the connector on the fan with the socket in the circuit board.

5. Press the fan's connector firmly into the circuit board.
6. Put the top cover back on the appliance, and press the latch down to secure the cover in place.
7. Power on the appliance and monitor the appliance LEDs and boot-up codes.

   Use the BMC interface to monitor boot-up status.

8. Confirm that the appliance node appears in the Grid Manager and that no alerts appear.

After replacing the part, return the failed part to NetApp, as described in the RMA instructions shipped with the kit. See the Parts Return & Replacements page for further information.

Replace fan canister in storage controller shelf or expansion shelf (SG6260)

You can replace a fan canister in an SG6260.

About this task

Each 60-drive controller shelf or drive shelf includes two fan canisters. If a fan canister fails, you must replace it as soon as possible to ensure that the shelf has adequate cooling.

> **Possible equipment damage** — If you perform this procedure with the power turned on, you must complete it within 30 minutes to prevent the possibility of overheating the equipment.

Before you begin

- Navigate to the SANtricity System Manger tab of the Nodes page for the node(s) listed in the alert that notified you of the fan failure. Using the SANtricity UI presented on this tab, review the details in the

Recovery Guru to confirm that there is an issue with the fan canister and select **Recheck** from the Recovery Guru to ensure no other items must be addressed first.

- Check that the amber Attention LED on the fan canister is on, indicating that the fan has a fault. Contact technical support for assistance if both fan canisters in the appliance have their amber Attention LEDs on.
- Make sure you have the following:
  - A replacement fan canister (fan) that is supported for your appliance model.
  - An ESD wristband, or you have taken other antistatic precautions.

Step 1: Prepare to replace fan canister

Prepare to replace a fan canister by collecting support data about your appliance and locating the failed component.

Steps

1. Collect support data for your storage array using SANtricity System Manager.
   a. Select **Support Center > Diagnostics**.
   b. Select **Collect Support Data**.
   c. Click **Collect**.

      The file is saved in the Downloads folder for your browser with the name, **support-data.7z**.

2. From SANtricity System Manager, determine which fan canister has failed.

   a. Select **Hardware**.
   b. Look at the fan icon to the right of the **Shelf** drop-down lists to determine which appliance has the failed fan canister.

      If a component has failed, this icon is red.

   c. When you find the appliance with a red icon, select **Show back of shelf**.
   d. Select either fan canister or the red fan icon.
   e. On the **Fans** tab, look at the statuses of the fan canisters to determine which fan canister must be replaced.

      A component with a **Failed** status must be replaced.

      > If the second fan canister in the appliance does not have **Optimal** status, do not attempt to hot-swap the failed fan canister. Instead, contact technical support for assistance.

   You can also find information about the failed fan canister in the Details area of the Recovery Guru, or you can review the Event Log under Support and filter by Component Type.

3. From the back of the storage array, look at the Attention LEDs to locate the fan canister you need to remove.

   You must replace the fan canister that has its Attention LED on.

Step 2: Remove failed fan canister and install new one

Remove a failed fan canister so you can replace it with a new one.

> If you do not turn off the power to your storage array, ensure that you remove and replace the fan canister within 30 minutes to prevent the system from overheating.

Steps

1. Unpack the new fan canister, and place it on a level surface near the appliance.

   Save all packing material for use when returning the failed fan.

2. Press the orange tab to release the fan canister handle.
3. Use the fan canister handle to pull the fan canister out of the appliance.
4. Slide the replacement fan canister all the way into the appliance, and then move the fan canister handle until it latches with the orange tab.

Step 3: Complete fan canister replacement

Confirm that the new fan canister is working correctly, gather support data, and resume normal operations.

Steps

1. Check the amber Attention LED on the new fan canister.

   > After you replace the fan canister, the Attention LED stays on (solid amber) while the firmware checks that the fan canister was installed correctly. The LED goes off after this process is complete.

2. From the Recovery Guru in SANtricity System Manager, select **Recheck** to ensure the problem has been resolved.
3. If a failed fan canister is still being reported, repeat the steps in Step 2: Remove failed fan canister and install new one. If the problem persists, contact technical support.
4. Remove the antistatic protection.
5. Collect support data for your storage array using SANtricity System Manager.
   a. Select **Support Center > Diagnostics**.
   b. Select **Collect Support Data**.
   c. Click **Collect**.

      The file is saved in the Downloads folder for your browser with the name, **support-data.7z**.

6. Return the failed part to NetApp, as described in the RMA instructions shipped with the kit.

What's next?

Your fan canister replacement is complete. You can resume normal operations.

Replace power supply

Replace one or both power supplies in the SGF6212 or SG6200-CN

The SGF6212 appliance and SG6200-CN compute node have two power supplies for redundancy. If one of the power supplies fails, you must replace it as soon as possible to ensure that the appliance has redundant power. Both power supplies operating in the appliance must be of the same model and wattage.

About this task

The figure shows the location of the two power supply units. The power supplies are accessible from the back of the appliance.

+
NOTE: The image shows the SGF6212 appliance, but the power supplies are located in the same position on the SG6200-CN compute node.

Before you begin

- You have physically located the appliance with the power supply to be replaced.
- You have determined the location of the power supply to replace.
- If you are replacing only one power supply:
  - You have unpacked the replacement power supply unit and ensured that it is the same model and wattage as the power supply unit you are replacing.
  - You have confirmed that the other power supply is installed and running.
- If you are replacing both power supplies at the same time:
  - You have unpacked the replacement power supply units and ensured they are the same model and wattage.

Steps

1. If you are replacing only one power supply, you don't need to shut down the appliance. Go to the Unplug the power cord step. If you are replacing both power supplies at the same time, do the following before unplugging the power cords:
   a. Shut down the appliance.

   > If you have ever used an ILM rule that creates only one copy of an object and you are replacing both power supplies at the same time, you must replace the power supplies during a scheduled maintenance window because you might temporarily lose access to those objects during this procedure. See information about why you should not use single-copy replication.

2. Unplug the power cord from each power supply to be replaced.

   When viewed from the rear of the appliance, power supply A (PSU0) is on the right and power supply B (PSU1) is on the left.

3. Lift the handle on the first supply to be replaced.

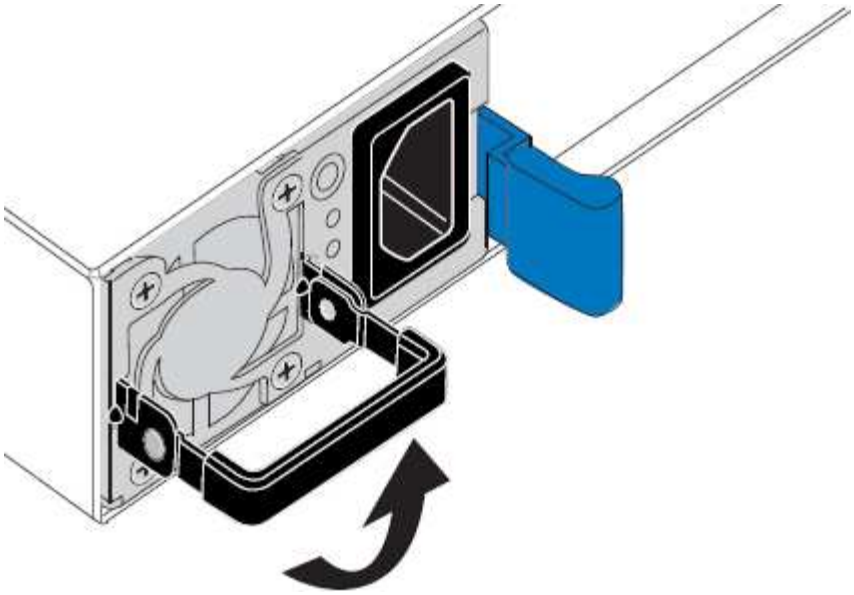

4. Press the blue latch and pull the power supply out.

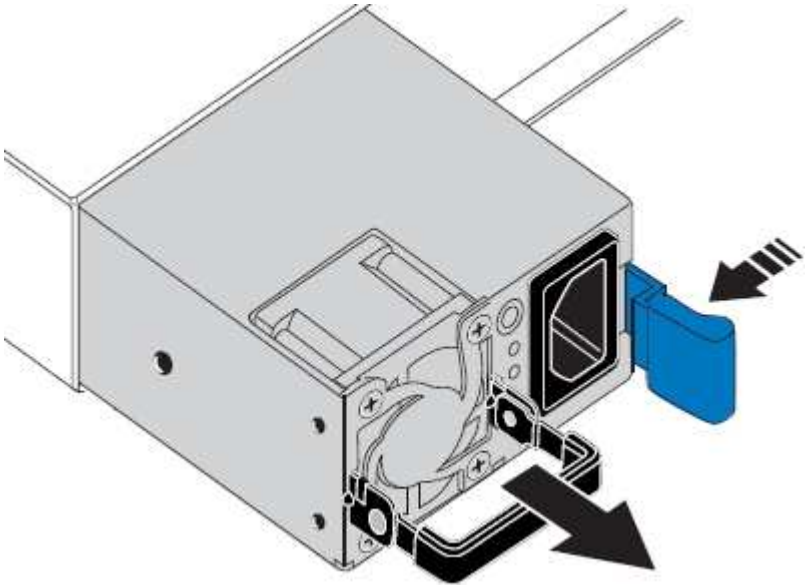

5. With the blue latch on the right, slide the replacement power supply into the chassis.

   Both installed power supplies must be the same model and wattage.

   Ensure that the blue latch is on the right side when you slide the replacement unit in.

   You will feel a click when the power supply is locked into place.

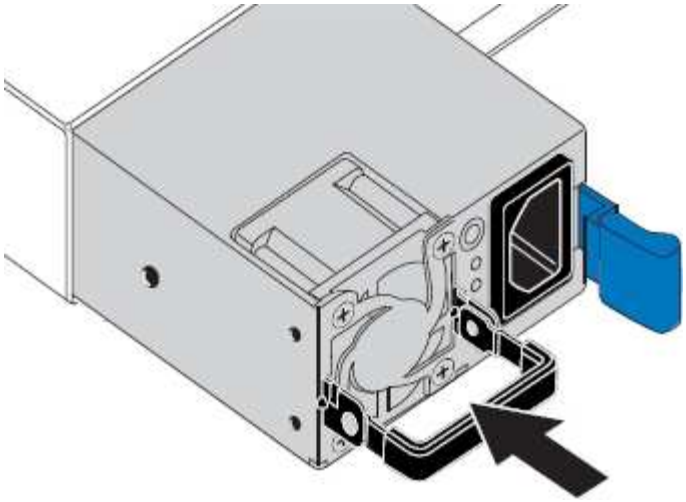

6. Push the handle back down against the body of the PSU.
7. If you are replacing both power supplies, repeat steps 2 though 6 to replace the second power supply.
8. Connect the power cords to the replaced units and apply power.

After replacing the part, return the failed part to NetApp, as described in the RMA instructions shipped with the kit. See the Parts Return & Replacements page for further information.

Replace power canister in storage controller shelf or expansion shelf (SG6260)

You can replace a power canister in an SG6260 storage controller shelf or expansion shelf (DE460C).

About this task

Each 60-drive controller shelf or drive shelf includes two power canisters for power redundancy. If a power canister fails, you must replace it as soon as possible to ensure that the shelf has a redundant power source.

You can replace a power canister while your storage array is powered on and performing host I/O operations, as long as the second power canister in the shelf has an Optimal status and the **OK to remove** field in the Details area of the Recovery Guru in SANtricity System Manager displays **Yes**.

While you perform this task, the other power canister supplies power to both fans to ensure that the equipment does not overheat.

Before you begin

- Navigate to the SANtricity System Manger tab of the Nodes page for the node(s) listed in the alert that notified you of the PSU failure. Using the SANtricity UI presented on this tab, review the details in the Recovery Guru to confirm that there is an issue with the power canister and select **Recheck** from the Recovery Guru to ensure no other items must be addressed first.
- Check that the amber Attention LED on the power canister is on, indicating that the canister has a fault. Contact technical support for assistance if both power canisters in the shelf have their amber Attention LEDs on.
- Make sure you have the following:
  - A replacement power canister that is supported for your controller shelf or drive shelf model.
  - An ESD wristband, or you have taken other antistatic precautions.

Step 1: Prepare to replace power canister

Prepare to replace a power canister in a 60-drive controller shelf or drive shelf.

Steps

1. Collect support data for your storage array using SANtricity System Manager.
   a. Select **Support › Support Center › Diagnostics**.
   b. Select **Collect Support Data**.
   c. Click **Collect**.

      The file is saved in the Downloads folder for your browser with the name, **support-data.7z**.

2. From SANtricity System Manager, determine which power canister has failed.
   a. Select **Hardware**.
   b. Look at the power icon to the right of the **Shelf** drop-down lists to determine which shelf has the failed power canister.

      If a component has failed, this icon is red.

   c. When you find the shelf with a red icon, select **Show back of shelf**.
   d. Select either power canister or the red power icon.
   e. On the **Power Supplies** tab, look at the statuses of the power canisters to determine which power canister must be replaced.

      A component with a **Failed** status must be replaced.

      > If the second power canister in the shelf does not have **Optimal** status, do not attempt to hot-swap the failed power canister. Instead, contact technical support for assistance.

      > You can also find information about the failed power canister in the Details area of the Recovery Guru, or you can review the information displayed for the shelf, or you can review the Event Log under Support and filter by Component Type.

3. From the back of the storage array, look at the Attention LEDs to locate the power canister you need to remove.

   You must replace the power canister that has its Attention LED on.

Step 2: Remove failed power canister

Remove a failed power canister so you can replace it with a new one.

Steps

1. Put on antistatic protection.
2. Unpack the new power canister, and set it on a level surface near the shelf.

   Save all packing materials for use when returning the failed power canister.

3. Turn off the power switch on the power canister that you need to remove.

4. Open the power cord retainer of the power canister that you need to remove, and then unplug the power cord from the power canister.
5. Press the orange latch on the power canister cam handle, and then open the cam handle to fully release the power canister from the mid plane.
6. Use the cam handle to slide the power canister out of the shelf.

> When removing a power canister, always use two hands to support its weight.

Step 3: Install new power canister

Install a new power canister to replace the failed one.

Steps

1. Make sure the on/off switch of the new power canister is in the Off position.
2. Using both hands, support and align the edges of the power canister with the opening in the system chassis, and then gently push the power canister into the chassis using the cam handle until it locks into place.

> Do not use excessive force when sliding the power canister into the system; you can damage the connector.

3. Close the cam handle so that the latch clicks into the locked position and the power canister is fully seated.
4. Reconnect the power cord to the power canister, and secure the power cord to the power canister using the power cord retainer.
5. Turn on the power to the new power canister.

Step 4: Complete power canister replacement

Confirm that the new power canister is working correctly, gather support data, and resume normal operations.

Steps

1. On the new power canister, check that the green Power LED is on and the amber Attention LED is OFF.
2. From the Recovery Guru in SANtricity System Manager, select **Recheck** to ensure the problem has been resolved.
3. If a failed power canister is still being reported, repeat the steps in Step 2: Remove failed power canister and in Step 3: Install new power canister. If the problem continues to persist, contact technical support.
4. Remove the antistatic protection.
5. Collect support data for your storage array using SANtricity System Manager.
   a. Select **Support › Support Center › Diagnostics**.
   b. Select **Collect Support Data**.
   c. Click **Collect**.

      The file is saved in the Downloads folder for your browser with the name, **support-data.7z**.
6. Return the failed part to NetApp, as described in the RMA instructions shipped with the kit.

What's next?

Your power canister replacement is complete. You can resume normal operations.

Replace drive

Replace drives in the SGF6212

The SGF6212 storage appliance contains 12 SSD drives. For an SGF6212 operating as a storage node, data on the drives is protected by a RAID scheme that enables the appliance to recover from any single drive failure without having to copy data from another node. For an SGF6212 operating as a gateway node, a single drive failure results in a reduction in cache capacity.

If the SGF6212 is operating as a storage node, the failure of a second drive before an initial drive failure has been corrected might require data be copied from other nodes to restore redundancy. This restoration of redundancy can take longer, and might be impossible, if single-copy ILM rules are in use or were used in the past, or if data redundancy has been impacted by failures on other nodes. Therefore, if one of the SGF6212 drives fails, you must replace it as soon as possible to ensure redundancy.

If the SGF6212 is operating as a gateway node, each drive failure in a SGF6212 results in a further reduction in cache capacity. In addition, any cached data on the failed drive will no longer be cached. Additional drive failures may result in a failure of the operating system, so you must replace a failed drive as soon as possible to ensure availability.

> If three or more drives fail, the node may become unable to run StorageGRID. It will leave the grid, reboot, and launch the StorageGRID Appliance Installer to facilitate diagnosis and repair of the storage issue.

Before you begin

- You have physically located the appliance.
- You have verified which drive has failed by noting that the drive's left LED is solid amber or using the Grid Manager to view the alert caused by the failed drive.

  > See the information about viewing status indicators to verify the failure.

- You have obtained the replacement drive.
- You have obtained proper ESD protection.

Steps

1. Verify that the drive's left fault LED is amber or use the drive slot ID from the alert to locate the drive.

   The twelve drives are in the following positions in the chassis (front of chassis with bezel removed shown):

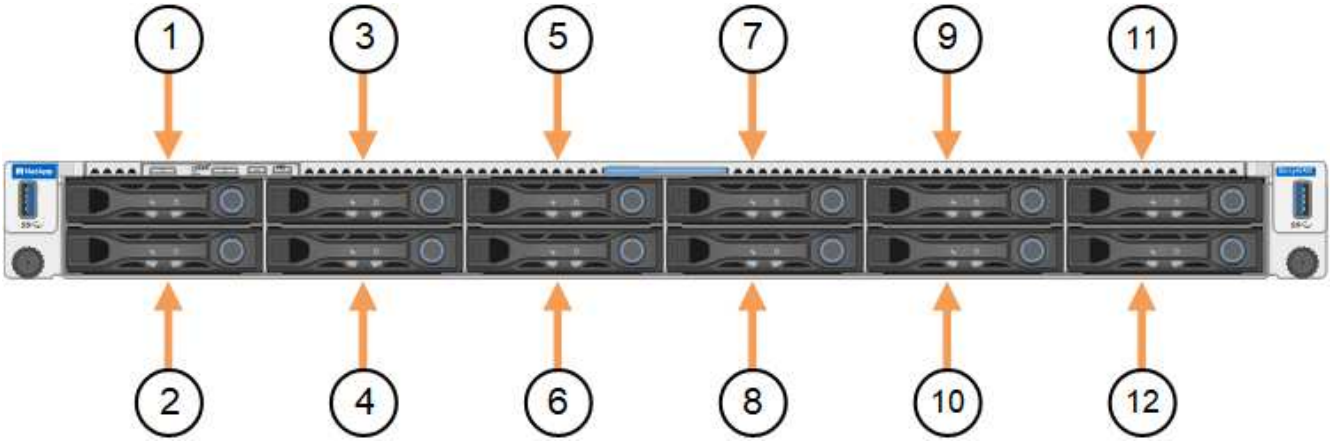

Position	Drive
1	HDD00
2	HDD01
3	HDD02
4	HDD03
5	HDD04
6	HDD05
7	HDD06
8	HDD07
9	HDD08
10	HDD09
11	HDD10
12	HDD11

You can also use the Grid Manager to monitor the status of the SSD drives. Select **Nodes**. Then select `Storage Node` > **Hardware**. If a drive has failed, the Storage RAID Mode field contains a message about which drive has failed.

2. Wrap the strap end of the ESD wristband around your wrist, and secure the clip end to a metal ground to prevent static discharge.
3. Unpack the replacement drive, and set it on a static-free, level surface near the appliance.

   Save all packing materials.

4. Press the release button on the failed drive.

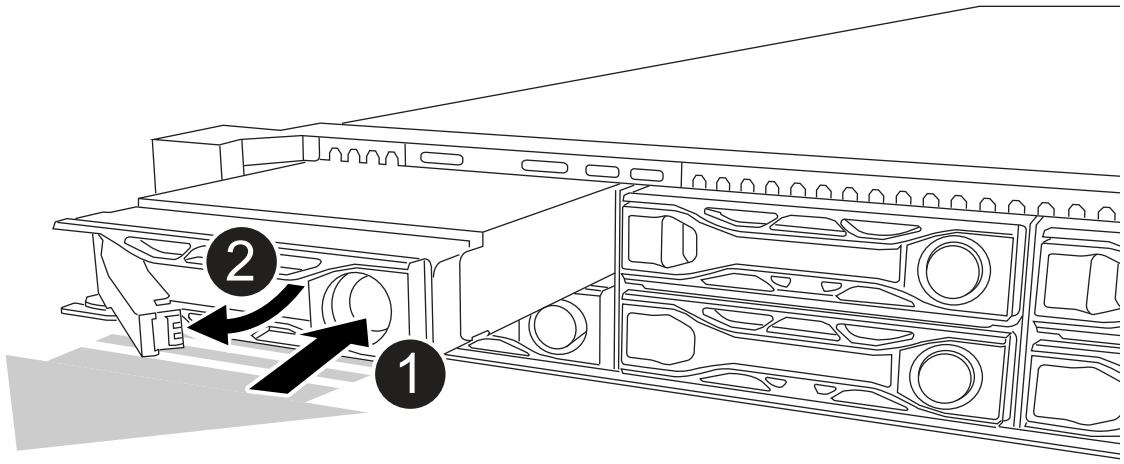

The handle on the drive springs open partially, and the drive releases from the slot.

5. Open the handle, slide the drive out, and place it on a static-free, level surface.
6. Press the release button on the replacement drive before you insert it into the drive slot.

   The latch springs open.

7. Insert the replacement drive in the slot, and then close the drive handle.

   > Don't use excessive force while closing the handle.

   When the drive is fully inserted, you hear a click.

   The replaced drive is automatically rebuilt with mirrored data from the working drives. The drive LED should blink initially, but then stop blinking as soon as the system determines that the drive has enough capacity and is functional.

   You can check the status of the rebuild by using the Grid Manager.

8. If the SGF6212 is operating as a storage node and more than one drive has failed and been replaced, you might have alerts indicating that some volumes need to have data restored to them. If you receive an alert, before attempting volume recovery, select **Nodes** > **`appliance Storage Node`** > **Hardware**. In the StorageGRID Appliance section of the page, verify that the Storage RAID mode is healthy or rebuilding. If the status lists one or more failed drives, correct this condition before attempting volume restoration.
9. In the Grid Manager, go to **Nodes** > **`appliance Storage Node`** > **Hardware**. In the StorageGRID Appliance section of the page, verify that the Storage RAID mode is healthy.

After replacing the part, return the failed part to NetApp, as described in the RMA instructions shipped with the kit. See the Parts Return & Replacements page for further information.

Replace drive in SG6200-CN

The SG6260 appliance contains two SSD drives in the SG6200-CN controller which function as a read cache. If one of these drives fails, you must replace it as soon as possible to minimize the potential performance impact.

Before you begin

- You have physically located the appliance.
- You have verified which drive has failed by noting that its left LED is solid amber or using Grid Manager to view the alert caused by the failed drive.
- You have obtained the replacement drive.
- You have obtained proper ESD protection.

Steps

1. Verify that the drive's left fault LED is amber or use the drive slot ID from the alert to locate the drive.

   The drives are in the following positions in the chassis (front of chassis with bezel removed shown).

2. Wrap the strap end of the ESD wristband around your wrist, and secure the clip end to a metal ground to prevent static discharge.
3. Unpack the replacement drive, and set it on a static-free, level surface near the appliance.

   Save all packing materials.

4. Press the release button on the failed drive.

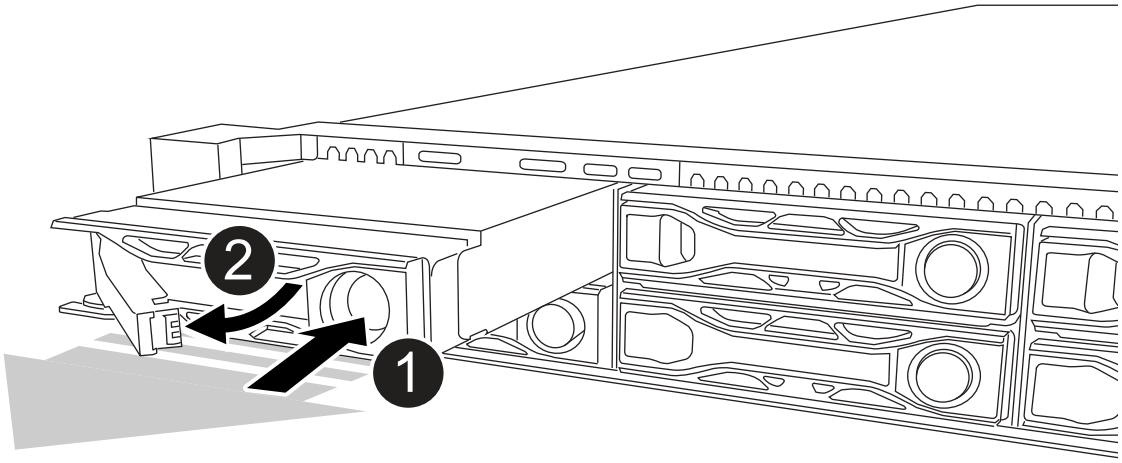

   The handle on the drive springs open partially, and the drive releases from the slot.

5. Open the handle, slide the drive out, and place it on a static-free, level surface.
6. Press the release button on the replacement drive before you insert it into the drive slot.

   The latch springs open.

7. Insert the replacement drive in the slot, and then close the drive handle.

   ! Don't use excessive force while closing the handle.

   When the drive is fully inserted, you hear a click.

When both SSD drives are functioning normally, the system will automatically restore read-cache functionality. You can run diagnostics to monitor the read-cache hit rate. Since the cache was just rebuilt, the hit rate might be low initially but should increase over time as the cache is repopulated by clients accessing object data.

After replacing the part, return the failed part to NetApp, as described in the RMA instructions shipped with the kit. See the Parts Return & Replacements page for further information.

Replace drive in storage controller shelf or expansion shelf (SG6260)

You can replace a drive in an SG6260 storage controller shelf or expansion shelf (DE460C).

About this task

StorageGRID Grid Manager monitors storage array status and raises alerts when drive failures occur. When Grid Manager raises an alert, or at any time, you can use the Recovery Guru in SANtricity System Manager to get more information about the specific drive that has failed. When a drive has failed, its amber Attention LED is on. You can hot-swap a failed drive while the storage array is receiving I/O.

Before you begin

- Review the drive handling requirements.
- Make sure you have the following:
  - A replacement drive that is supported by NetApp for your controller shelf or drive shelf.
  - An ESD wristband, or you have taken other antistatic precautions.
  - Access to SANtricity System Manager:
    - From Grid Manager, select **Nodes** > ***appliance node*** > **SANtricity System Manager**. Controller information is on the SANtricity System Manager tab.
    - Point a browser in your management station to the controller's domain name or IP address.

Step 1: Prepare to replace drive

Prepare to replace a drive by checking the Recovery Guru in SANtricity System Manager and completing any prerequisite steps. Then, you can locate the failed component.

Steps

1. If the Recovery Guru in SANtricity System Manager has notified you of an *impending drive failure*, but the drive has not yet failed, follow the instructions in the Recovery Guru to fail the drive.
2. If needed, use SANtricity System Manager to confirm you have a suitable replacement drive.
   a. Select **Hardware**.
   b. Select the failed drive on the shelf graphic.
   c. Click the drive to display its context menu, and then select **View settings**.
   d. Confirm that the replacement drive has a capacity equal to or greater than the drive you are replacing and that it has the features you expect.
3. If needed, use SANtricity System Manager to locate the drive within the storage array.
   a. If the shelf has a bezel, remove it so you can see the LEDs.
   b. From the drive's context menu, select **Turn on locator light**.

The drive drawer's Attention LED (amber) blinks so you can open the correct drive drawer to identify which drive to replace.

4. Unlatch the drive drawer by pulling on both levers.
   a. Using the extended levers, carefully pull the drive drawer out until it stops.
   b. Look at the top of the drive drawer to find the Attention LED in front of each drive.

      The drive drawer Attention LEDs are on the left side in front of each drive, with an attention icon on the drive handle just behind the LED.

Step 2: Remove failed drive

Remove a failed drive to replace it with a new one.

Steps

1. Unpack the replacement drive, and set it on a flat, static-free surface near the shelf.

   Save all packing materials for the next time you need to send a drive back.

2. Release the drive drawer levers from the center of the appropriate drive drawer by pulling both towards the sides of the drawer.
3. Carefully pull on the extended drive drawer levers to pull out the drive drawer to its full extension without removing it from the enclosure.
4. Gently pull back the orange release latch that is in front of the drive you want to remove.

   The cam handle on the drive springs open partially, and the drive is released from the drawer.

5. Open the cam handle, and lift out the drive slightly.
6. Wait 30 seconds.
7. Use the cam handle to lift the drive from the shelf.
8. Place the drive on an antistatic, cushioned surface away from magnetic fields.
9. Wait 30 seconds for the software to recognize that the drive has been removed.

> If you accidentally remove an active drive, wait at least 30 seconds, and then reinstall it. For the recovery procedure, refer to the storage management software.

Step 3: Install new drive

Install a new drive to replace the failed one.

> Install the replacement drive as soon as possible after removing the failed drive. Otherwise, there is a risk that the equipment might overheat.

> **Possible loss of data access** — When pushing the drive drawer back into the enclosure, never slam the drawer shut. Push the drawer in slowly to avoid jarring the drawer and causing damage to the storage array.

Steps

1. Raise the cam handle on the new drive to vertical.

2. Align the two raised buttons on each side of the drive carrier with the matching gap in the drive channel on the drive drawer.
3. Lower the drive straight down, and then rotate the cam handle down until the drive snaps into place under the orange release latch.
4. Carefully push the drive drawer back into the enclosure. Push the drawer in slowly to avoid jarring the drawer and causing damage to the storage array.
5. Close the drive drawer by pushing both levers towards the center.

   The green Activity LED for the replaced drive on the front of the drive drawer comes on when the drive is inserted correctly.

   Depending on your configuration, the controller might automatically reconstruct data to the new drive. If the shelf uses hot spare drives, the controller might need to perform a complete reconstruction on the hot spare before it can copy the data to the replaced drive. This reconstruction process increases the time that is required to complete this procedure.

Step 4: Complete drive replacement

Confirm that the new drive is working correctly.

Steps

1. Check the Power LED and the Attention LED on the drive you replaced. (When you first insert a drive, its Attention LED might be on. However, the LED should go off within a minute.)
   - Power LED is on or blinking, and the Attention LED is off: Indicates that the new drive is working correctly.
   - Power LED is off: Indicates that the drive might not be installed correctly. Remove the drive, wait 30 seconds, and then reinstall it.
   - Attention LED is on: Indicates that the new drive might be defective. Replace it with another new drive.
2. If the Recovery Guru in SANtricity System Manager still shows an issue, select **Recheck** to ensure the problem has been resolved.
3. If the Recovery Guru indicates that drive reconstruction did not start automatically, start reconstruction manually, as follows:

   > Perform this operation only when instructed to do so by technical support or the Recovery Guru.

   a. Select **Hardware**.
   b. Click the drive that you replaced.
   c. From the drive's context menu, select **Reconstruct**.
   d. Confirm that you want to perform this operation.

      When the drive reconstruction completes, the volume group is in an Optimal state.
4. As required, reinstall the bezel.
5. Return the failed part to NetApp, as described in the RMA instructions shipped with the kit.

What's next?

Your drive replacement is complete. You can resume normal operations.

Replace NIC

Replace internal NIC in the SGF6212 or SG6200-CN

You might need to replace an internal Network Interface Card (NIC) in the SGF6212 or SG6200-CN if it is not functioning optimally or if it has failed.

About this task

To prevent service interruptions, confirm that all other Storage Nodes are connected to the grid before starting the Network Interface Card (NIC) replacement or replace the NIC during a scheduled maintenance window when periods of service disruption are acceptable. See the information about monitoring node connection states.

> If you have ever used an ILM rule that creates only one copy of an object, you must replace the NIC during a scheduled maintenance window because you might temporarily lose access to those objects during this procedure. See information about why you should not use single-copy replication.

Before you begin

- You have the correct replacement NIC.
- You have physically located the SGF6212 appliance or SG6200-CN controller where you are replacing the NIC in the data center.

  > A controlled shutdown of the appliance is required before removing the appliance from the rack.

- You have disconnected all cables and removed the appliance cover.
- You have determined the location of the NIC to replace.

  The three NICs in the appliance are in three riser assemblies in the following positions in the chassis (rear of appliance with top cover removed shown):

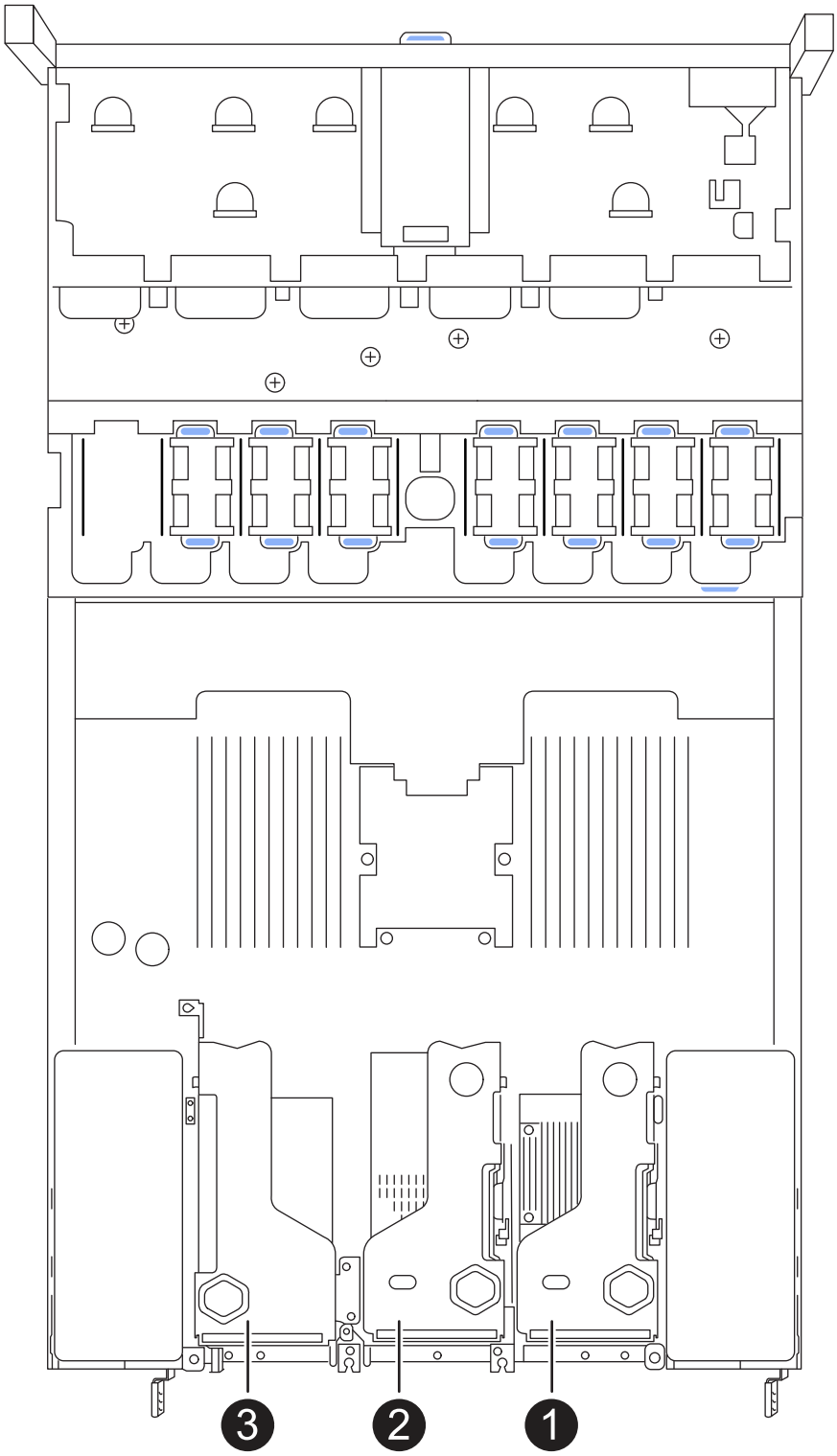

	Device or Part name	Description
1	NIC 1 in the one-slot riser assembly	10/25-GbE Ethernet network ports for Grid and Client Networks
2	NIC 2 in the one-slot riser assembly	1/10-GbE Ethernet network ports for Admin Network

	Device or Part name	Description
3	NIC 3 in the one-slot riser assembly	10/25-GbE Ethernet network ports for Grid and Client Networks

Some appliances support higher speed network ports and might have higher speed NICs installed.

Step 1: Remove the NIC

NIC 1/NIC 2

Steps

1. Wrap the strap end of the ESD wristband around your wrist, and secure the clip end to a metal ground to prevent static discharge.
2. Locate the riser assembly that contains the NIC at the rear of the appliance.
3. Rotate the blue locking latch on the riser with the failed NIC up and open.

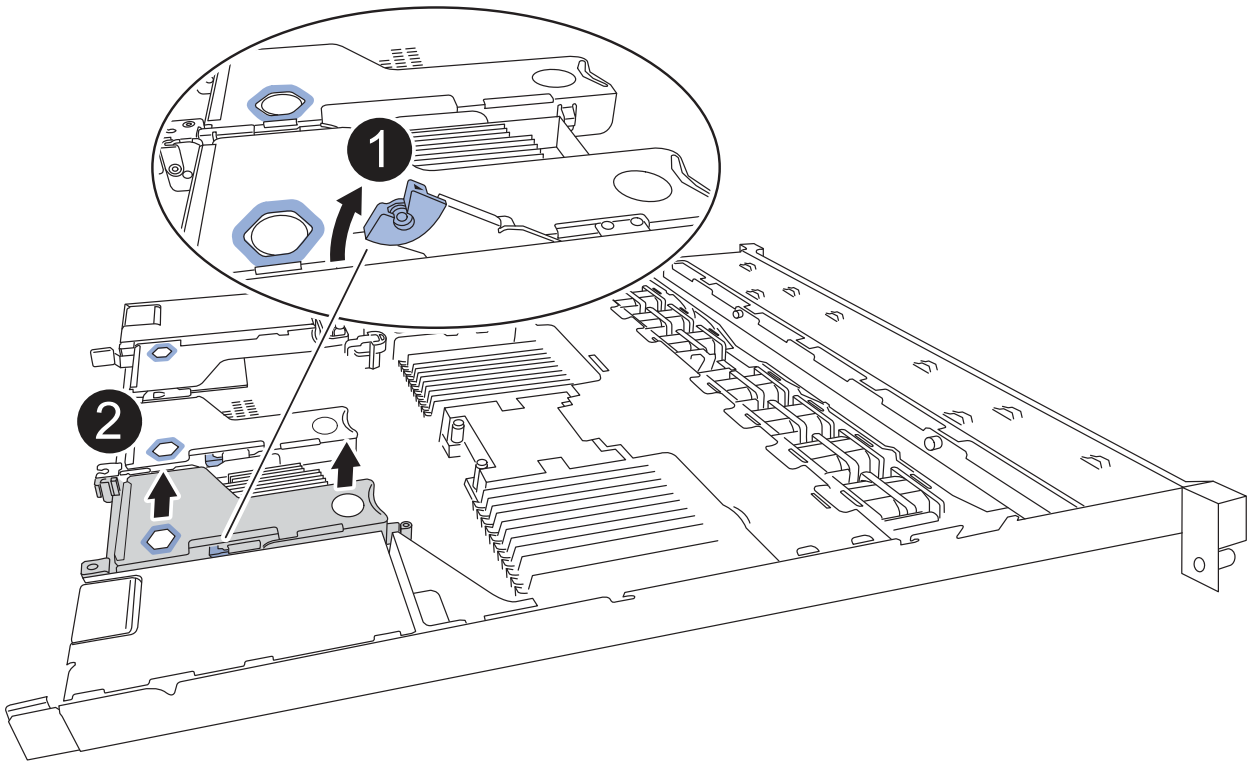

4. Carefully lift the riser assembly with the failed NIC upwards using the blue-marked holes. Move the riser assembly toward the front of the chassis as you lift it to allow the external connectors in its installed NIC to clear the chassis.
5. Place the riser on a flat anti-static surface with the metal frame side down to access the NIC.
6. Open the blue latch on the failed NIC and carefully remove it from the riser assembly. Rock the NIC slightly to help remove the NIC from its connector. Don’t use excessive force.

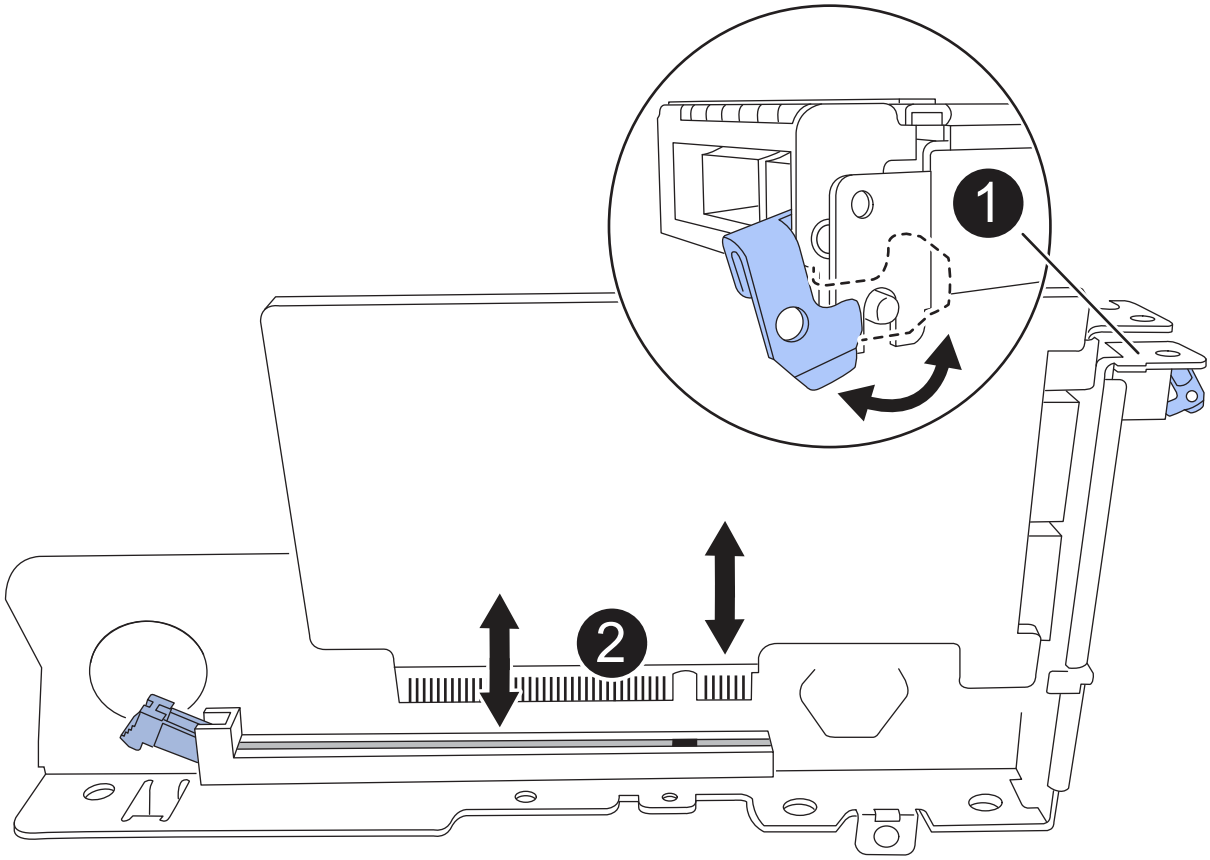

7. Place the riser and NIC on a flat anti-static surface.

NIC 3

Steps

1. Wrap the strap end of the ESD wristband around your wrist, and secure the clip end to a metal ground to prevent static discharge.
2. Rotate the blue lock on the riser with the failed NIC to the open position.

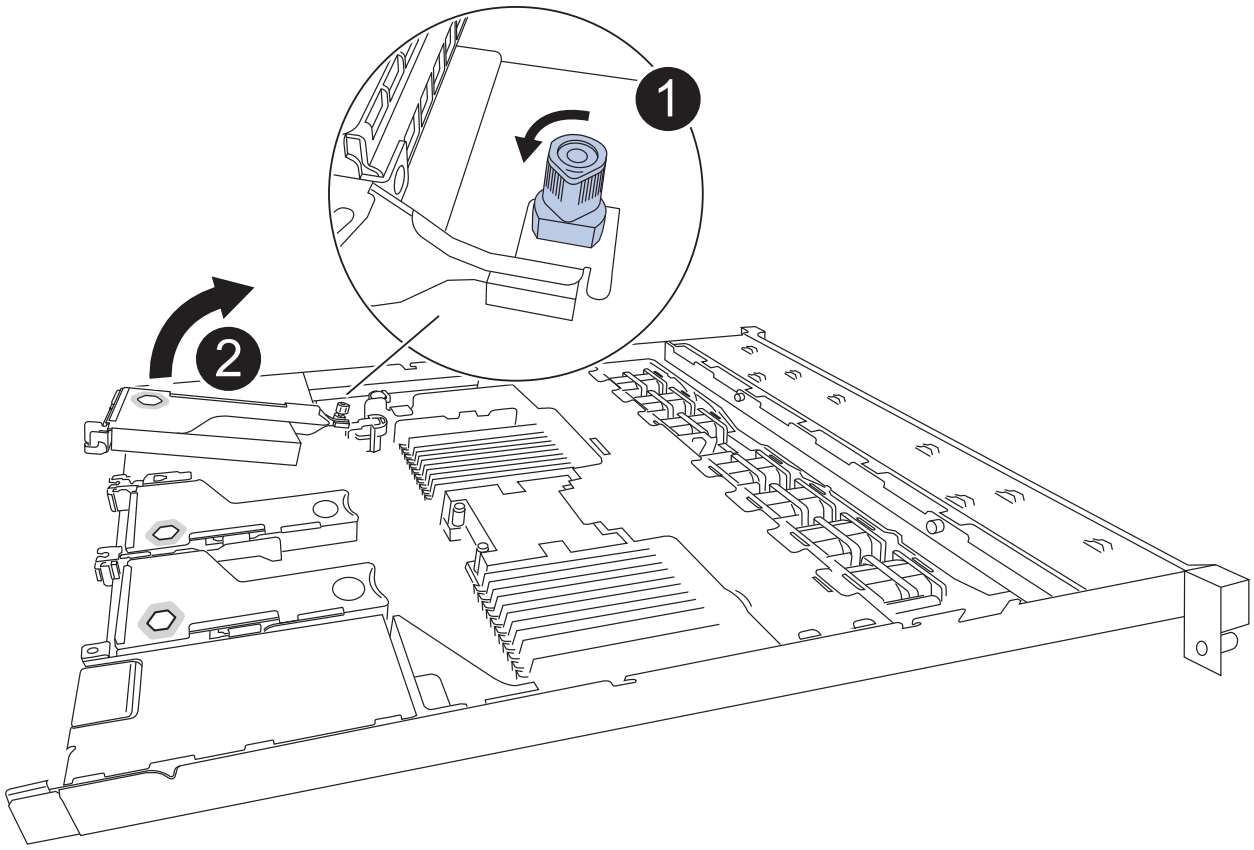

3. Carefully lift the riser assembly upwards using the blue-marked hole and riser edge. Move the riser assembly toward the front of the chassis as you lift it to allow the external connectors in its installed NIC to clear the chassis.
4. Place the riser on a flat anti-static surface with the metal frame side down to access the NIC.
5. Open the blue latch on the failed NIC and carefully remove it from the riser assembly. Rock the NIC slightly to help remove the NIC from its connector. Don’t use excessive force.

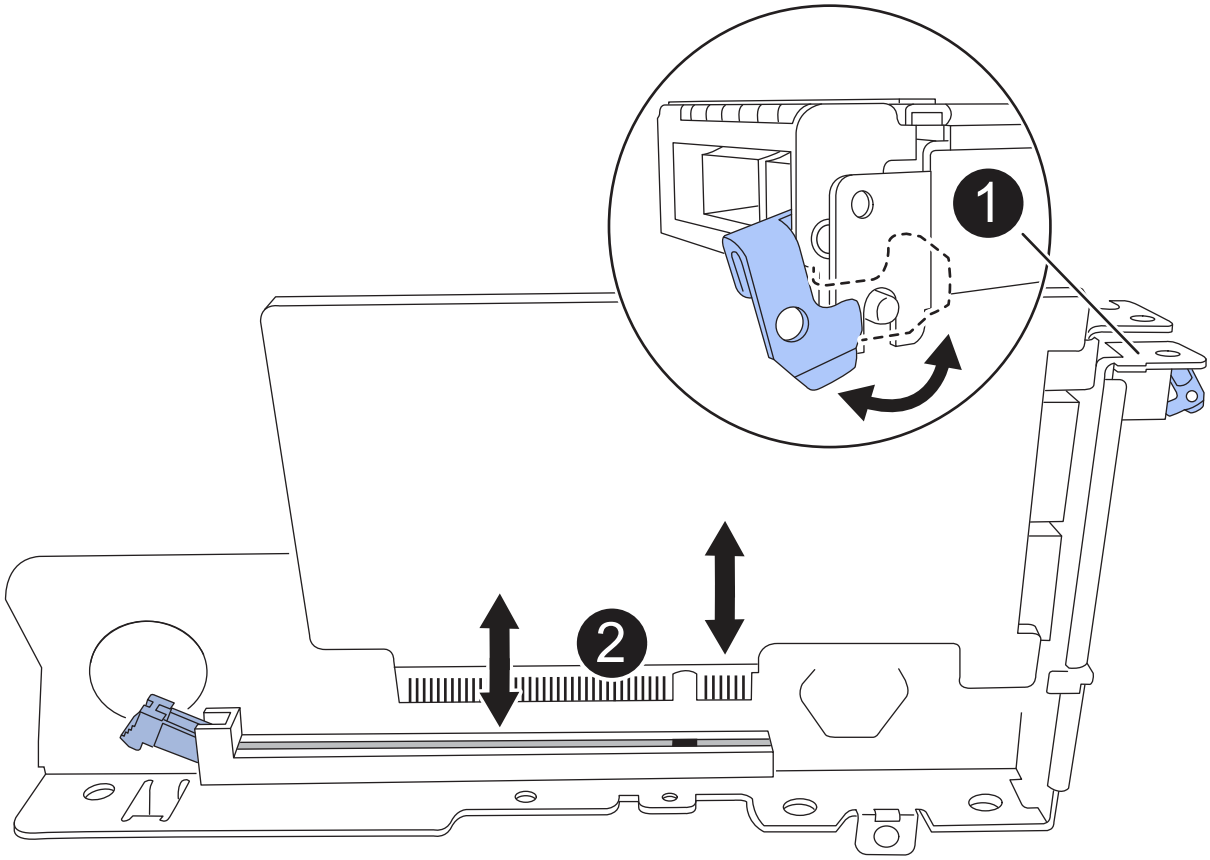

6. Place the riser and NIC on a flat anti-static surface.

Step 2: Reinstall the internal NIC

Install the replacement NIC into the same location as the one that was removed.

NIC 1/NIC 2

Steps

1. Wrap the strap end of the ESD wristband around your wrist, and secure the clip end to a metal ground to prevent static discharge.
2. Remove the replacement NIC from its packaging.
3. Install the replacement NIC into the riser assembly.
   a. Ensure the blue latch is in the open position.

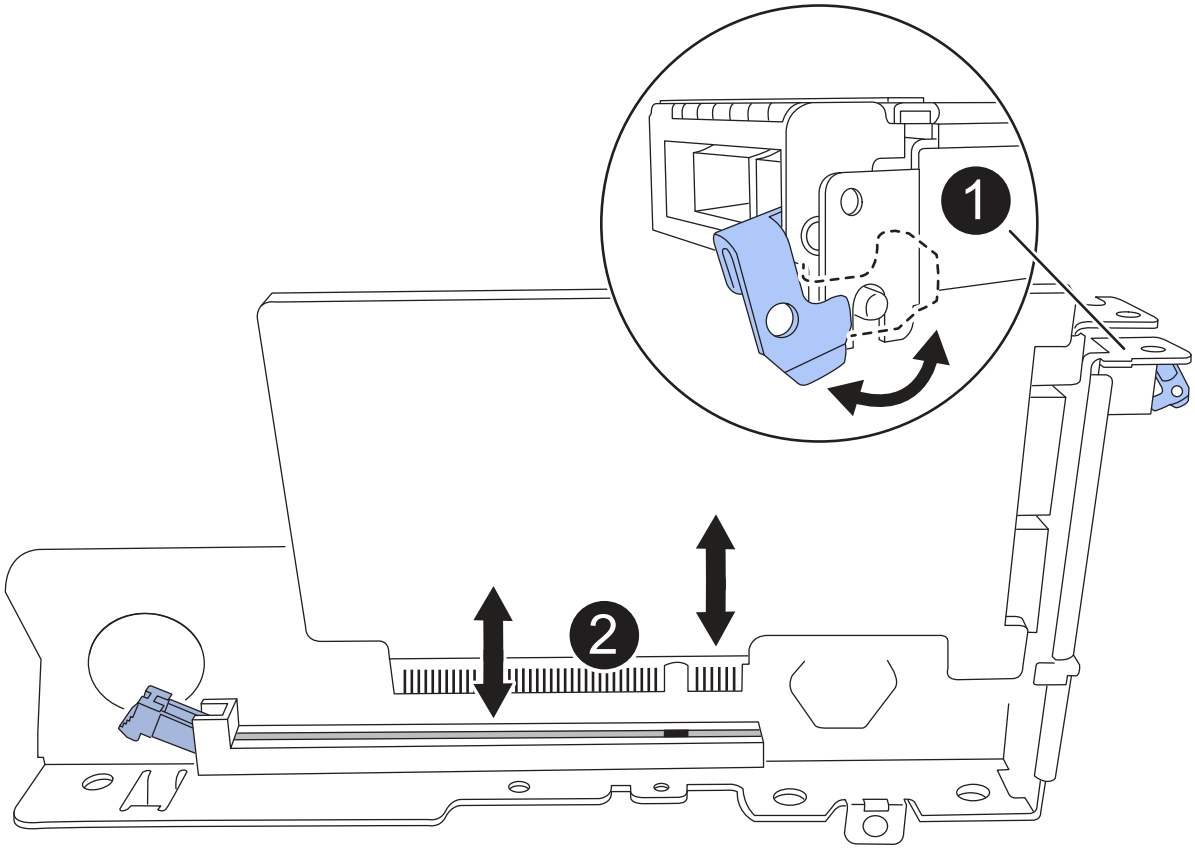

b. Align the NIC with its connector on the riser assembly. Carefully press the NIC into the connector until it is fully seated, and then close the blue latch.

4. Reinstall the riser assembly into chassis.

   a. Locate the alignment hole on the riser assembly that aligns with a guide pin on the system board to ensure correct riser assembly positioning.

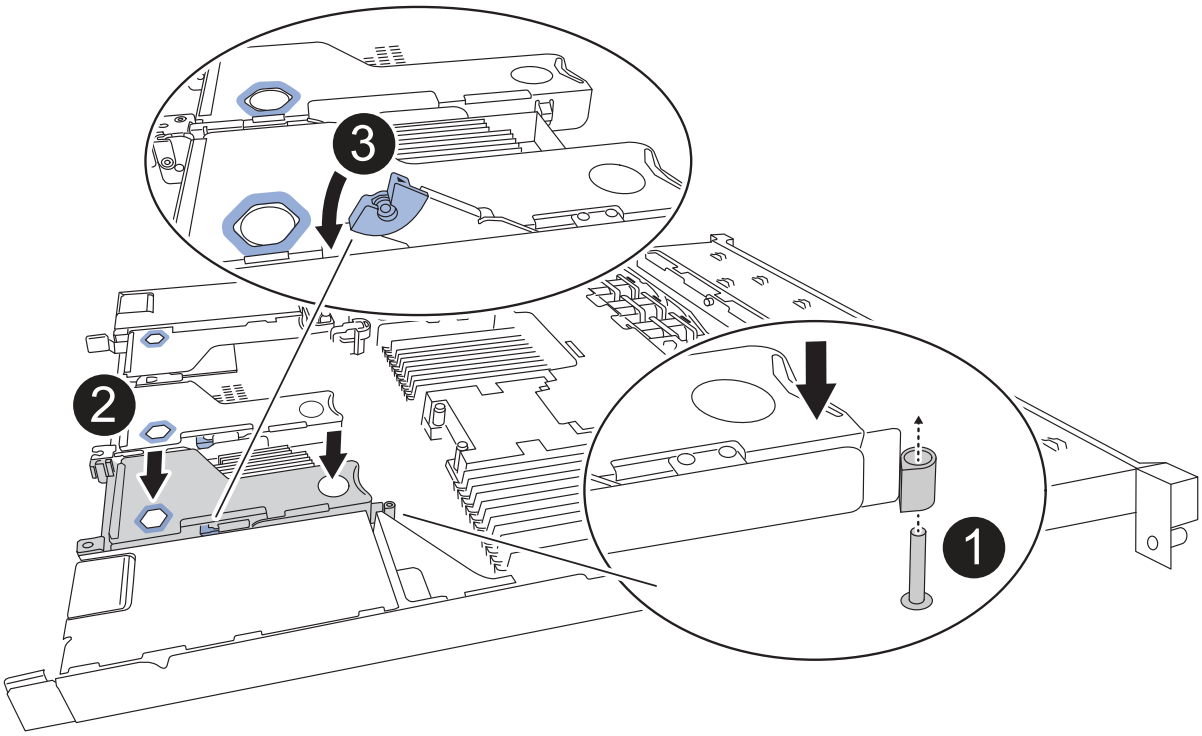

b. Position the riser assembly in the chassis, making sure that it aligns with the connector on the system board and guide pin.

c. Carefully press the riser assembly in place along its center line, next to the blue-marked holes, until it is fully seated.

5. If you have no other maintenance procedures to perform in the appliance, reinstall the appliance cover, return the appliance to the rack, attach cables, and apply power.

After replacing the part, return the failed part to NetApp, as described in the RMA instructions shipped with the kit. See the Parts Return & Replacements page for further information.

NIC 3

Steps

1. Wrap the strap end of the ESD wristband around your wrist, and secure the clip end to a metal ground to prevent static discharge.
2. Remove the replacement NIC from its packaging.
3. Install the replacement NIC into the riser assembly.

   a. Ensure the blue latch is in the open position.

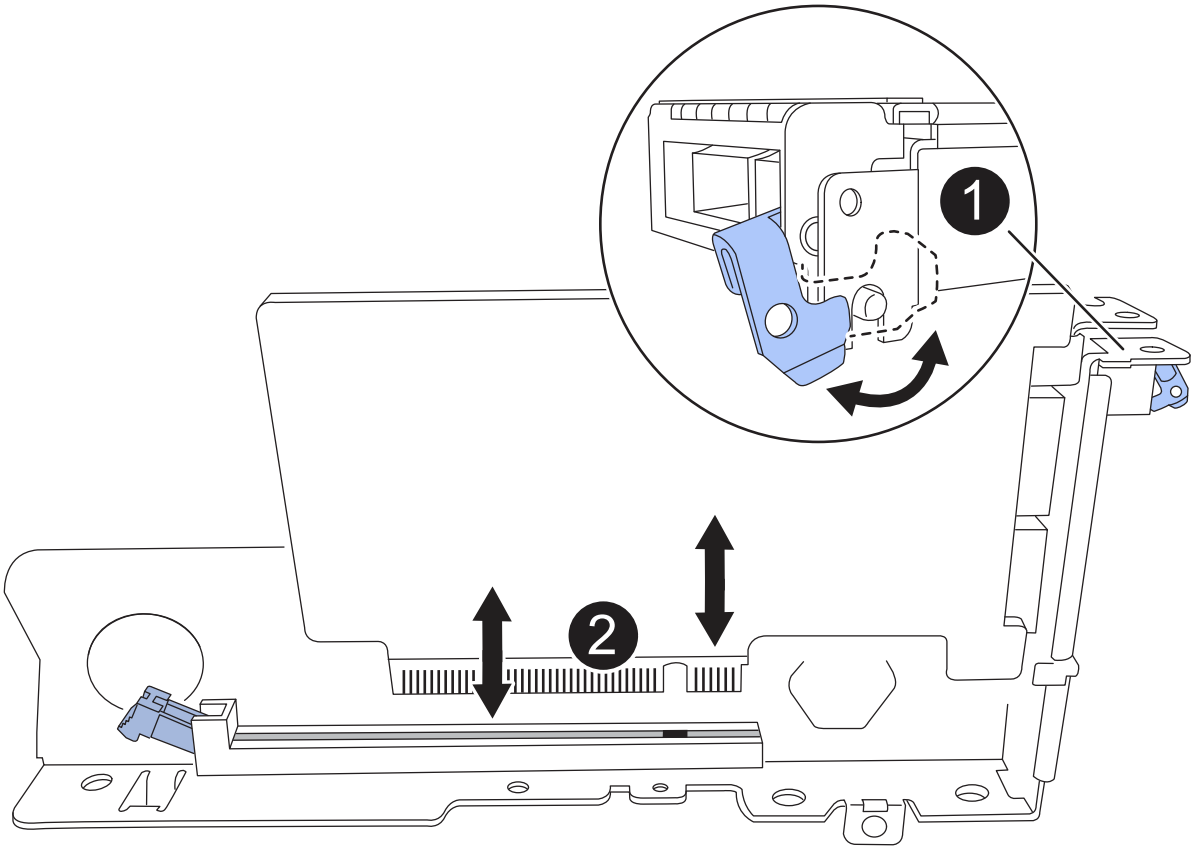

   b. Align the NIC with its connector on the riser assembly. Carefully press the NIC into the connector until it is fully seated, and then close the blue latch.

4. Reinstall the riser assembly into chassis.

   a. Position the riser assembly in the chassis, making sure that the edges of the riser assembly correctly align with the edges of the chassis.

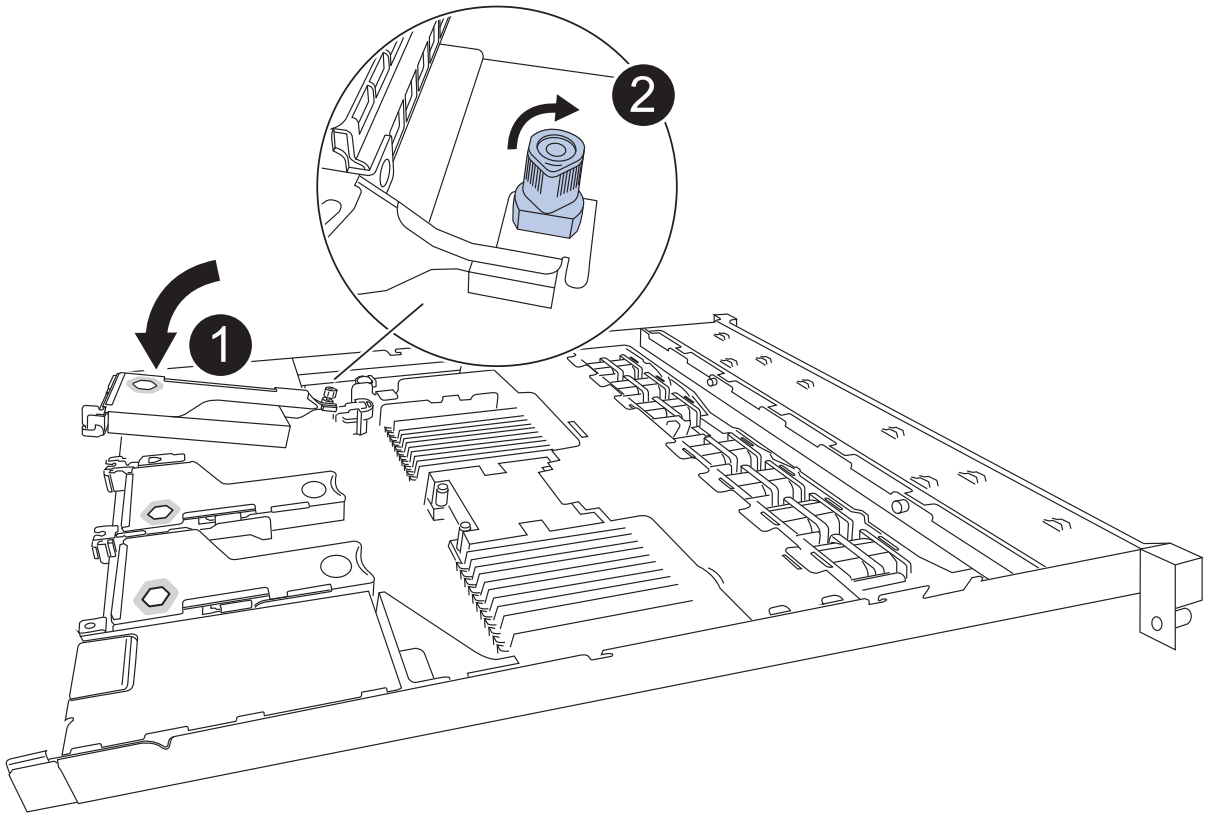

b. Carefully press the riser assembly in place along its center line, next to the blue-marked hole, until it is fully seated.

c. Rotate the blue lock on the riser to the closed position.

5. Remove the protective caps from the NIC ports where you will be reinstalling cables.
6. If you have no other maintenance procedures to perform in the appliance, reinstall the appliance cover, return the appliance to the rack, attach cables, and apply power.

After replacing the part, return the failed part to NetApp, as described in the RMA instructions shipped with the kit. See the Parts Return & Replacements page for further information.

Replace external NIC in the SG6200-CN

You might need to replace an external Network Interface Card (NIC) in the SG6200-CN if it is not functioning optimally or if it has failed.

About this task

To prevent service interruptions, confirm that all other Storage Nodes are connected to the grid before started the Network Interface Card (NIC) replacement or replace the NIC during a scheduled maintenance window when periods of service disruption are acceptable. See information about montioring node connection states.

> If you have ever used an ILM rule that creates only one copy of an object, you must replace the NIC during a scheduled maintenance window because you might temporarily lose access to those objects during this procedure. See information about why you should not use single-copy replication.

Before you begin

- You have the correct replacement NIC.
- You have determined the location of the NIC to replace.

- You have physically located the SG6200-CN controller where you are replacing the NIC in the data center.

> Hot-swapping is **not** supported for this procedure. A controlled shutdown of the appliance is required before disconnecting cables and removing the NIC.

- You have disconnected all cables, including the two power cords on the SG6200-CN.
- **Optional**: You have removed the controller from the rack if required by local regulations. Removal is not required as the the NIC is externally accessible.

Step 1: Remove the external NIC

Steps

1. Wrap the strap end of an ESD wristband around your wrist, and secure the clip end to a metal ground to prevent static discharge.
2. Use a screwdriver to loosen the screw on the faceplate of the NIC.

> Hot-swapping is **not** supported for this procedure. The controller must be disconnected from power before removing the NIC.

3. Carefully remove the NIC by pulling on the faceplate handle. Place the NIC on a flat, anti-static surface.

Step 2: Reinstall the external NIC

Steps

1. Wrap the strap end of an ESD wristband around your wrist, and secure the clip end to a metal ground to prevent static discharge.
2. Remove the replacement NIC from its packaging.
3. Align the NIC with the opening in the chassis and carefully push it in until fully seated.
4. Tighten the screw on the faceplate of the NIC.

After you finish

If you have no other maintenance procedures to perform in the appliance, return the appliance to the rack if it was removed, attach cables, and apply power.

After replacing the part, return the failed part to NetApp, as described in the RMA instructions shipped with the kit. See the Parts Return & Replacements page for further information.

Replace SGF6212 or SG6200-CN CMOS batteries

Use this procedure to replace the CMOS coin cell batteries on the system board.

About this task

To prevent service interruptions, confirm that all other Storage Nodes are connected to the grid before starting the CMOS battery replacement or replace the batteries during a scheduled maintenance window when periods of service disruption are acceptable. See the information about monitoring node connection states.

> If you have ever used an ILM rule that creates only one copy of an object, you must replace the batteries during a scheduled maintenance window because you might temporarily lose access to those objects during this procedure. See information about why you should not use single-copy replication.

Before you begin

- You have verified the appliance where the CMOS batteries needs to be replaced.
- You have physically located the SGF6212 appliance or SG6200-CN controller where the CMOS batteries need to be replaced in the data center.
- You have recorded the current BMC configuration of the appliance, if it remains available.
  1. Log in to the appliance to be replaced:
     a. Enter the following command: `ssh admin@grid_node_IP`
     b. Enter the password listed in the `Passwords.txt` file.
     c. Enter the following command to switch to root: `su -`
     d. Enter the password listed in the `Passwords.txt` file.

        When you are logged in as root, the prompt changes from `$` to `#`.
  2. Enter: **`run-host-command ipmitool lan print`** to display the current BMC configuration for the appliance.

     > A controlled shutdown of the appliance is required before removing the appliance from the rack.
- You have disconnected all cables and removed the appliance cover.

Steps

1. Wrap the strap end of the ESD wristband around your wrist, and secure the clip end to a metal ground to prevent static discharge.
2. Remove the first CMOS battery.
   a. Locate the CMOS battery on the system board.
   b. Use your finger or a plastic pry tool to press the retaining clip away from the battery to spring it from the socket.

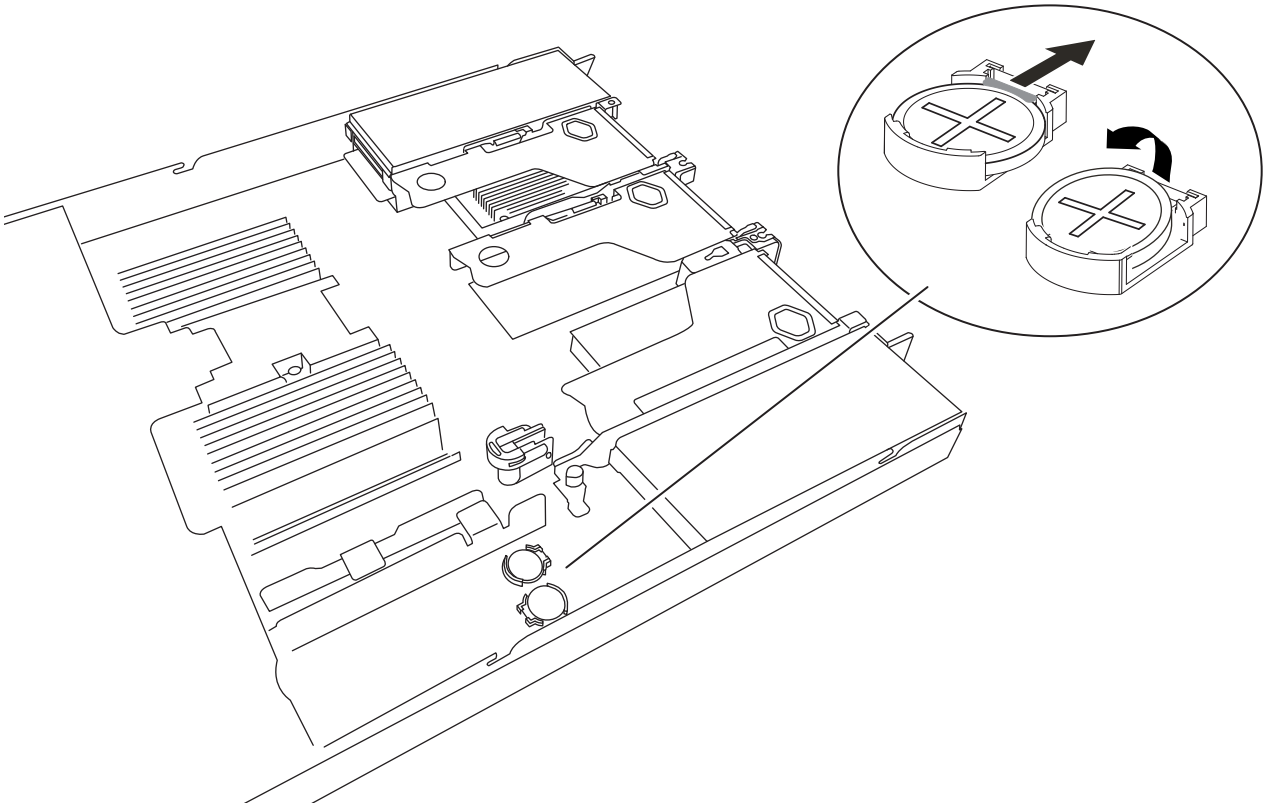

   c. Remove the battery and dispose of it properly.

3. Install the replacement CMOS battery.
   a. Remove the replacement CMOS battery from its packaging.
   b. Press the replacement battery into the empty socket on the system board with the positive (+) side up until the battery snaps in place.
4. Repeat these steps for the second CMOS battery.
5. If you have no other maintenance procedures to perform in the appliance, reinstall the appliance cover, return the appliance to the rack, attach cables, and apply power.
6. If the appliance you replaced had drive encryption enabled for the SED drives, you must enter the drive encryption passphrase to access the encrypted drives when the replacement appliance starts for the first time.
7. If the appliance you replaced used a key management server (KMS) to manage encryption keys for node encryption, additional configuration might be required before the node can join the grid. If the node does not automatically join the grid, make sure that these configuration settings have transferred to the new appliance and manually configure any settings that don't have the expected configuration:
   - Configure StorageGRID connections
   - Configure node encryption for the appliance
8. Log in to the appliance:
   a. Enter the following command: `ssh admin@grid_node_IP`
   b. Enter the password listed in the `Passwords.txt` file.
   c. Enter the following command to switch to root: `su -`
   d. Enter the password listed in the `Passwords.txt` file.

9. Restore BMC network connectivity for the appliance using one of the following options:
   - Use static IP, netmask, and gateway
   - Use DHCP to obtain an IP, netmask, and gateway
     a. To restore the BMC configuration to use a static IP, netmask, and gateway, enter the following commands:

        ```
        run-host-command ipmitool lan set 1 ipsrc static

        run-host-command ipmitool lan set 1 ipaddr Appliance_IP

        run-host-command ipmitool lan set 1 netmask Netmask_IP

        run-host-command ipmitool lan set 1 defgw ipaddr Default_gateway
        ```

     b. To restore the BMC configuration to use DHCP to obtain an IP, netmask, and gateway, enter the following command:

        ```
        run-host-command ipmitool lan set 1 ipsrc dhcp
        ```

10. After restoring BMC network connectivity, connect to the BMC interface to audit and restore any additional custom BMC configuration you might have applied. For example, you should confirm the settings for SNMP trap destinations and email notifications. See Configure BMC interface.
11. Confirm that the appliance node appears in the Grid Manager and that no alerts appear.

Replace DIMMs in storage controller shelf (SG6260)

You can replace a DIMM in the E4000 if a memory mismatch is present, or if you have a failed DIMM.

About this task

To replace a DIMM, you must verify the cache size of your controller, place the controller offline, remove the controller, remove the DIMMs, and install the new DIMMs in your controller. Then you can bring your controller back online and verify the storage array is working properly.

Before you begin

- Make sure you have the following:
  - A replacement DIMM.
  - An ESD wristband, or you have taken other antistatic precautions.
  - A flat, static free work area.
  - Labels to identify each cable that is connected to the controller canister.
  - Access to SANtricity System Manager:
    - From Grid Manager, select **Nodes** > ***appliance node*** > **SANtricity System Manager**. Controller information is on the SANtricity System Manager tab.
    - Point a browser in your management station to the controller's domain name or IP address.

Step 1: Determine if you need to replace a DIMM

Verify the cache size of your controller before replacing the DIMMS.

Steps

1. Access the Storage Array profile for the controller. From SANtricity System Manager, go to **Support › Support Center**. From the Support Resources page, select **Storage Array Profile**.
2. Scroll down or use the Search field to locate the **Data Cache Module** information.
3. If one of the following is present, note the DIMM's location and continue with remaining procedures in this section to replace the DIMMs on your controller:
   a. A failed DIMM, or a DIMM reporting **Data Cache Module** as not optimal.
   b. A DIMM with a mismatched **Data Cache Module** capacity.

Step 2: Place controller offline

Place the controller offline so you can safely remove and replace the DIMMs.

Steps

1. From SANtricity System Manager, review the details in the Recovery Guru to confirm that there is an issue with a mismatched memory and to ensure no other items must be addressed first.
2. From the Details area of the Recovery Guru, determine which DIMM to replace.
3. Back up the storage array's configuration database using SANtricity System Manager.

   If a problem occurs when you remove a controller, you can use the saved file to restore your configuration. The system will save the current state of the RAID configuration database, which includes all data for volume groups and disk pools on the controller.

   - From System Manager:
     a. Select **Support › Support Center › Diagnostics**.
     b. Select **Collect Configuration Data**.
     c. Click **Collect**.

     The file is saved in the Downloads folder for your browser with the name, **configurationData-<arrayName>-<dateTime>.7z**.

4. If the controller is not already offline, take it offline now using SANtricity System Manager.
   a. Select **Hardware**.
   b. If the graphic shows the drives, select **Show back of shelf** to show the controllers.
   c. Select the controller that you want to place offline.
   d. From the context menu, select **Place offline**, and confirm that you want to perform the operation.

   > If you are accessing SANtricity System Manager using the controller you are attempting to take offline, a SANtricity System Manager Unavailable message is displayed. Select **Connect to an alternate network connection** to automatically access SANtricity System Manager using the other controller.

5. Wait for SANtricity System Manager to update the controller's status to offline.

Do not begin any other operations until after the status has been updated.

6. Select **Recheck** from the Recovery Guru, and confirm that the OK to remove field in the Details area displays Yes, indicating that it is safe to remove this component.

Step 3: Remove controller canister

Remove the controller canister from the system and then remove the controller canister cover.

Steps

1. If you are not already grounded, properly ground yourself.
2. Loosen the hook and loop strap binding the cables to the cable management device, and then unplug the system cables and SFPs (if needed) from the controller canister, keeping track of where the cables were connected.

   Leave the cables in the cable management device so that when you reinstall the cable management device, the cables are organized.

3. Remove and set aside the cable management devices from the left and right sides of the controller canister.
4. Squeeze the latch on the cam handle until it releases, open the cam handle fully to release the controller canister from the midplane, and then, using two hands, pull the controller canister out of the chassis.
5. Turn the controller canister over and place it on a flat, stable surface.
6. Open the cover by pressing the blue buttons on the sides of the controller canister to release the cover, and then rotate the cover up and off of the controller canister.

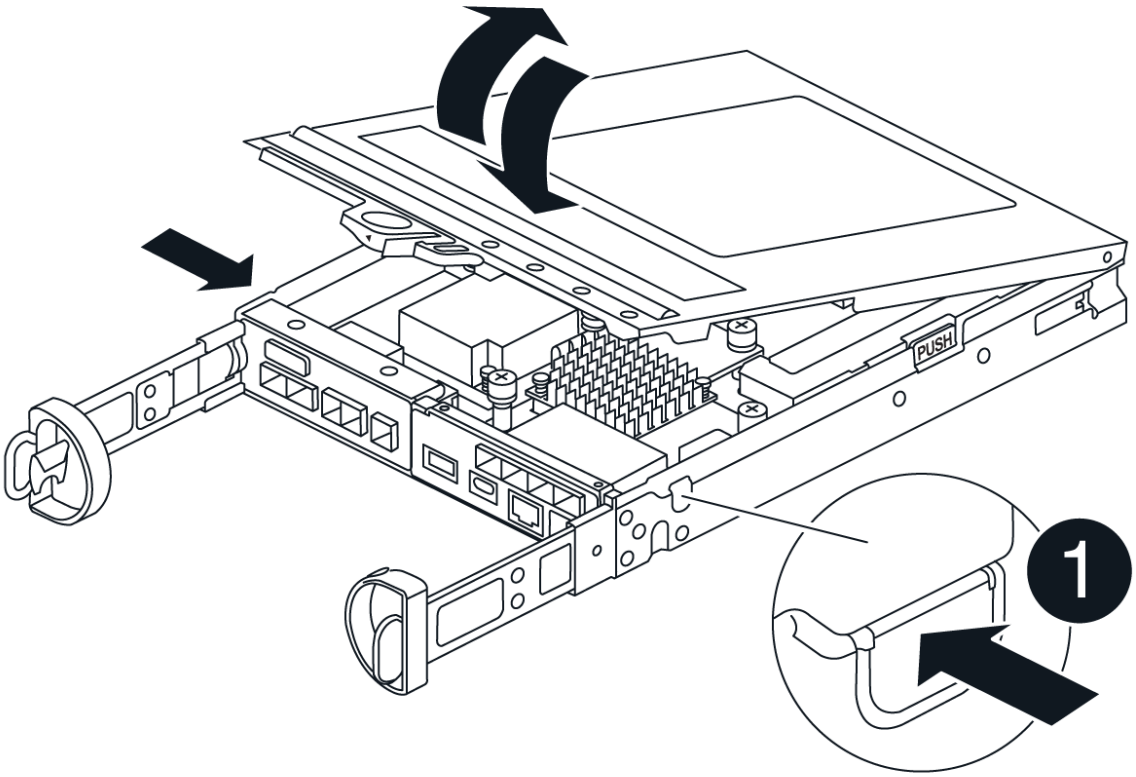

Step 4: Replace the DIMMs

Locate the DIMM inside the controller, remove it, and replace it.

Steps

1. If you are not already grounded, properly ground yourself.
2. You must perform a clean system shutdown before replacing system components to avoid losing unwritten data in the nonvolatile memory (NVMEM). The LED is located on the back of the controller canister.
3. If the NVMEM LED is not flashing, there is no content in the NVMEM; you can skip the following steps and proceed to the next task in this procedure.
4. If the NVMEM LED is flashing, there is data in the NVMEM and you must disconnect the battery to clear the memory:
   a. Remove the battery from the controller canister by pressing the blue button on the side of the controller canister.
   b. Slide the battery up until it clears the holding brackets, and then lift the battery out of the controller canister.
   c. Locate the battery cable, press the clip on the battery plug to release the lock clip from the plug socket, and then unplug the battery cable from the socket.
   d. Confirm that the NVMEM LED is no longer lit.
   e. Reconnect the battery connector and recheck the LED on the back of the controller.
   f. Unplug the battery cable.

5. Locate the DIMMs on your controller canister.
6. Note the orientation and location of the DIMM in the socket so that you can insert the replacement DIMM in the proper orientation.
7. Eject the DIMM from its slot by slowly pushing apart the two DIMM ejector tabs on either side of the DIMM, and then slide the DIMM out of the slot.

   The DIMM will rotate up a little.

8. Rotate the DIMM as far as it will go, and then slide the DIMM out of the socket.

   Carefully hold the DIMM by the edges to avoid pressure on the components on the DIMM circuit board.

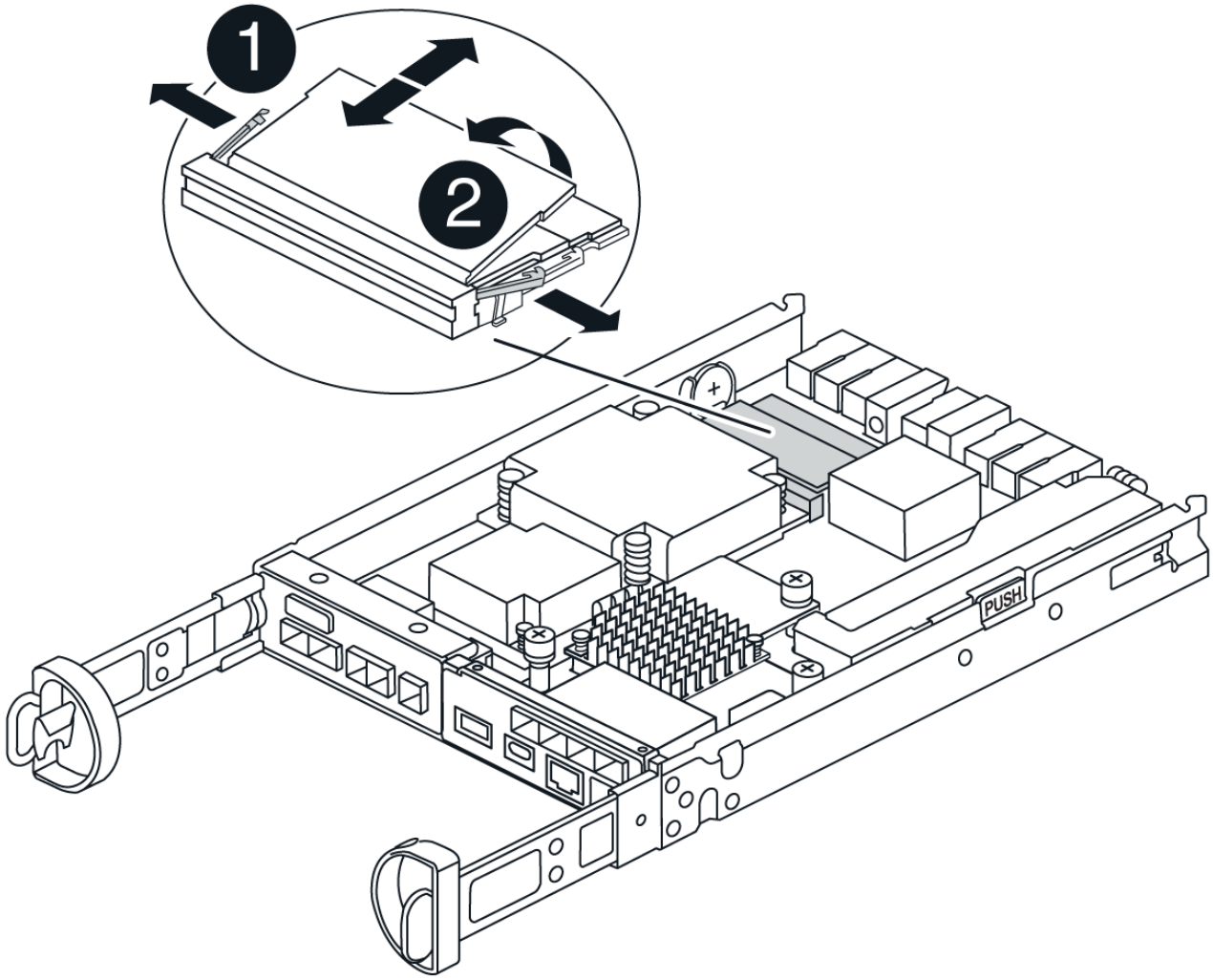

1	DIMM ejector tabs
2	DIMMS

9. Remove the replacement DIMM from the antistatic shipping bag, hold the DIMM by the corners, and align it to the slot.

   The notch among the pins on the DIMM should line up with the tab in the socket.

10. Insert the DIMM squarely into the slot.

    The DIMM fits tightly in the slot, but should go in easily. If not, realign the DIMM with the slot and reinsert it.

    > Visually inspect the DIMM to verify that it is evenly aligned and fully inserted into the slot.

11. Push carefully, but firmly, on the top edge of the DIMM until the ejector tabs snap into place over the notches at the ends of the DIMM.
12. Reconnect the battery:
    a. Plug in the battery.
    b. Make sure that the plug locks down into the battery power socket on the motherboard.
    c. Align the battery with the holding brackets on the sheet metal side wall.
    d. Slide the battery pack down until the battery latch engages and clicks into the opening on the side wall.
13. Reinstall the controller canister cover.

Step 5: Reinstall the controller canister

Reinstall the controller canister into the chassis.

Steps

1. If you are not already grounded, properly ground yourself.
2. If you have not already done so, replace the cover on the controller canister.
3. Turn the controller canister over and align the end with the opening in the chassis.
4. Gently push the controller canister halfway into the system. Align the end of the controller canister with the opening in the chassis, and then gently push the controller canister halfway into the system.

    > Do not completely insert the controller canister in the chassis until instructed to do so.

5. Recable the system, as needed.
6. Complete the reinstallation of the controller canister:
    a. With the cam handle in the open position, firmly push the controller canister in until it meets the midplane and is fully seated, and then close the cam handle to the locked position.

    > Do not use excessive force when sliding the controller canister into the chassis to avoid damaging the connectors.

    The controller begins to boot as soon as it is seated in the chassis.

    b. If you have not already done so, reinstall the cable management device.
    c. Bind the cables to the cable management device with the hook and loop strap.
7. Reboot the controller canister.

Step 6: Complete DIMMs replacement

Place the controller online, collect support data, and resume operations.

Steps

1. Place controller online.
   a. In System Manager, navigate to the Hardware page.
   b. Select **Controllers & Components**.
   c. Select the controller with the replaced DIMMs.
   d. Select **Place online** from the drop-down list.
2. As the controller boots, check the controller LEDs.

   When communication with the other controller is reestablished:

   - The amber Attention LED remains on.
   - The Host Link LEDs might be on, blinking, or off, depending on the host interface.
3. When the controller is back online, confirm that its status is Optimal and check the controller shelf's Attention LEDs.

   If the status is not Optimal or if any of the Attention LEDs are on, confirm that all cables are correctly seated and the controller canister is installed correctly. If necessary, remove and reinstall the controller canister.
   NOTE: If you cannot resolve the problem, contact technical support.

4. Click **Hardware › Support › Upgrade Center** to ensure that the latest version of SANtricity OS is installed.

   As needed, install the latest version.

5. Verify that all volumes have been returned to the preferred owner.
   a. Select **Storage › Volumes**. From the **All Volumes** page, verify that volumes are distributed to their preferred owners. Select **More › Change ownership** to view volume owners.
   b. If volumes are all owned by preferred owner continue to Step 6.
   c. If none of the volumes are returned, you must manually return the volumes. Go to **More › Redistribute volumes**.
   d. If there is no Recovery Guru present or if following the Recovery Guru steps the volumes are still not returned to their preferred owners contact support.
6. Collect support data for your storage array using SANtricity System Manager.
   a. Select **Support › Support Center › Diagnostics**.
   b. Select **Collect Support Data**.
   c. Click **Collect**.

      The file is saved in the Downloads folder for your browser with the name, **support-data.7z**.

Replace battery in storage controller shelf (SG6260)

You must replace the affected battery in your E4000 controller if the Recovery Guru in SANtricity System Manager indicates a "Battery Failed" or "Battery Replacement Required" status. To protect your data, the battery must be replaced as soon as possible.

From SANtricity System Manager, review the details in the Recovery Guru to confirm that there is an issue with a battery and to ensure no other items must be addressed first.

Before you begin

If you plan to replace a failed battery, you must have:

- A replacement battery.
- An ESD wristband, or you have taken other antistatic precautions.
- Labels to identify each cable that is connected to the controller canister.
- Access to SANtricity System Manager:
  - From Grid Manager, select **Nodes** > ***appliance node*** > **SANtricity System Manager**. Controller information is on the SANtricity System Manager tab.
  - Point a browser in your management station to the controller's domain name or IP address.
- Verify that no volumes are in use or that you have a multipath driver installed on all hosts using these volumes.

Step 1: Prepare to replace battery

You must place the affected controller offline so you can safely remove the failed battery. The controller that you are not placing offline must be online (in the optimal state).

Steps

1. From SANtricity System Manager, review the details in the Recovery Guru to confirm that there is an issue with a battery and to ensure no other items must be addressed first.
2. From the Details area of the Recovery Guru, determine which battery to replace.
3. Back up the storage array's configuration database using SANtricity System Manager.

   If a problem occurs when you remove a controller, you can use the saved file to restore your configuration. The system will save the current state of the RAID configuration database, which includes all data for volume groups and disk pools on the controller.

   - From System Manager:
     a. Select **Support › Support Center › Diagnostics**.
     b. Select **Collect Configuration Data**.
     c. Click **Collect**.

     The file is saved in the Downloads folder for your browser with the name, **configurationData-<arrayName>-<dateTime>.7z**.
   - Alternatively, you can back up the configuration database by using the following CLI command:

     ```
     save storageArray dbmDatabase sourceLocation=onboard contentType=all
     file="filename";
     ```

4. Collect support data for your storage array using SANtricity System Manager.
5. If a problem occurs when you remove a controller, you can use the saved file to troubleshoot the issue. The system will save inventory, status, and performance data about your storage array in a single file.
   a. Select **Support › Support Center › Diagnostics**.
   b. Select **Collect Support Data**.
   c. Click **Collect**.

The file is saved in the Downloads folder for your browser with the name, support-data.7z.

6. If the controller is not already offline, take it offline now using SANtricity System Manager.
   - From SANtricity System Manager:
     a. Select **Hardware**.
     b. If the graphic shows the drives, select **Show back of shelf** to show the controllers.
     c. Select the controller that you want to place offline.
     d. From the context menu, select **Place offline**, and confirm that you want to perform the operation.

     > If you are accessing SANtricity System Manager using the controller you are attempting to take offline, a SANtricity System Manager Unavailable message is displayed. Select **Connect to an alternate network connection** to automatically access SANtricity System Manager using the other controller.

   - Alternatively, you can take the controllers offline by using the following CLI commands:

     For controller A: `set controller [a] availability=offline`

     For controller B: `set controller [b] availability=offline`

7. Wait for SANtricity System Manager to update the controller's status to offline.
8. Select **Recheck** from the Recovery Guru, and confirm that the **Okay to remove** field in the **Details** area displays **Yes**. This indicates that it is safe to proceed to removing the controller canister.

Step 2: Remove E4000 controller canister

You need to remove the controller canister from the controller shelf, so you can remove the battery.

Before you begin

Make sure you have the following:

- An ESD wristband, or you have taken other antistatic precautions.
- Labels to identify each cable that is connected to the controller canister.

Steps

1. Disconnect all the cables from the controller canister.

   > To prevent degraded performance, do not twist, fold, pinch, or step on the cables.

2. If the host ports on the controller canister use SFP+ transceivers, leave them installed.
3. Confirm that the Cache Active LED on the back of the controller is off.
4. Squeeze the latch on the cam handle until it releases, open the cam handle fully to release the controller canister from the midplane, and then, using two hands, pull the controller canister half-way out of the chassis.

Step 3: Install the new battery

You must remove the failed battery and replace it.

Steps

1. Unpack the new battery and place it on a flat, static-free surface.

> To comply with IATA safely regulations, replacement batteries are shipped with a state of charge (SoC) of 30 percent or less. When you reapply power, keep in mind that write caching will not resume until the replacement battery is fully charged and it has completed its initial learn cycle.

2. If you are not already grounded, properly ground yourself.
3. Remove the controller canister from the chassis.
4. Turn the controller canister over and place it on a flat, stable surface.
5. Open the cover by pressing the blue buttons on the sides of the controller canister to release the cover, and then rotate the cover up and off of the controller canister.

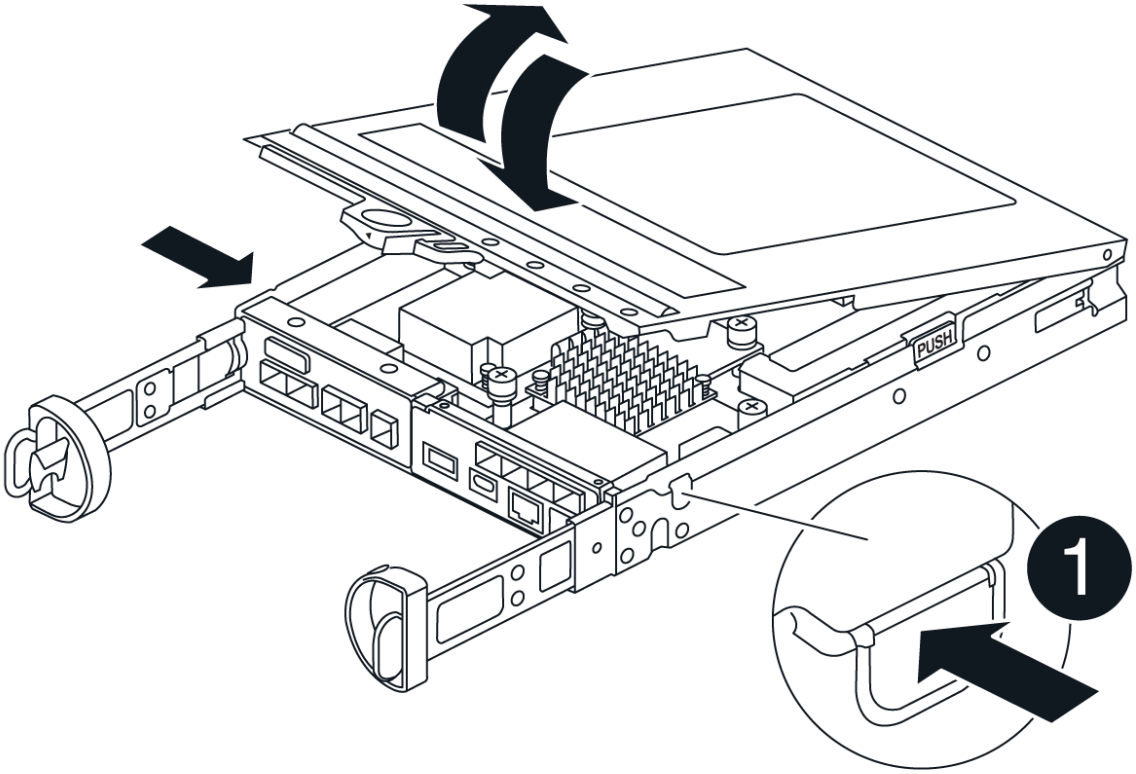

6. Locate the battery in the controller canister.
7. Remove the failed battery from the controller canister:
   a. Press the blue button on the side of the controller canister.
   b. Slide the battery up until it clears the holding brackets, and then lift the battery out of the controller canister.
   c. Unplug the battery from the controller canister.

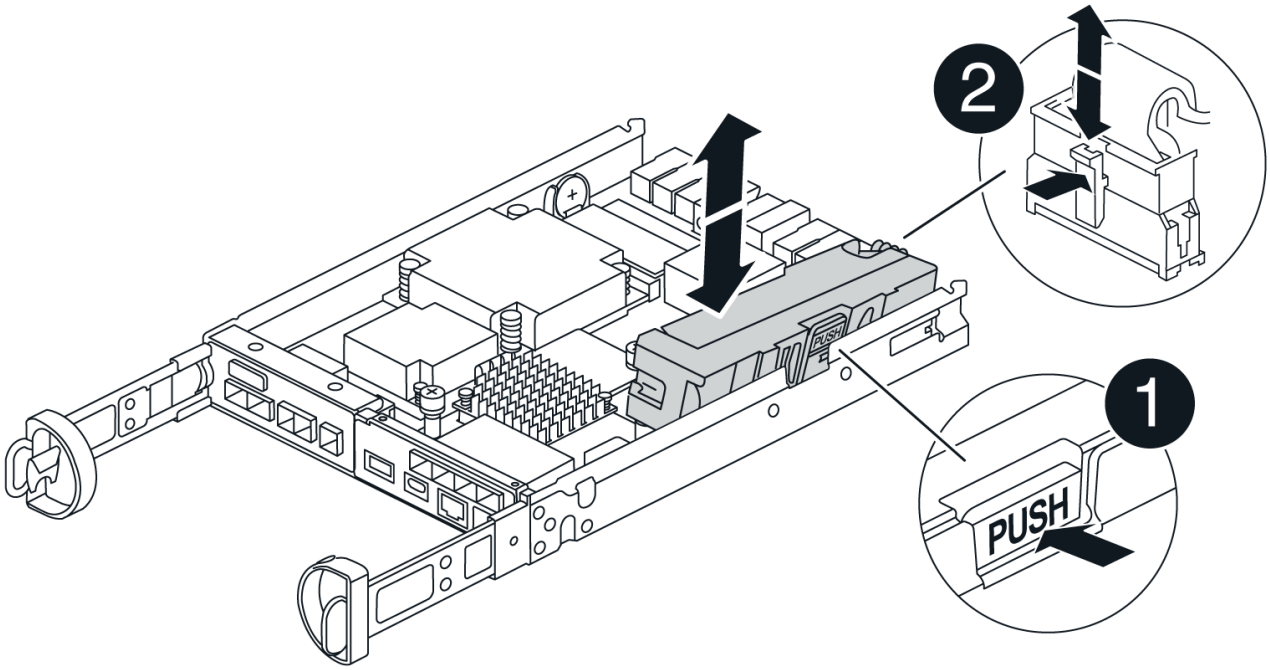

1	Battery release tab
2	Battery power connector

8. Remove the replacement battery from its package. Install the replacement battery:
   a. Plug the battery plug back into the socket on the controller canister.

      Make sure that the plug locks down into the battery socket on the motherboard.

   b. Align the battery with the holding brackets on the sheet metal side wall.
   c. Slide the battery pack down until the battery latch engages and clicks into the opening on the side wall.
9. Reinstall the controller canister cover and lock it into place.

Step 4: Reinstall the controller canister

After you replace components in the controller canister, reinstall it into the chassis.

Steps

1. If you are not already grounded, properly ground yourself.
2. If you have not already done so, replace the cover on the controller canister.
3. Turn the controller canister over and align the end with the opening in the chassis.
4. Align the end of the controller canister with the opening in the chassis, and then gently push the controller canister halfway into the system.

   Do not completely insert the controller canister in the chassis until instructed to do so.

5. Recable the system, as needed.
6. Complete the reinstallation of the controller canister:

a. With the cam handle in the open position, firmly push the controller canister in until it meets the midplane and is fully seated, and then close the cam handle to the locked position.

> Do not use excessive force when sliding the controller canister into the chassis to avoid damaging the connectors.

The controller begins to boot as soon as it is seated in the chassis.

b. If you have not already done so, reinstall the cable management device.

c. Bind the cables to the cable management device with the hook and loop strap.

Step 5: Complete battery replacement

Place the controller online.

Steps

1. Bring the controller online using SANtricity System Manager.
   - From SANtricity System Manager:
     a. Select **Hardware**.
     b. If the graphic shows the drives, select **Show back of shelf**.
     c. Select the controller you want to place online.
     d. Select **Place Online** from the context menu, and confirm that you want to perform the operation.

        The system places the controller online.
   - Alternatively, you can bring the controller back online by using the following CLI commands:

     For controller A: `set controller [a] availability=online;`

     For controller B: `set controller [b] availability=online;`

2. When the controller is back online, check the controller shelf's Attention LEDs.

   If the status is not Optimal or if any of the Attention LEDs are on, confirm that all cables are correctly seated, and check that the battery and the controller canister are installed correctly. If necessary, remove and reinstall the controller canister and the battery.

   > If you cannot resolve the problem, contact technical support.
   > If needed, collect support data for your storage array using SANtricity System Manager.

3. Verify that all volumes have been returned to the preferred owner.
   a. Select **Storage › Volumes**. From the **All Volumes** page, verify that volumes are distributed to their preferred owners. Select **More › Change ownership** to view volume owners.
   b. If volumes are all owned by preferred owner continue to step 4.
   c. If none of the volumes are returned, you must manually return the volumes. Go to **More › Redistribute volumes**.
   d. If only some of the volumes are returned to their preferred owners after auto-distribution or manual distribution, you must check the Recovery Guru for host connectivity issues.

e. If there is no Recovery Guru present or if after following the recovery guru steps the volumes are still not returned to their preferred owners, contact support.

4. Collect support data for your storage array using SANtricity System Manager.
   a. Select **Support › Support Center › Diagnostics**.
   b. Select Collect Support Data.
   c. Click Collect.

      The file is saved in the Downloads folder for your browser with the name, support-data.7z.

What's next?

Your battery replacement is complete. You can resume normal operations.

Replace SGF6212 or SG6200-CN cover

Remove the appliance cover to access internal components for maintenance, and replace the cover when you are finished.

Step 1: Remove cover

Steps

1. Wrap the strap end of an ESD wristband around your wrist and secure the clip end to a metal ground to prevent static discharge when working inside the appliance.
2. Remove the appliance from the cabinet or rack to access the top cover.

1. Unlock the cover latch by pressing the blue lock button on the appliance cover.

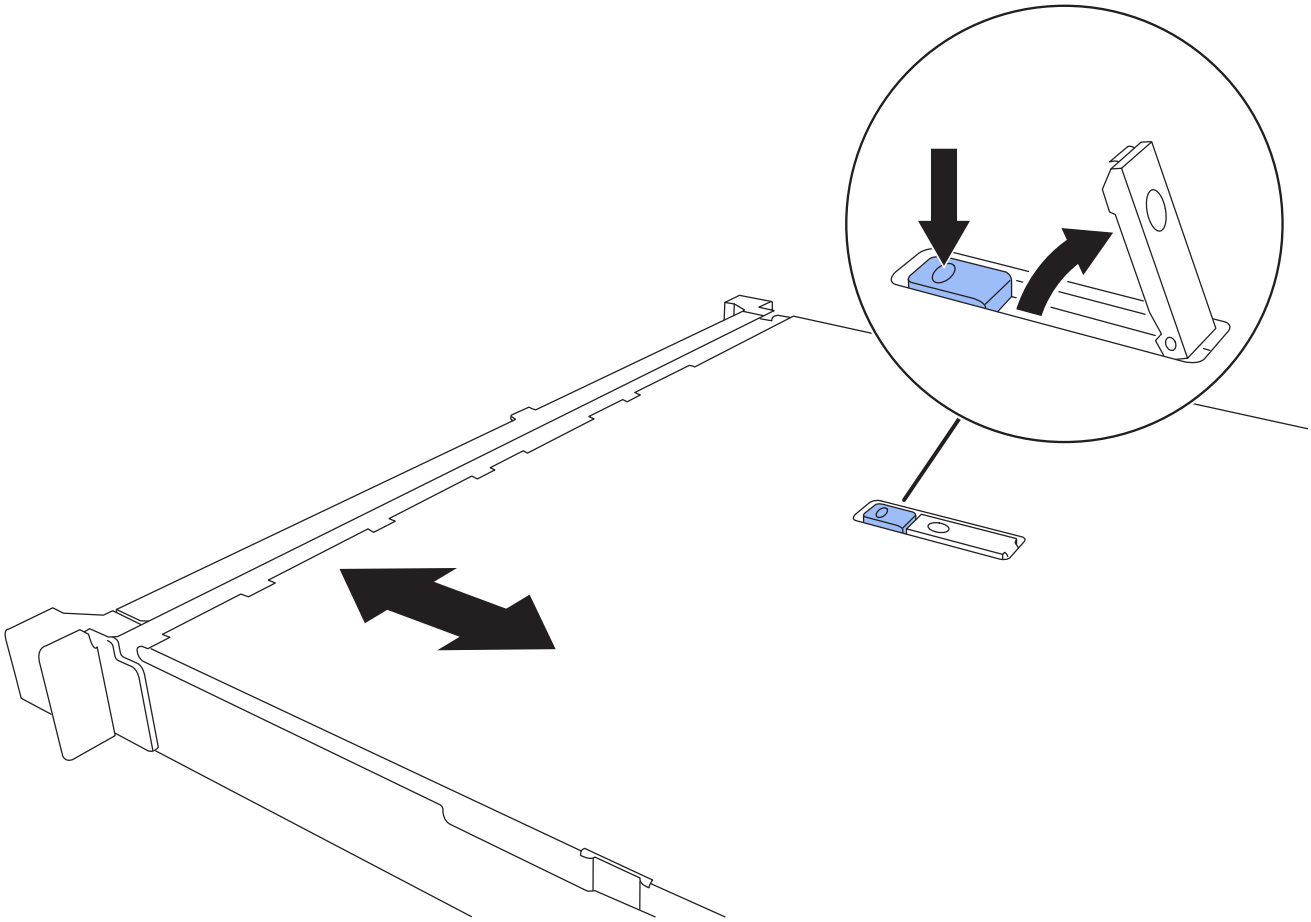

2. Rotate the latch up and back toward the rear of the appliance chassis until it stops; then, carefully lift the cover from the chassis and set it aside.

Step 2: Reinstall cover

Steps

1. With the cover latch open, align the cover above the chassis and carefully lower it.
2. Rotate the cover latch forward and down until it stops and the cover fully seats into the chassis. Verify that there are no gaps along the front edge of the cover.

   If the cover is not fully seated, you might not be able to slide the appliance into the rack.

3. Reinstall the appliance in the cabinet or rack.

Add expansion shelf to deployed SG6260

To increase storage capacity, you can add one or two expansion shelves to an SG6260 that is already deployed in a StorageGRID system.

About this task

To add an expansion shelf, you perform these high-level steps:

- Install the hardware in the cabinet or rack.
- Place the SG6260 into maintenance mode.

- Connect the expansion shelf to the E4000 controller shelf or to another expansion shelf.
- Start the expansion using the StorageGRID Appliance Installer.
- Wait until the new volumes are configured.

Completing the procedure for one or two expansion shelves should take one hour or less per appliance node. To minimize downtime, the following steps instruct you to install the new expansion shelves and drives before placing the SG6260 into maintenance mode. The remaining steps should take approximately 20 to 30 minutes per appliance node.

Before you begin

- You must have the provisioning passphrase.
- You must be running StorageGRID 12.0 or later.
- You have the expansion shelf and two SAS cables for each expansion shelf.
- You have physically located the controller where you are adding the expansion shelf in the data center.

Steps

1. Follow the instructions for installing 60-drive shelves into a cabinet or rack.
2. From the Grid Manager, place the SG6200-CN controller into maintenance mode.
3. Connect each expansion shelf to the E4000 controller shelf as shown in the diagram.

   This drawing shows two expansion shelves. If you have only one, connect IOM A to controller A and connect IOM B to controller B.

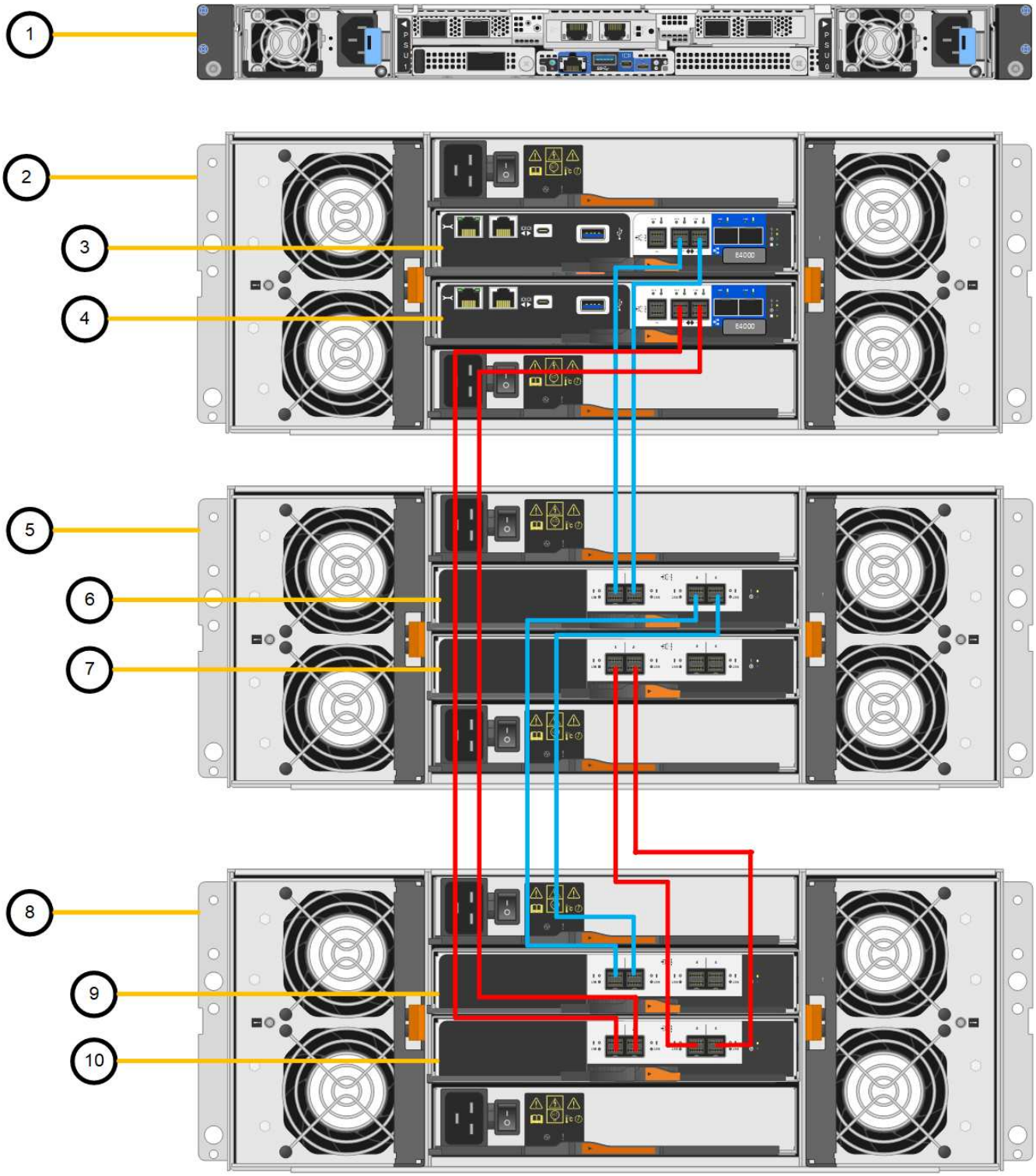

Callout	Description
1	SG6200-CN
2	E4000 controller shelf
3	Controller A
4	Controller B
5	Expansion shelf 1

Callout	Description
6	IOM A for expansion shelf 1
7	IOM B for expansion shelf 1
8	Expansion shelf 2
9	IOM A for expansion shelf 2
10	IOM B for expansion shelf 2

4. Connect the power cords and apply power to the expansion shelves.
   a. Connect a power cord to each of the two power supply units in each expansion shelf.
   b. Connect the two power cords in each expansion shelf to two different PDUs in the cabinet or rack.
   c. Turn on the two power switches for each expansion shelf.
      - Don't turn off the power switches during the power-on process.
      - The fans in the expansion shelves might be very loud when they first start up. The loud noise during start-up is normal.
5. Monitor the Home page of the StorageGRID Appliance Installer.

   In approximately five minutes, the expansion shelves finish powering up and are detected by the system. The Home page shows the number of new expansion shelves detected, and the Start Expansion button is enabled.

   Examples of the messages that could appear on the Home page, depending on the number of existing or new expansion shelves, as follows:

   - A banner that displays at the top of the page indicates the total number of expansion shelves detected.
     - The banner indicates the total number of expansion shelves, whether the shelves are configured and deployed or new and unconfigured.
     - If no expansion shelves are detected, the banner will not appear.
   - A message at the bottom of the page indicates that an expansion is ready to be started.
     - The message indicates the number of new expansion shelves StorageGRID detects. "Attached" indicates that the shelf is detected. "Unconfigured" indicates that the shelf is new and not yet configured using the StorageGRID Appliance Installer.

       Expansion shelves that are already deployed aren't included in this message. They are included in the count in the banner at the top of the page.

     - The message will not appear if new expansion shelves aren't detected.
6. As necessary, resolve any issues described in the messages on the Home page.

   For example, use SANtricity System Manager to resolve any storage hardware issues.

7. Verify that the number of expansion shelves displayed on the Home page matches the number of expansion shelves you are adding.

   If the new expansion shelves have not been detected, verify that they are properly cabled and powered up.

8. Click **Start Expansion** to configure the expansion shelves and make them available for object storage.
9. Monitor the progress of the expansion shelf configuration.

   Progress bars appear on the web page, just as they do during initial installation.

   When configuration is complete, the appliance automatically reboots to exit maintenance mode and rejoin the grid. This process can take up to 20 minutes.

   > To retry the expansion shelf configuration if it fails, go to the StorageGRID Appliance Installer, select **Advanced** > **Reboot Controller**, and then select **Reboot into Maintenance Mode**. After the node reboots, retry the expansion shelf configuration.

   When the reboot is complete, the **Tasks** tab displays with selections to reboot the node or place the appliance in maintenance mode.

10. Verify the status of the appliance Storage Node and the new expansion shelves.
    a. In the Grid Manager, select **Nodes** and verify that the appliance Storage Node has a green check mark icon.

       The green check mark icon means that no alerts are active and the node is connected to the grid. For a description of node icons, see Monitor node connection states.

    b. Select the **Storage** tab and confirm that 16 new object stores are shown in the Object Storage table for each expansion shelf you added.
    c. Verify that each new expansion shelf has a shelf status of Nominal and a configuration status of Configured.

Replace appliance

Replace SGF6212 appliance

You might need to replace the appliance if it is not functioning optimally or if it has failed.

About this task

The StorageGRID node will not be accessible while you replace the appliance. If the appliance is functioning sufficiently, you can perform a controlled shutdown at the start of this procedure.

> If you are replacing the appliance before installing StorageGRID software, you might not be able to access the StorageGRID Appliance Installer immediately after completing this procedure. While you can access the StorageGRID Appliance Installer from other hosts on the same subnet as the appliance, you can't access it from hosts on other subnets. This condition should resolve itself within 15 minutes (when any ARP cache entries for the original appliance time out), or you can clear the condition immediately by purging any old ARP cache entries manually from the local router or gateway.

Before you begin

- You have a replacement appliance with the same part number as the appliance you are replacing. Check the tags attached to the front of the appliances to confirm that the part numbers match.
- You have labels to identify each cable that is connected to the appliance.
- You have physically located the appliance.

Steps

1. Display the current configurations of the appliance and record them.
   a. Log in to the appliance to be replaced:
      i. Enter the following command: `ssh admin@grid_node_IP`
      ii. Enter the password listed in the `Passwords.txt` file.
      iii. Enter the following command to switch to root: `su -`
      iv. Enter the password listed in the `Passwords.txt` file.

      When you are logged in as root, the prompt changes from `$` to `#`.

   b. Enter: **`run-host-command ipmitool lan print`** to display the current BMC configurations for the appliance.
2. Shut down the appliance.
3. If any of the network interfaces on this StorageGRID appliance are configured for DHCP, you need to update the permanent DHCP lease assignments on the DHCP servers to reference the MAC addresses of the replacement appliance. This ensures that the appliance is assigned the expected IP addresses.

   Contact your network or DHCP-server administrator to update the permanent DHCP lease assignments. The administrator can determine the MAC addresses of the replacement appliance from the DHCP server logs or by inspecting the MAC address tables in the switches to which the appliance Ethernet ports are connected.

4. Remove and replace the appliance:
   a. Label the cables and then disconnect the cables and any network transceivers.

      To prevent degraded performance, don't twist, fold, pinch, or step on the cables.

   b. Remove the failed appliance from the cabinet or rack.
   c. Note the position of the replaceable components (two power supplies, three NICs, and twelve SSDs) in the failed appliance.

      The twelve drives are in the following positions in the chassis (front of chassis with bezel removed shown):

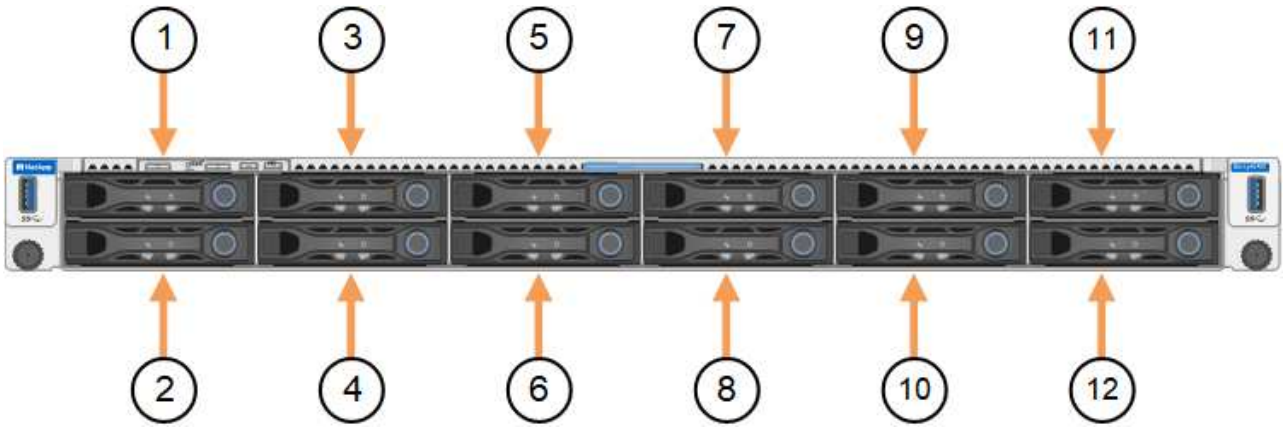

	Drive
1	HDD00
2	HDD01
3	HDD02
4	HDD03
5	HDD04
6	HDD05
7	HDD06
8	HDD07
9	HDD08
10	HDD09
11	HDD10
12	HDD11

d. Transfer the replaceable components to the replacement appliance.

   Follow the maintenance instructions provided for reinstalling the replaceable components.

   > If you wish to retain the data on the drives, be sure to insert the SSD drives into the same drive slots they occupied in the failed appliance. If you don't, the Appliance Installer will display a warning message and you will have to put the drives into the correct slots and reboot the appliance before the appliance can rejoin the grid.

e. Install the replacement appliance into the cabinet or rack.

f. Replace the cables and any optical transceivers.

5. Power on the appliance.
6. If the appliance you replaced had hardware drive encryption enabled for the SED drives, see Access an encrypted drive. Follow the guidance to access the encrypted drive when the replacement appliance starts for the first time. A reboot will be required to complete the procedure.
7. Wait for the appliance to rejoin the grid. If the appliance does not rejoin the grid, follow the guidance on the StorageGRID Appliance Installer home page to address any issues.

   > To prevent data loss if the Appliance Installer indicates that physical hardware changes are required, such as moving disk drives to different slots, power down the appliance before making hardware changes.

8. If the appliance you replaced used a key management server (KMS) to manage encryption keys for node encryption, additional configuration might be required before the node can join the grid. If the node does not automatically join the grid, make sure that these configuration settings have transferred to the new appliance and manually configure any settings that don't have the expected configuration:
   - Configure StorageGRID connections
   - Configure node encryption for the appliance
9. Log in to the replaced appliance:

a. Enter the following command: `ssh admin@grid_node_IP`

b. Enter the password listed in the `Passwords.txt` file.

c. Enter the following command to switch to root: `su -`

d. Enter the password listed in the `Passwords.txt` file.

10. Restore BMC network connectivity for the replaced appliance. There are two options:
    - Use static IP, netmask, and gateway
    - Use DHCP to obtain an IP, netmask, and gateway

    a. To restore the BMC configuration to use a static IP, netmask, and gateway, enter the following commands:

    ```
    run-host-command ipmitool lan set 1 ipsrc static

    run-host-command ipmitool lan set 1 ipaddr Appliance_IP

    run-host-command ipmitool lan set 1 netmask Netmask_IP

    run-host-command ipmitool lan set 1 defgw ipaddr Default_gateway
    ```

    b. To restore the BMC configuration to use DHCP to obtain an IP, netmask, and gateway, enter the following command:

    ```
    run-host-command ipmitool lan set 1 ipsrc dhcp
    ```

11. After restoring BMC network connectivity, connect to the BMC interface to audit and restore any additional custom BMC configuration you might have applied. For example, you should confirm the settings for SNMP trap destinations and email notifications. See Configure BMC interface.
12. Confirm that the appliance node appears in the Grid Manager and that no alerts appear.

After replacing the part, return the failed part to NetApp, as described in the RMA instructions shipped with the kit. See the Parts Return & Replacements page for further information.

Related information

- View status indicators
- View boot-up codes for appliance

Replace SG6200-CN controller

You might need to replace the SG6200-CN controller if it is not functioning optimally or if it has failed.

About this task

The appliance Storage Node will not be accessible when you replace the SG6200-CN controller. If the SG6200-CN controller is functioning sufficiently, you can perform a controlled shutdown at the start of this procedure.

> If you are replacing the controller before installing StorageGRID software, you might not be able to access the StorageGRID Appliance Installer immediately after completing this procedure. While you can access the StorageGRID Appliance Installer from other hosts on the same subnet

> as the appliance, you can't access it from hosts on other subnets. This condition should resolve itself within 15 minutes (when any ARP cache entries for the original controller time out), or you can clear the condition immediately by purging any old ARP cache entries manually from the local router or gateway.

Before you begin

- You have a replacement controller with the same part number as the controller you are replacing. Check the tags attached to the front of the controllers to confirm that the part numbers match.
- You have labels to identify each cable that is connected to the controller.
- You have physically located the controller to replace in the data center.

  Locate controller in data center

Steps

1. Display the current configurations of the appliance and record them.
   a. Log in to the appliance to be replaced:
      i. Enter the following command: `ssh admin@grid_node_IP`
      ii. Enter the password listed in the `Passwords.txt` file.
      iii. Enter the following command to switch to root: `su -`
      iv. Enter the password listed in the `Passwords.txt` file.

      When you are logged in as root, the prompt changes from `$` to `#`.

   b. Enter: **`run-host-command ipmitool lan print`** to display the current BMC configurations for the appliance.
2. If the SG6200-CN controller is functioning sufficiently to allow for a controlled shutdown, shut down the SG6200-CN controller.
3. If any of the network interfaces on this StorageGRID appliance are configured for DHCP, you might need to update the permanent DHCP lease assignments on the DHCP servers to reference the MAC addresses of the replacement appliance. The update ensures the appliance is assigned the expected IP addresses.
4. Remove and replace the SG6200-CN controller:
   a. Label and then disconnect the cables.

   > To prevent degraded performance, don't twist, fold, pinch, or step on the cables.

   b. Remove the failed controller from the cabinet or rack.
   c. Install the replacement controller into the cabinet or rack.
   d. Replace the cables.
   e. Power on the controller and monitor the controller LEDs.
5. If the appliance you replaced had hardware drive encryption enabled for the SED drives, you must enter the drive encryption passphrase to access the encrypted drives when the replacement appliance starts for the first time.
6. If the appliance where you replaced the controller used a key management server (KMS) to encrypt data, additional configuration might be required before the node can join the grid. If the node does not automatically join the grid, make sure that these configuration settings have transferred to the new

controller and manually configure any settings that don't have the expected configuration:

- Configure network links
- Configure StorageGRID IP addresses
- Configure node encryption for the appliance

7. Log in to the appliance with the replaced controller:
   a. Enter the following command: `ssh admin@grid_node_IP`
   b. Enter the password listed in the `Passwords.txt` file.
   c. Enter the following command to switch to root: `su -`
   d. Enter the password listed in the `Passwords.txt` file.
8. Restore BMC network connectivity for the appliance. There are two options:
   - Use static IP, netmask, and gateway
   - Use DHCP to obtain an IP, netmask, and gateway
     a. To restore the BMC configuration to use a static IP, netmask, and gateway, enter the following commands:

```
run-host-command ipmitool lan set 1 ipsrc static

run-host-command ipmitool lan set 1 ipaddr Appliance_IP

run-host-command ipmitool lan set 1 netmask Netmask_IP

run-host-command ipmitool lan set 1 defgw ipaddr Default_gateway
```

     b. To restore the BMC configuration to use DHCP to obtain an IP, netmask, and gateway, enter the following command:

```
run-host-command ipmitool lan set 1 ipsrc dhcp
```

9. After restoring BMC network connectivity, connect to the BMC interface to audit and restore any additional custom BMC configuration you might have applied. For example, you should confirm the settings for SNMP trap destinations and email notifications. See Configure BMC interface.
10. Confirm that the appliance node appears in the Grid Manager and that no alerts appear.

After replacing the part, return the failed part to NetApp, as described in the RMA instructions shipped with the kit. See the Parts Return & Replacements page for further information.

Replace E4000 storage controller (SG6260)

You might need to replace an E4000 controller if it is not functioning optimally or if it has failed.

About this task

You can determine if you have a failed controller in two ways:

- A Grid Manager alert indicates a storage controller failure condition, and Grid Manager or the Recovery Guru in SANtricity System Manager direct you to replace the controller.

- The amber Attention LED on the controller is on, indicating that the controller has a fault.

> If both controllers in the shelf have their Attention LEDs on, contact technical support for assistance.

If your appliance contains two storage controllers, you can replace one of the controllers while your appliance is powered on and performing read/write operations, as long as the following conditions are true:

- The second controller in the shelf has Optimal status.
- The **OK to remove** field in the Details area of the Recovery Guru in SANtricity System Manager displays **Yes**, indicating that it is safe to remove this component.

> When possible, place the appliance into maintenance mode for this replacement procedure to minimize the potential impact of unforeseen errors or failures.

> If the second controller in the shelf does not have Optimal status or if the Recovery Guru indicates that it is not OK to remove the controller, contact technical support.

Before you begin

- You have a replacement controller with the same part number as the controller you are replacing.
- You have labels to identify each cable that is connected to the controller.
- You have an ESD wristband, or you have taken other antistatic precautions.
- You have a #1 Phillips screwdriver.
- You have physically located the storage appliance where you are replacing the controller in the data center.

> Don’t rely on the E-Series instructions to replace a controller in the StorageGRID appliance, because the procedures aren’t the same.

Step 1: Prepare the replacement controller

Prepare the replacement E4000 controller.

Steps

1. Unpack the new controller, and set it on a flat, static-free surface.

   Save the packing materials to use when shipping the failed controller.

2. Locate the MAC address and FRU part number labels on the back of the replacement controller.

Step 2: Take the controller offline

Prepare to remove the failed controller and take it offline. You can use SANtricity System Manager to perform these steps.

Steps

1. Confirm that the replacement part number for the failed controller is the same as the FRU part number for the replacement controller.

   When a controller has a fault and needs to be replaced, the replacement part number is displayed in the Details area of the Recovery Guru. If you need to find this number manually, you can look on the **Base** tab

for the controller.

> **Possible loss of data access —** If the two part numbers aren't the same, don't attempt this procedure.

2. Back up the configuration database.

   If a problem occurs when you remove a controller, you can use the saved file to restore your configuration. The system will save the current state of the RAID configuration database, which includes all data for volume groups and disk pools on the controller.

   a. Select **Support › Support Center › Diagnostics**.
   b. Select **Collect Configuration Data**.
   c. Click **Collect**.

      The file is saved in the Downloads folder for your browser with the name, **configurationData-<arrayName>-<dateTime>.7z**.

3. Collect support data for the appliance.

   > Collecting support data before and after replacing a component ensures you can send a full set of logs to technical support if the replacement does not resolve the problem.

   If a problem occurs when you remove a controller, you can use the saved file to troubleshoot the issue. The system will save inventory, status, and performance data about your storage array in a single file.

   a. **Select Support › Support Center › Diagnostics**.
   b. Select **Collect Support Data**.
   c. Click **Collect**.

4. Take the controller you plan to replace offline.

Step 3: Remove controller canister

Remove a controller canister.

Steps

1. Put on an ESD wristband or take other antistatic precautions.
2. Label each cable that is attached to the controller canister.
3. Disconnect all the cables from the controller canister.

   > To prevent degraded performance, do not twist, fold, pinch, or step on the cables.

4. Squeeze the latch on the cam handle until it releases, open the cam handle fully to release the controller canister from the midplane, and then, using two hands, pull the controller canister out of the chassis.
5. Place the controller on a flat, static-free surface with the removable cover facing up.
6. Open the cover by pressing the blue buttons on the sides of the controller canister to release the cover, and then rotate the cover up and off of the controller canister.

Step 4: Determine parts to transfer to replacement controller

Your replacement controller may come with parts pre-installed. Determine which parts must be transferred to the replacement controller canister.

1. Place the replacement controller on a flat, static-free surface with the removable cover facing up.
2. Open the cover by pressing the blue buttons on the sides of the controller canister to release the cover, and then rotate the cover up and off of the controller canister.
3. Determine if the replacement controller contains a battery and/or DIMMs. If it does, reinstall the controller cover and go to Step 8: Replace controller. Otherwise:
   - If the replacement controller does not include a battery or DIMM, go to Step 5: Remove the battery.
   - If the replacement controller includes a battery but not a DIMM, go to Step 6: Move the DIMMs.

Step 5: Remove the battery

Remove the battery from the impaired controller and install it in the replacement controller if necessary.

Steps

1. Remove the battery from the controller canister:
   a. Press the blue button on the side of the controller canister.
   b. Slide the battery up until it clears the holding brackets, and then lift the battery out of the controller canister.
   c. Unplug the battery plug by squeezing the clip on the face of the battery plug to release the plug from the socket, and then unplug the battery cable from the socket.

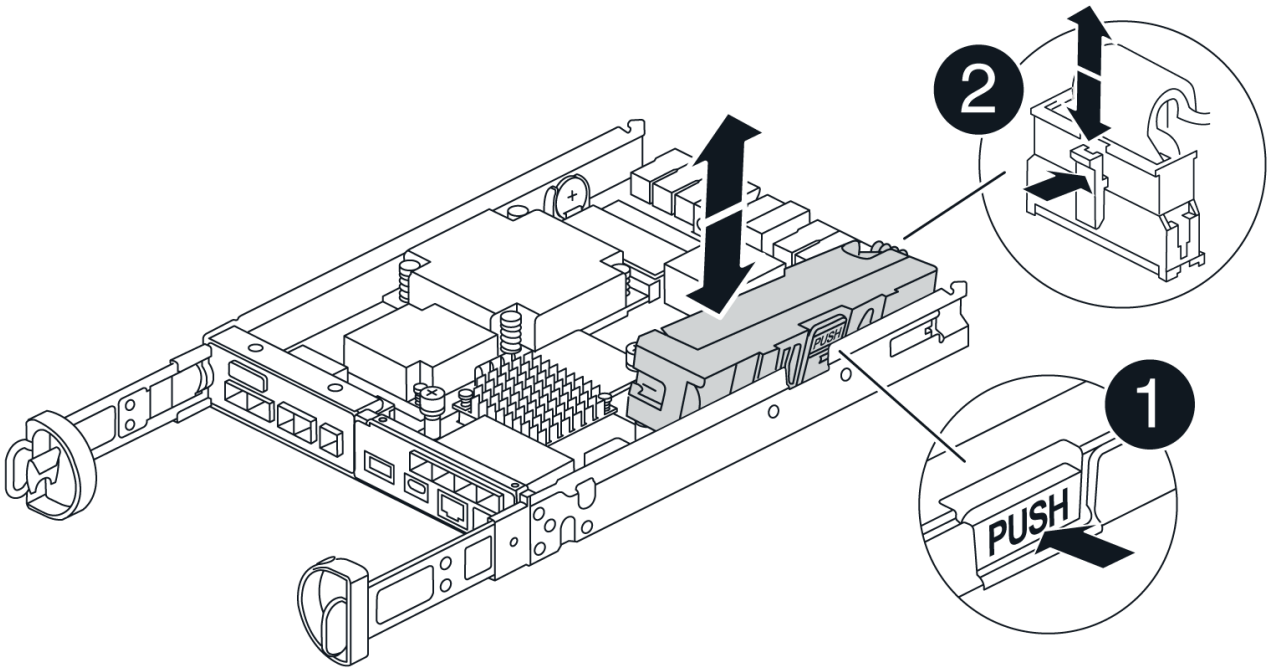

1	Battery release tab
2	Battery power connector

2. Move the battery to the replacement controller canister and install it:

a. Align the battery with the holding brackets on the sheet metal side wall, but do not connect it. You will plug it in once the rest of the components are moved to the replacement controller canister.

3. If the replacement controller has pre-installed DIMMs, go to Step 7: Install the battery. Otherwise, continue to the next step.

Step 6: Move the DIMMs

Remove the DIMMs from the impaired controller canister and install them into the replacement controller canister.

Steps

1. Locate the DIMMs on your controller canister.

> Note the location of the DIMM in the sockets so that you can insert the DIMM in the same location in the replacement controller canister and in the proper orientation.
> Remove the DIMMs from the impaired controller canister:

a. Eject the DIMM from its slot by slowly pushing apart the two DIMM ejector tabs on either side of the DIMM.

   The DIMM will rotate up a little.

b. Rotate the DIMM as far as it will go, and then slide the DIMM out of the socket.

> Carefully hold the DIMM by the edges to avoid pressure on the components on the DIMM circuit board.

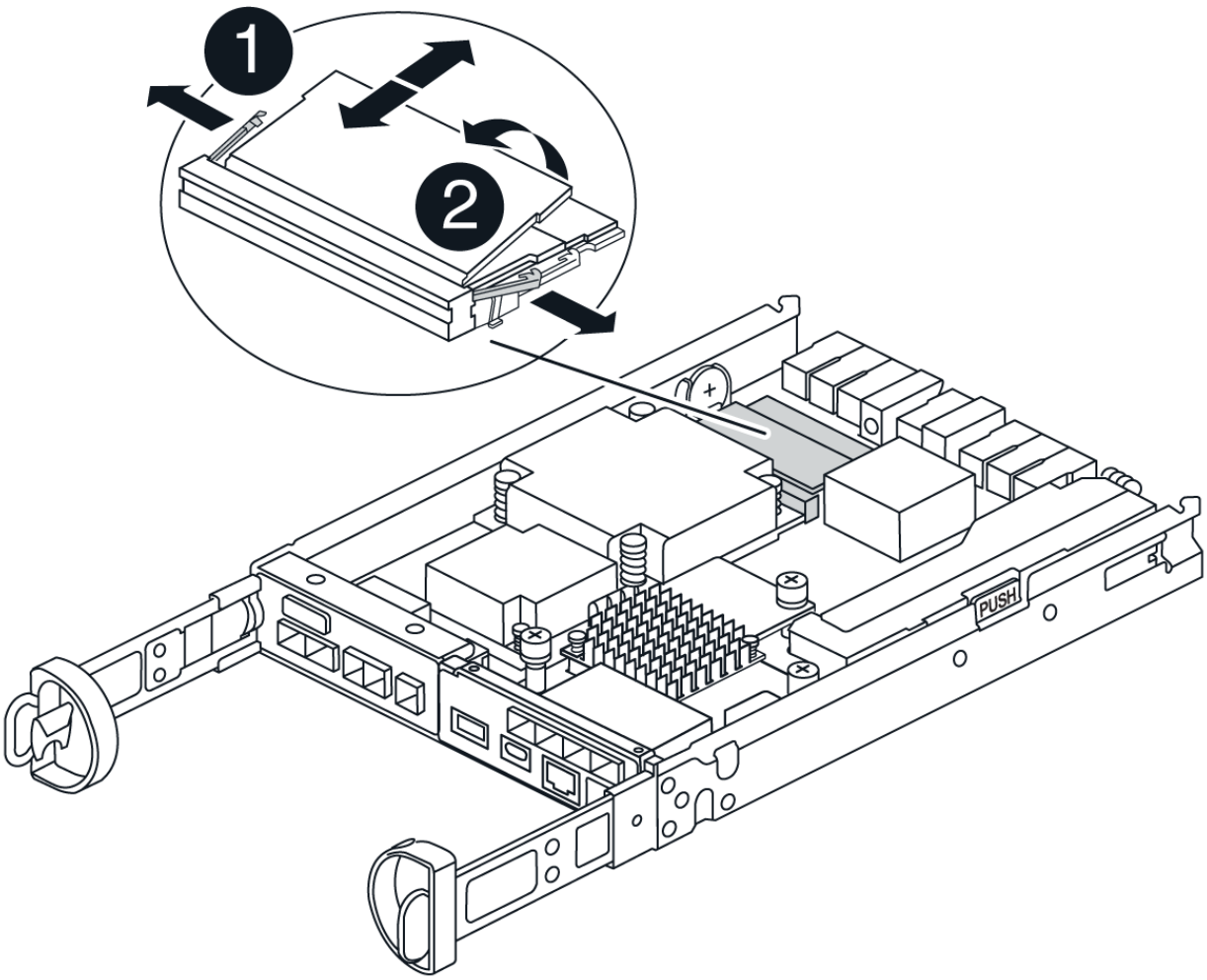

1	DIMM ejector tabs
2	DIMMS

2. Verify that the battery is not plugged into the replacement controller canister.
3. Install the DIMMs in the replacement controller in the same place they were in the impaired controller:
   a. Push carefully, but firmly, on the top edge of the DIMM until the ejector tabs snap into place over the notches at the ends of the DIMM.

      The DIMM fits tightly in the slot, but should go in easily. If not, realign the DIMM with the slot and reinsert it.

      Visually inspect the DIMM to verify that it is evenly aligned and fully inserted into the slot.
4. Repeat these steps for the other DIMM.
5. If the replacement controller has a pre-installed battery, go to Step 8: Replace controller. Otherwise, continue to the next step.

Step 7: Install the battery

Install the battery into the replacement controller canister.

Steps

1. Plug the battery plug back into the socket on the controller canister.

   Make sure that the plug locks down into the battery socket on the motherboard.

2. Aligning the battery with the holding brackets on the sheet metal side wall.
3. Slide the battery pack down until the battery latch engages and clicks into the opening on the side wall.
4. Reinstall the controller canister cover and lock it into place.

Step 8: Replace controller

Install the replacement controller and verify that the node has rejoined the grid.

Steps

1. Install the replacement controller into the appliance.
   a. Turn the controller over, so that the removable cover faces down.
   b. With the cam handle in the open position, slide the controller all the way into the appliance.
   c. Move the cam handle to the left to lock the controller in place.
   d. Replace the cables.
   e. If the original controller used DHCP for the IP address, locate the MAC address on the label on the back of the replacement controller. Ask your network administrator to associate the DNS/network and IP address for the controller you removed with the MAC address for the replacement controller.

   > If the original controller did not use DHCP for the IP address, the new controller will adopt the IP address of the controller you removed.

2. Bring the controller online using SANtricity System Manager:
   a. Select **Hardware**.
   b. If the graphic shows the drives, select **Controllers & Components**.
   c. Select the controller you want to place online.
   d. Select **Place Online** from the context menu, and confirm that you want to perform the operation.
3. As the controller boots, check the controller LEDs.
   - The amber Attention LED on the controller turns on and then turns off, unless there is an error.
   - The Host Link LEDs might be on, blinking, or off, depending on the host interface.
4. When the controller is back online, confirm that its status is Optimal and check the controller shelf's Attention LEDs.

   If the status is not Optimal or if any of the Attention LEDs are on, confirm that all cables are correctly seated and the controller canister is installed correctly. If necessary, remove and reinstall the controller canister.

   > If you cannot resolve the problem, contact technical support.

5. If required, redistribute all volumes back to their preferred owner using SANtricity System Manager.
   a. Select **Storage › Volumes**.

b. Select **More › Redistribute volumes**.

6. Collect support data for your storage array using SANtricity System Manager.
   a. Select **Support › Support Center › Diagnostics**.
   b. Select **Collect Support Data**.
   c. Click **Collect**.

      The file is saved in the Downloads folder for your browser with the name, **support-data.7z**.

7. If you placed the appliance in maintenance mode during this procedure, exit maintenance mode and wait for the node to reboot and rejoin the grid. This process can take up to 20 minutes. To confirm that the reboot is complete and that the node has rejoined the grid:
   a. In the Grid Manager, select **Nodes**.
   b. Verify that the appliance node has a normal status (green check mark icon to the left of the node name), which indicates that no alerts are active and the node is connected to the grid.

What's next?

Your controller replacement is complete. You can resume normal operations.

After replacing the part, return the failed part to NetApp, as described in the RMA instructions shipped with the kit. See the Parts Return & Replacements page for further information.

Relocate SGF6212 or SG6200-CN in cabinet or rack

Remove the SGF6212 or SG6200-CN from a cabinet or rack to access the top cover or to move the appliance to a different location, then reinstall the appliance into a cabinet or rack when hardware maintenance is complete.

Remove SGF6212 or SG6200-CN from cabinet or rack

Before you begin

- You have labels to identify each cable that is connected to the SGF6212 or SG6200-CN.
- You have physically located the SGF6212 or SG6200-CN where you are performing maintenance in the data center.
- You have shut down the SGF6212 or SG6200-CN.

> Don't shut down the appliance using the power switch.

Steps

1. Label and then disconnect the appliance power cables.
2. Wrap the strap end of the ESD wristband around your wrist, and secure the clip end to a metal ground to prevent static discharge.
3. Label and then disconnect the appliance data cables and any SFP+ or SFP28 transceivers.

   > To prevent degraded performance, don't twist, fold, pinch, or step on the cables.

4. Loosen the two captive screws on the appliance front panel.

5. Slide the SGF6212 or SG6200-CN forward out of the rack until the mounting rails are fully extended and you hear the latches on both sides click.

   The appliance top cover is accessible.

6. Optional: If you are fully removing the appliance from the cabinet or rack, follow the instructions for the rail kit to remove the appliance from the rails.

After replacing the part, return the failed part to NetApp, as described in the RMA instructions shipped with the kit. See the Parts Return & Replacements page for further information.

Reinstall SGF6212 or SG6200-CN into cabinet or rack

Before you begin

You have reinstalled the appliance cover.

Steps

1. Press the blue rail releases both rack rails at the same time and slide the SGF6212 or SG6200-CN into the rack until it is fully seated.

   When you can’t move the controller any further, pull the blue latches on both sides of the chassis to slide the controller all the way in.

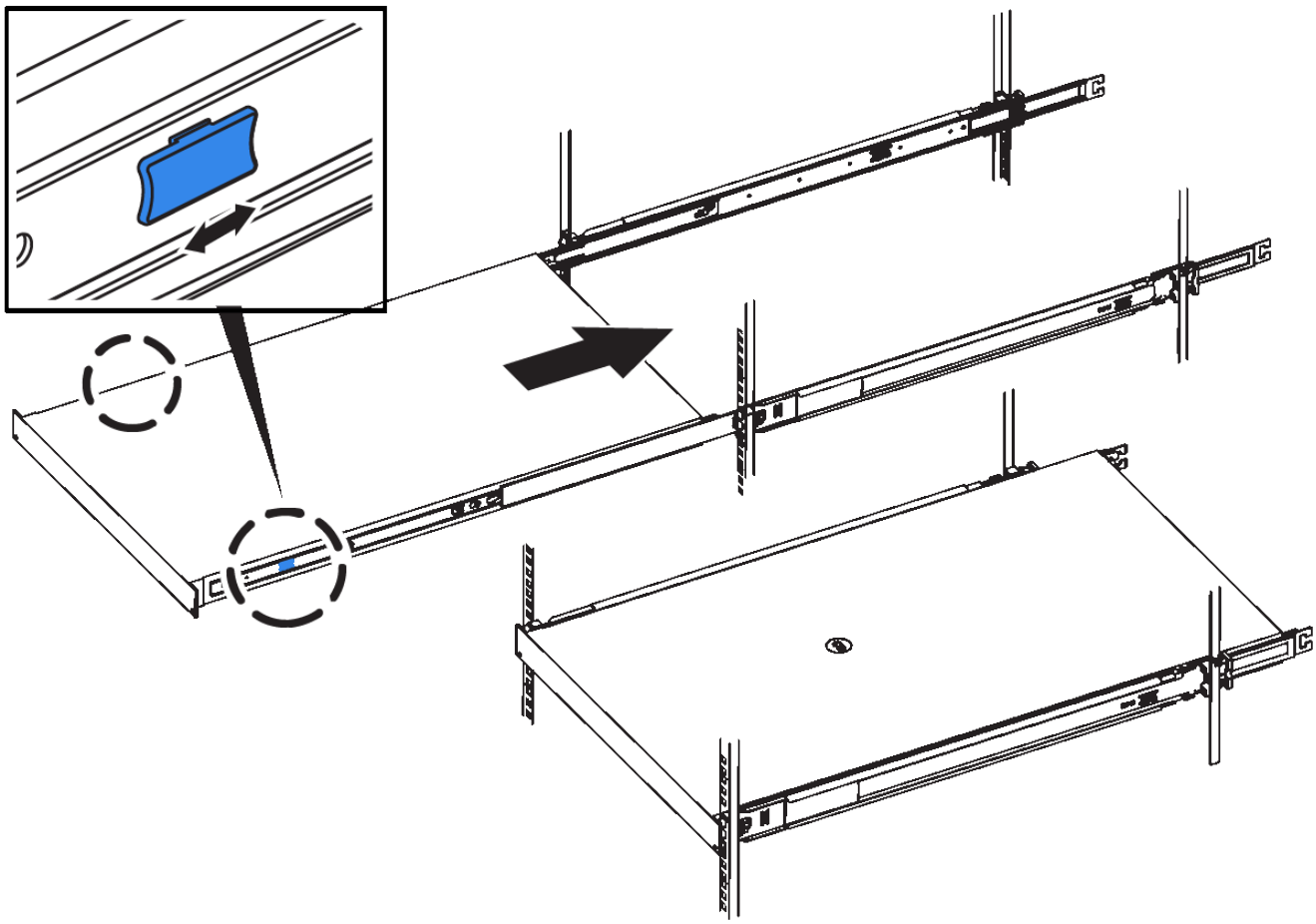

Don’t attach the front bezel until after you power on the controller.

2. Tighten the captive screws on the controller front panel to secure the controller in the rack.

3. Wrap the strap end of the ESD wristband around your wrist, and secure the clip end to a metal ground to prevent static discharge.
4. Reconnect the controller data cables and any SFP+, SFP28, QSFP+, QSFP28, or QSFP56 transceivers.

To prevent degraded performance, don’t twist, fold, pinch, or step on the cables.

5. Reconnect the controller power cables.

After you finish

Restart the appliance.

Copyright information

Copyright © 2026 NetApp, Inc. All Rights Reserved. Printed in the U.S. No part of this document covered by copyright may be reproduced in any form or by any means—graphic, electronic, or mechanical, including photocopying, recording, taping, or storage in an electronic retrieval system—without prior written permission of the copyright owner.

Software derived from copyrighted NetApp material is subject to the following license and disclaimer:

THIS SOFTWARE IS PROVIDED BY NETAPP “AS IS” AND WITHOUT ANY EXPRESS OR IMPLIED WARRANTIES, INCLUDING, BUT NOT LIMITED TO, THE IMPLIED WARRANTIES OF MERCHANTABILITY AND FITNESS FOR A PARTICULAR PURPOSE, WHICH ARE HEREBY DISCLAIMED. IN NO EVENT SHALL NETAPP BE LIABLE FOR ANY DIRECT, INDIRECT, INCIDENTAL, SPECIAL, EXEMPLARY, OR CONSEQUENTIAL DAMAGES (INCLUDING, BUT NOT LIMITED TO, PROCUREMENT OF SUBSTITUTE GOODS OR SERVICES; LOSS OF USE, DATA, OR PROFITS; OR BUSINESS INTERRUPTION) HOWEVER CAUSED AND ON ANY THEORY OF LIABILITY, WHETHER IN CONTRACT, STRICT LIABILITY, OR TORT (INCLUDING NEGLIGENCE OR OTHERWISE) ARISING IN ANY WAY OUT OF THE USE OF THIS SOFTWARE, EVEN IF ADVISED OF THE POSSIBILITY OF SUCH DAMAGE.

NetApp reserves the right to change any products described herein at any time, and without notice. NetApp assumes no responsibility or liability arising from the use of products described herein, except as expressly agreed to in writing by NetApp. The use or purchase of this product does not convey a license under any patent rights, trademark rights, or any other intellectual property rights of NetApp.

The product described in this manual may be protected by one or more U.S. patents, foreign patents, or pending applications.

LIMITED RIGHTS LEGEND: Use, duplication, or disclosure by the government is subject to restrictions as set forth in subparagraph (b)(3) of the Rights in Technical Data -Noncommercial Items at DFARS 252.227-7013 (FEB 2014) and FAR 52.227-19 (DEC 2007).

Data contained herein pertains to a commercial product and/or commercial service (as defined in FAR 2.101) and is proprietary to NetApp, Inc. All NetApp technical data and computer software provided under this Agreement is commercial in nature and developed solely at private expense. The U.S. Government has a non-exclusive, non-transferrable, nonsublicensable, worldwide, limited irrevocable license to use the Data only in connection with and in support of the U.S. Government contract under which the Data was delivered. Except as provided herein, the Data may not be used, disclosed, reproduced, modified, performed, or displayed without the prior written approval of NetApp, Inc. United States Government license rights for the Department of Defense are limited to those rights identified in DFARS clause 252.227-7015(b) (FEB 2014).

Trademark information

NETAPP, the NETAPP logo, and the marks listed at http://www.netapp.com/TM are trademarks of NetApp, Inc. Other company and product names may be trademarks of their respective owners.